Sept. 17, 1929. L. ANTONELLI 1,728,321

ROTARY PUMP

Filed Oct. 25, 1926

FIG 1

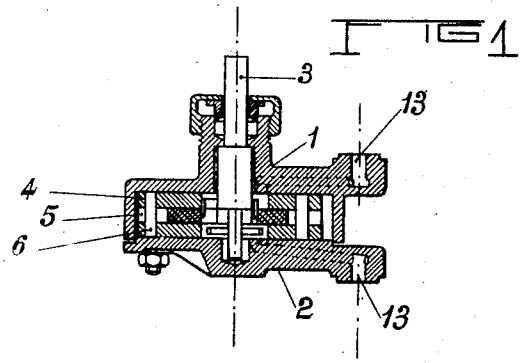

FIG 2

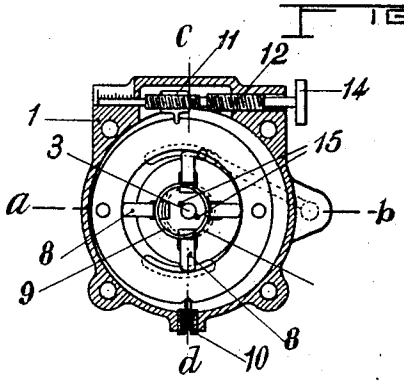

FIG 3

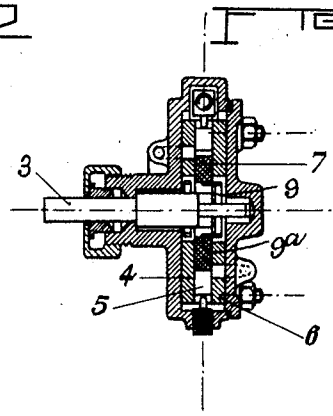

FIG 4

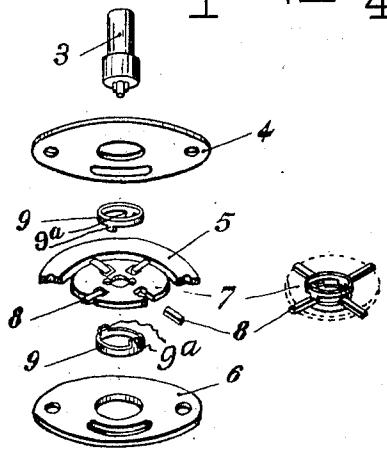

L. Antonelli
INVENTOR

By Marks & Clerk
ATTYS.

Patented Sept. 17, 1929 1,728,321

UNITED STATES PATENT OFFICE

LEONIDA ANTONELLI, OF BOLOGNA, ITALY

ROTARY PUMP

Application filed October 25, 1926, Serial No. 144,072, and in Italy October 31, 1925.

This invention relates to improvements in rotary pumps and more particularly to pumps of the type especially designed for comparatively light duty.

The invention has for its object to provide a pump embodying such features of construction as will permit its capacity being varied according to the requirements.

A further object is the provision of a pump embodying such features of structural simplicity and compactness as will adapt it to be manufactured in very reduced sizes suitable for fulfilling special needs.

In the accompanying drawing:

Fig. 1 is a section on the line *a*—*b* of Fig. 2.

Fig. 2 is a section taken at right angles of Fig. 1.

Fig. 3 is a section on the line *c*—*d* of Fig. 2.

Fig. 4 is a detail view of the various parts of the pump separated.

The improved pump includes a cylinder 1 having an open side normally closed by a cover plate 2. The cover plate and body are provided with openings 13 for the inlet and discharge of the pump fluid, and the shaft 3 is rotatably supported in the body. The rotor 7 is keyed to the shaft 3 by the pins 15.

Within the body there are arranged three discs, 4, 5 and 6 within which the rotor 7 is enclosed, the discs 4 and 6 constituting the side walls of the top chamber and the annular intermediate disc 5 constituting the periphery wall of said chamber.

Slidable pistons or vanes 8 are mounted in the radial slots in the rotor 7 and are normally maintained in engagement with the disc 5 by the tension of a pair of springs 9 disposed at either side of the rotor 7 and provided with diametrically opposed lateral extensions 9^a engaging in the slots of the rotor 7 behind the vanes 8. The ring at one side of the rotor engages two of the vanes 8, and the ring at the opposite side of the rotor engages and actuates the other two vanes. The spring is mounted for free movement within the interior of the pump, and the central apertures of the discs 4 and 6 are of sufficient size to permit of such movement, so that the spring rings may readily undergo the deformations necessary to maintain the vanes in outwardly projected positions.

The center disc 5 is engaged by a fulcrum pin 10 at the bottom of the body 1, whereby it may be radially shifted within said body to vary the eccentric relation of the ring and the shaft 3, and the desired adjustment of the disc 5 in this manner is effected by a collar 11 having a lug engaging said disc and a differential screw 12 operated from the exterior of the pump by means of a handle 14. By shifting the intermediate disc 5 radially with respect to the shaft 3 its excentric position is varied and also the capacity and pumping effect of the pump.

What is claimed is:

1. In a pump, a body having an internal chamber, a rotor journalled in said body, groups of opposed vanes movable in said rotor, and single spring elements coacting with the respective groups of vanes normally tending to displace the latter outwardly, said spring elements being of substantially annular form.

2. In a pump, a body having an internal chamber, a rotor journalled in said chamber, pairs of opposed vanes movable in said rotor and a single spring element acting on the vanes of each pair tending to displace the latter outwardly, the spring element acting on one pair of vanes being located at one side of the latter and the spring element acting on the other pair of vanes being located at the opposite side of the rotor.

3. In a pump, a body having an internal chamber, a rotor journalled in said chamber, pairs of opposed vanes movable in said rotor and a single spring element acting on the vanes of each pair tending to displace the latter outwardly, said spring elements being of substantially annular form and the element associated with one pair of vanes being located at one side of the element and the spring element associated with the other pair of vanes being located at the opposite side of the rotor.

4. In a pump, a body having an internal

chamber, a rotor journalled in said body, opposed vanes movable in said rotor, and single spring elements acting on both vanes normally tending to displace the latter outwardly, said spring elements being of substantially annular form, located laterally of the rotor and having lateral extensions engaged behind the vanes.

5. In a pump, a body having an internal chamber, a rotor journalled in said chamber, pairs of opposed vanes movable in said rotor and a single spring element acting on the vanes of each pair tending to displace the latter outwardly, and means for varying the excentric relation of the rotor to the interior of the body.

Signed at Milan, Italy this 12th day of Oct. 1926.

LEONIDA ANTONELLI.