J. T. PROUT.

SOUND REPRODUCING MACHINE.

APPLICATION FILED OCT. 18, 1913.

1,167,838. Patented Jan. 11, 1916.

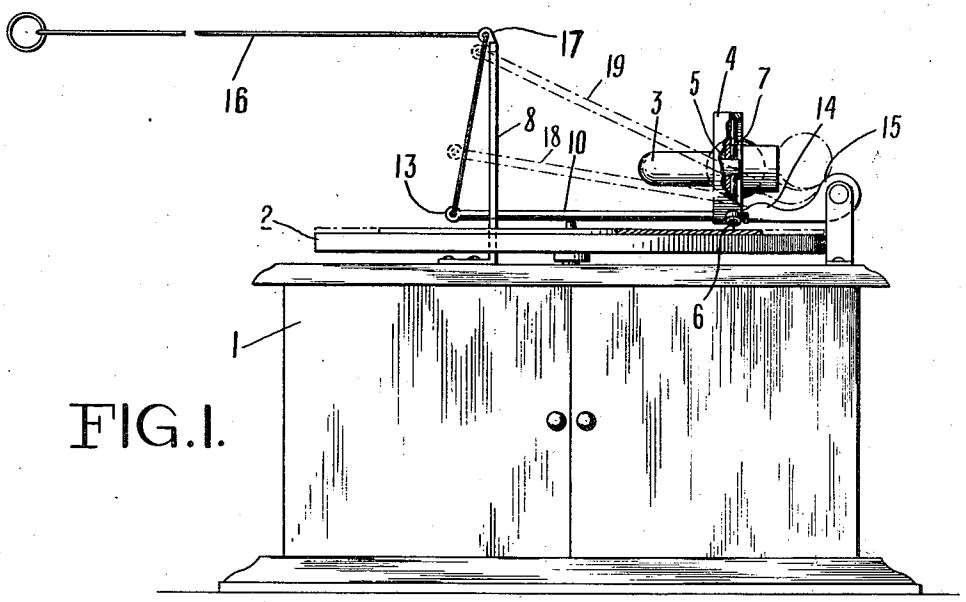


FIG. 1.

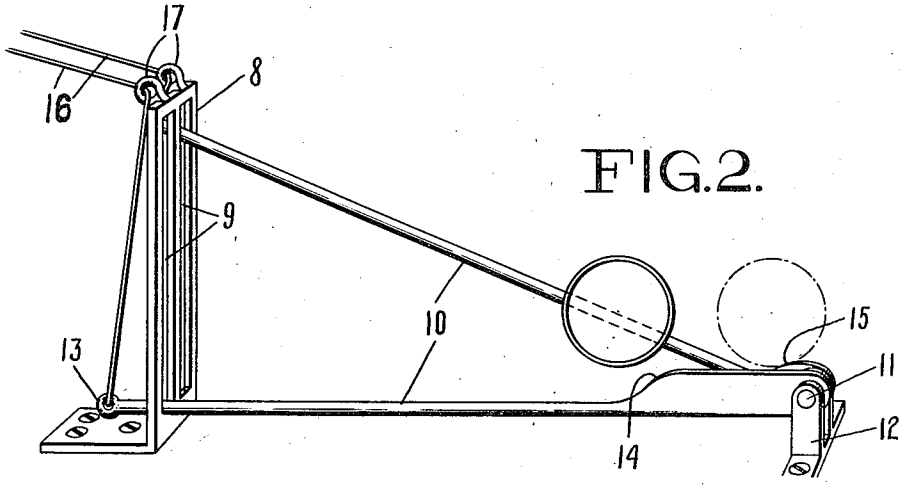


FIG. 2.

Witnesses:
Arthur Choquet.
Wm. C. Dunn

John T. Prout,
Inventor

By his Attorney
William P. Hammond

# UNITED STATES PATENT OFFICE.

JOHN T. PROUT, OF NEW YORK, N. Y.

## SOUND-REPRODUCING MACHINE.

1,167,838. Specification of Letters Patent. Patented Jan. 11, 1916.

Application filed October 18, 1913. Serial No. 795,846.

*To all whom it may concern:*

Be it known that I, JOHN T. PROUT, a citizen of the United States, residing at New York city, in the county of New York and State of New York, have invented certain new and useful Improvements in Sound-Reproducing Machines, of which the following, taken in connection with the accompanying sheet of drawings, is a full, clear, and concise description.

My present invention relates more particularly to certain improved attachments for sound reproducing machines, whereby said machines are rendered of greatly increased efficiency.

According to my invention, I am enabled after the inauguration of the operation of the machine to reset the tone arm so that the record in use may start anew. This may be accomplished irrespective of the distance that the stylus has traversed along the effective zone of the disk, that is to say—I may permit the record to be entirely played and then be repeated, or I may permit the record to be partially played and then return the stylus any predetermined distance and that portion already gone over be traversed again by the stylus. The mechanism whereby this is accomplished is of extreme simplicity and may be so designed as to be used in conjunction with records of varying diameters.

In the accompanying sheet of drawings, in which like reference characters are employed to designate like parts throughout the respective views: Figure 1 is a view in side elevation of a sound reproducing machine embodying the features of my invention. Fig. 2 is a detail perspective view showing the resetting mechanism.

In detail, 1 indicates the conventional form of sound reproducing machine which includes a rotating disk carrier 2, tone arm 3, sound box 4, containing a diaphragm 5 and a stylus carrier 6, all of which are of usual and well known construction.

According to my invention, a record partially or fully played may be replayed or started over again without manually lifting and resetting the tone arm, which requires considerable care. This is desirable where a favorite record is being played and it is desired to repeat it one or more times or where a portion of a given record is pleasing and it is desired to replay that portion. To accomplish this, I mount upon the stand or box 1, an upright 8. This upright is provided with one or more slots or guide eyes 9, in which a resetting arm 10 is guided in its vertical movement. The resetting arm 10, supported on a pivot 11 is journaled in a standard 12, the latter mounted fast or supported on a relatively different part of the box 1. The arm 10 is positioned beneath the tone arm 3 permitting the latter to move in traversing the record. In operation the tone arm is moved back to its initial starting position by its engagement with the arm 10. This is accomplished by the means of a pull string 16 which is threaded through a suitable guide eye 17 at the top of the support 8 one end being fast to the end 13 of the resetting arm 10. A pull upon string 16 causes the resetting arm 10 to oscillate around its pivot 11 engaging the tone arm 3 raising it from the record or disk, and then guiding the same in its descent to the initial or starting point which it reaches through gravity. As explained, this can be performed at any point desired during the traversing of the record by the stylus. The guide arm 10 is provided with a stop portion 14 or 15 which arrests the downward movement of the tone arm at the proper starting position with respect to the effective zone of the record. Where a record of small diameter is used, the reset arm is provided with a stop portion similar to that of 14 and where a record of larger diameter is used the reset arm is provided with a stop portion similar to 15, the latter permitting a greater descent of the tone arm in its resetting movement.

In order that my resetting mechanism may be adapted to coöperate with sound records of different diameters, I may provide two resetting pivoting members, each provided with a limiting stop so positioned with respect to the outer circumference of the record that it will bring the sound arm to rest with the stylus at the outer or first groove of said record, or I may as shown in Fig. 1 provide a single pivoted arm with differential stops so that by imparting different degrees of movement to the pivoted member, the tone arm will through gravity be forced to move the proper distances; for instance, by exerting a partial pull on the draw string, the pivoted member will ascend to its first dotted position indicated at 18; by exerting a further pull on the draw string, the pivoted member will ascend to

the dotted position indicated at 19. Of course, when the pivoted member ascends the tone arm likewise descends until the stylus engages the first groove of the sound record.

Of course, it will be understood that various changes and modifications may readily be resorted to without departing from the spirit and scope of the invention. For instance, for the purpose of greater strength and rigidity, a bridge-like formation may be imparted to the support, instead of using a single upright such as illustrated and where the shank holding the needle is not rigid, a double clamp may be employed.

Other similar details and changes may also be employed or equivalents used and still be within the scope of the following claims.

Having thus described my invention, what I claim as new herein and desire to secure by Letters Patent is:

1. A resetter for sound producing machines comprising in combination with the sound arm and stylus, a pivoted member, a vertical supporting guide, and a pull member fastened to the pivoted member and cooperating with the vertical supporting guide to oscillate the pivoted member enabling the latter to raise the sound arm, to return the stylus through gravity to its point of beginning on the effective zone of the sound producing record.

2. A resetter for sound producing machines comprising a pivoted member provided with a limiting stop, a vertical guide support provided with a slot through which the pivoted member projects, a guide provided at the top of the vertical support, and an operating member connected to the pivoted member and threaded through the guide for operating the pivoted member, substantially as described.

3. A resetter for sound producing machines comprising, in combination with the sound arm and stylus, flexible means cooperating with the sound arm and capable of manipulation to return the stylus any desired distance at any time after the inauguration of its movement over the effective sound producing zone of the record at the will of the operator in order to repeat the portion of the record desired.

4. A resetter for sound producing machines comprising, in combination with the sound arm and stylus, a member coöperating with the sound arm, a flexible member coöperating with, and adapted to operate said first member and capable of manipulation to return the stylus any desired distance at any time after the inauguration of its movement over the effective sound producing zone of the record, at the will of the operator.

5. A resetter for sound producing machines comprising, in combination with the sound arm and stylus, a pivoted arm cooperatively associated with the sound arm, and a flexible member coöperating with the pivoted arm which, when manually operated, will return the sound arm and stylus any desired distance at the will of the operator to enable the stylus to retraverse any portion or all of the record over which the stylus has previously moved.

In witness whereof I have hereunto set my hand in the presence of two subscribing witnesses.

JOHN T. PROUT.

Witnesses:
ARTHUR CHOQUET,
ANNA KEELEY.