Nov. 11, 1958 F. S. NICOLL, JR 2,859,492

HORIZONTAL SLIDING WINDOW UNIT

Filed April 23, 1954

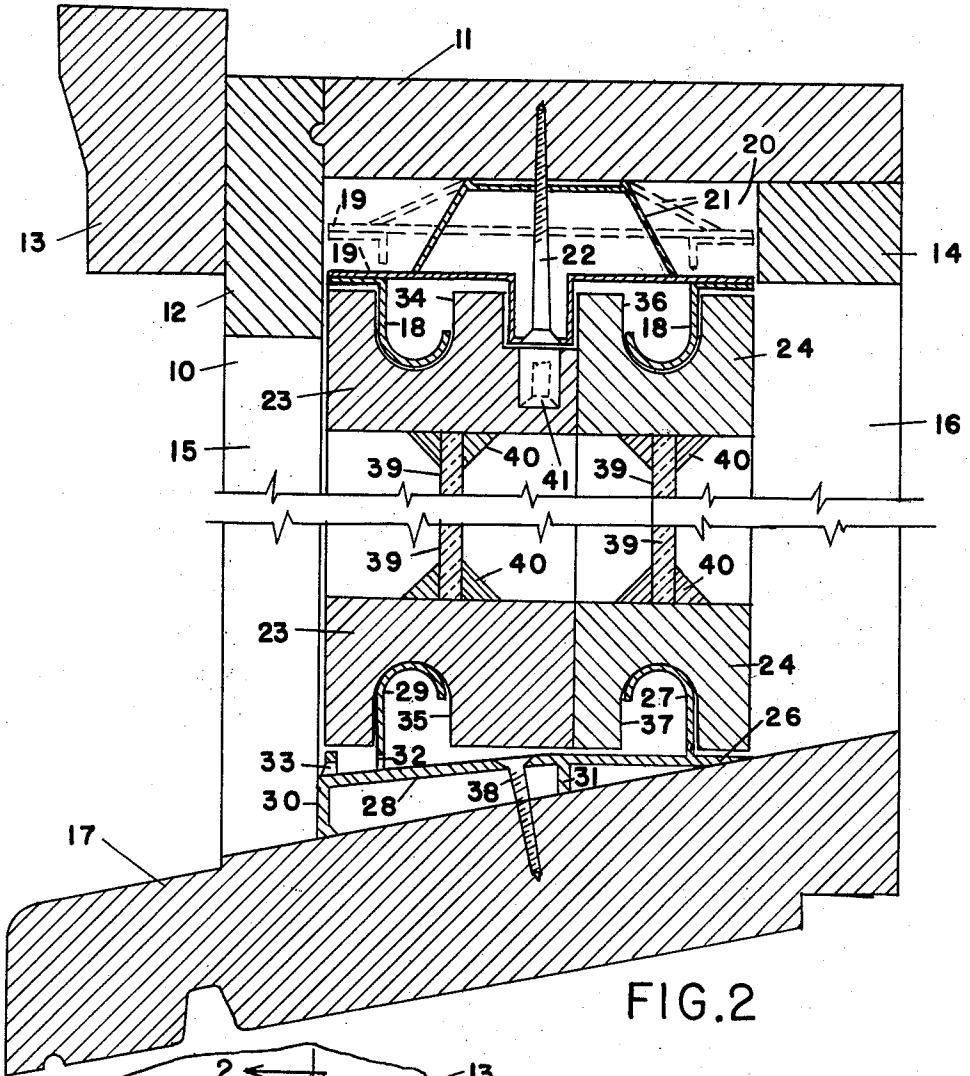

FIG. 2

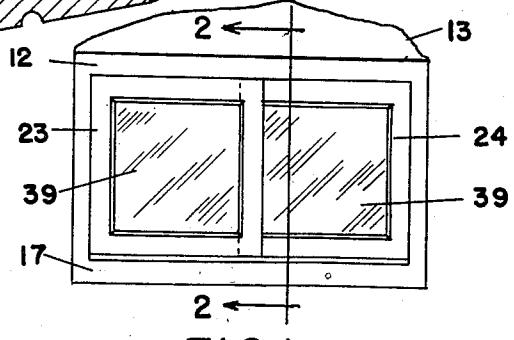

FIG. 1

FRANK S. NICOLL, JR.
INVENTOR.

BY Howard J. Whelan.
ATTORNEY

United States Patent Office 2,859,492 Patented Nov. 11, 1958

2,859,492

HORIZONTAL SLIDING WINDOW UNIT

Frank S. Nicoll, Jr., Baltimore, Md.

Application April 23, 1954, Serial No. 425,108

4 Claims. (Cl. 20—52.2)

This invention relates generally to window constructions and refers more particularly to improvements in a combined sash guide and weather strip for windows of the so-called horizontal sliding type.

It is an object of this invention to provide a combined sash guide and weather strip having guide parts for sliding engagement with the lower rails of an inner and outer sash, and similar sash guides mounted and forming part of a flexible tensioning member mounted to engage with the upper rails of said inner and outer sashes to enable the sashes to be removed.

It is an additional object of this invention to take the part of the double-hung sash that has been ploughed 5/8" x 5/8" on the side rails and turn them from a vertical to a horizontal position for reuse.

It is an additional object of this invention to provide a new and improved sash guide and weather strip for use in the head of a window frame backed by a retraction spring which permits the sash to be retracted back into the pocket formed in the window frame to receive the retraction spring and sash guide weather strip to clear the bottom sill and weather strip section for the removal of the sash from the window frame.

Other objects will become apparent as the invention is more fully set forth.

For a better understanding of the invention and its objects, reference is made to the accompanying drawings, which in conjunction with the following description outline a particular form of the invention by way of example, while the claims emphasize the scope thereof.

In the drawings:

Figure 1 is a front elevation of a horizontal sliding window unit, embodying this invention; and

Figure 2 is a sectional view taken along line 2—2 of Figure 1.

Similar reference characters refer to similar parts throughout the drawings.

In the drawings, **10** represents a window frame, comprising a head jamb **11**, a head blind stop **12**, a head brick mold **13** and a head stop **14**, side rails **15** and **16** and sill plate **17**. A full jamb head weather strip **18** of semi-looped construction is mounted on a plate **19** and is slidable therewith and mounted in a pocket **20** formed by the head jamb **11**, head blind stop **12** and head stop **14** and tensioned by a retraction spring and spacer **21** slidably attached to the head jamb **11** by a screw **22** to enable the outside sash **23** and inside sash **24** to be retracted back into the pocket **20** to clear the bottom sill weather strip and sash guide **25** to remove the sash from the window frame. The sill, weather strip and sash guide **25** is preferably formed as shown in the drawings and comprises a level plate **26** above which projects a semi-looped portion **27** that acts as a combination weather strip and sash guide for the lower end of the inside sash, as it rides back and forth. The levelling plate **26** extends outwardly and downwardly at **28** to form a support for another semi-looped portion **29** that also acts as a combination weather strip and sash guide for

the lower end of the outside sash to ride back and forth on during its travels. The front end **30** of the plate **26** is bent downwardly and forms a support for the front end **28** of the leveling plate **26**, an additional support **31** is affixed at the center of the plate **26** for better support, weep and drainage holes **32** and **33** are placed in the semi-looped portion **29** and upper end of plate **28** respectively. The outside sash **23** is provided with grooves **34** and **35** to receive the full jamb head weather strip **18** and semi-looped portion **29** respectively, and the inside sash **24** is provided with grooves **36** and **37** to receive the full jamb head weather strip **18** and semi-looped construction **27** as noted in the drawings. The sill, weather strip and sash guide **25** is preferably attached to the sill **17** by screws **38**.

While but one general form of the invention is shown in the drawings and described in the specification, it is not desired to limit this application for patent to this particular form as it is apreciated that other forms of construction could be made that would use the same principles and come within the scope of the appended claims.

Having thus described the invention, what is claimed is:

1. A structure comprising a window frame, an inside and an outside sash positioned therein for horizontal movement in said frame, each of said sashes having a recess formed in its upper and lower surfaces, a sash guide and weather strip secured to the sill of said window frame, said sash guide and weather strip including a metal leveling plate portion and a pair of parallel spaced projections whose upper ends are of semi-looped shape and extending one into each of the recesses in the lower surfaces of the inside and outside sashes, from said leveling plate portion, to support and guide said sashes in their movements in the window frame, said window frame and said inside and outside sashes, at their upper ends, being arranged to provide a pocket to receive a second sash guide and weather strip, said second sash guide and weather strip also being provided with a metal plate having a pair of parallel spaced projections extending downwardly therefrom, with the lower ends of said projections being of semi-looped shape and extending one into each of the recesses in the upper surfaces of the inside and outside sashes, a retraction spring and spacer mounted in said pocket on the upper surface of said second sash guide and weather strip and in engagement with the lower surface of the upper portion of the window frame for biasing the projections of said second sash guide and weather strip downwardly into said recesses in said sashes, whereby said inside and outside sashes can be moved upwardly to remove them from the window frame.

2. An arrangement as set forth in claim 1, in which the projection extending into the outer sash in the first sash guide and weather strip is provided with drainage holes.

3. An arrangement as set forth in claim 1, wherein said pocket is large enough to provide the required clearance to permit each sash to be raised above the projections extending into the recesses in the lower surfaces thereof to permit each sash to be raised above these projections from the window frame.

4. A sill plate for horizontally slidably mounting inner and outer sashes in a window frame having a downwardly and outwardly inclined sill, comprising an elongated metal member having inner and outer longitudinally extending, transversely spaced, upwardly projecting guide ribs of approximately like vertical height, inner and outer base wall portions extending in substantially coplanar relationship in opposite directions from the lower edge of said inner guide rib, an intermediate base wall portion

extending angularly downwardly from said outer base wall portion to the bottom edge of the adjacent inner side of said outer guide rib, another base wall portion extending laterally from the lower edge of the outside of said outer guide rib, and a leg depending from the outer edge of said other base wall portion, said leg and the inner edge of said inner base wall portion being adapted to be seated on an inclined sill of the aforesaid character to position said guide ribs with their top surfaces in a plane which is nearer to a horizontal plane than the top surface of such sill, wherein there is also provided a leg depending from a base wall portion intermediate said

guide ribs for seating on the sill of the window frame to additionally support said guide ribs.

References Cited in the file of this patent

UNITED STATES PATENTS

215,993	Townsend	May 27, 1879
920,158	Kurz	May 4, 1909
2,325,263	McMillan	July 27, 1943
2,337,633	Beil	Dec. 28, 1943
2,371,724	Young	Mar. 20, 1945
2,677,154	Agle	May 4, 1954