Feb. 22, 1944. F. SHURLEY 2,342,375

ROTARY SPRAYING MACHINE

Filed May 17, 1940 5 Sheets-Sheet 1

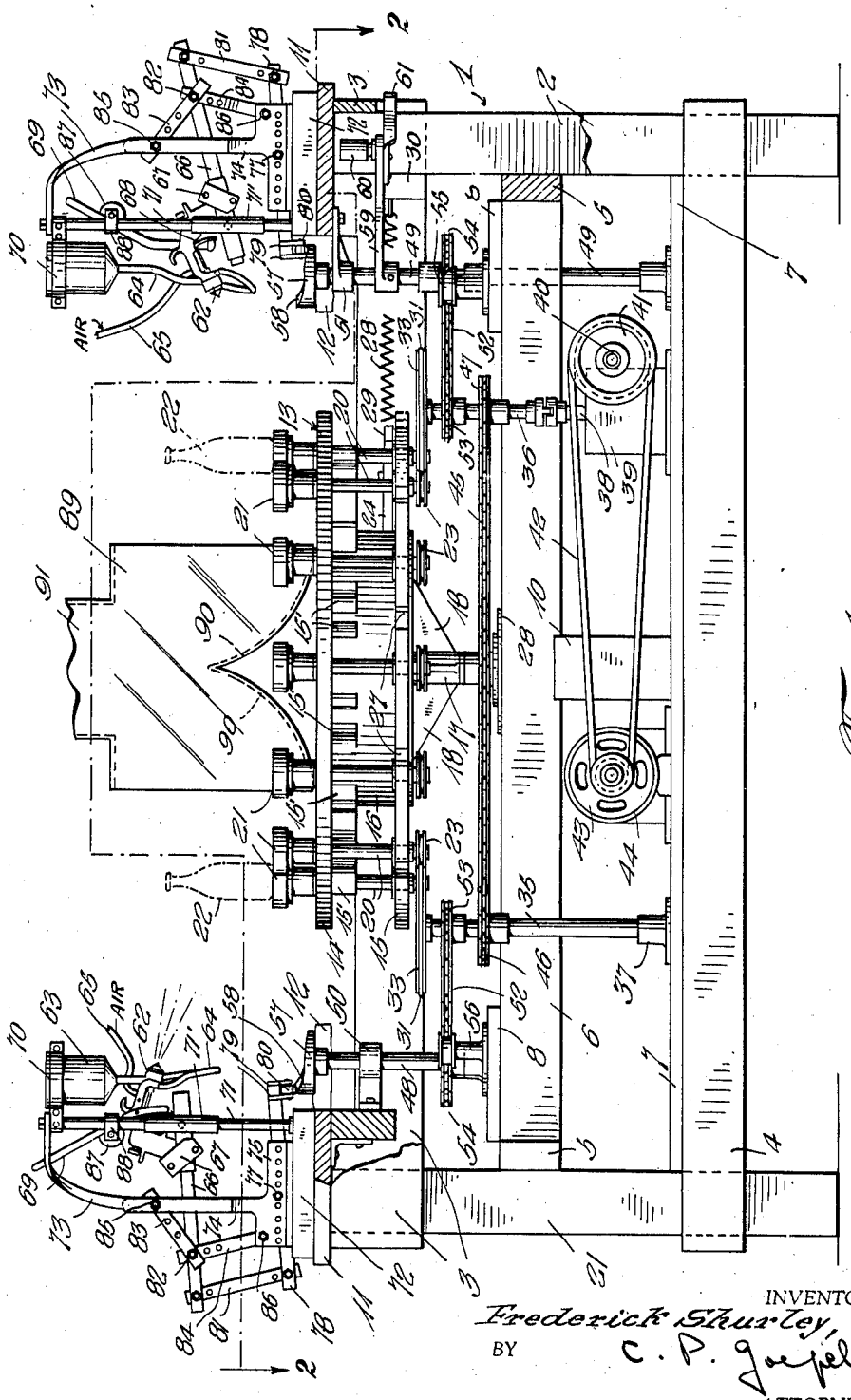

Fig. 1.

INVENTOR.
Frederick Shurley,
BY C. P. Goepel.
ATTORNEY

Feb. 22, 1944. F. SHURLEY 2,342,375

ROTARY SPRAYING MACHINE

Filed May 17, 1940 5 Sheets-Sheet 2

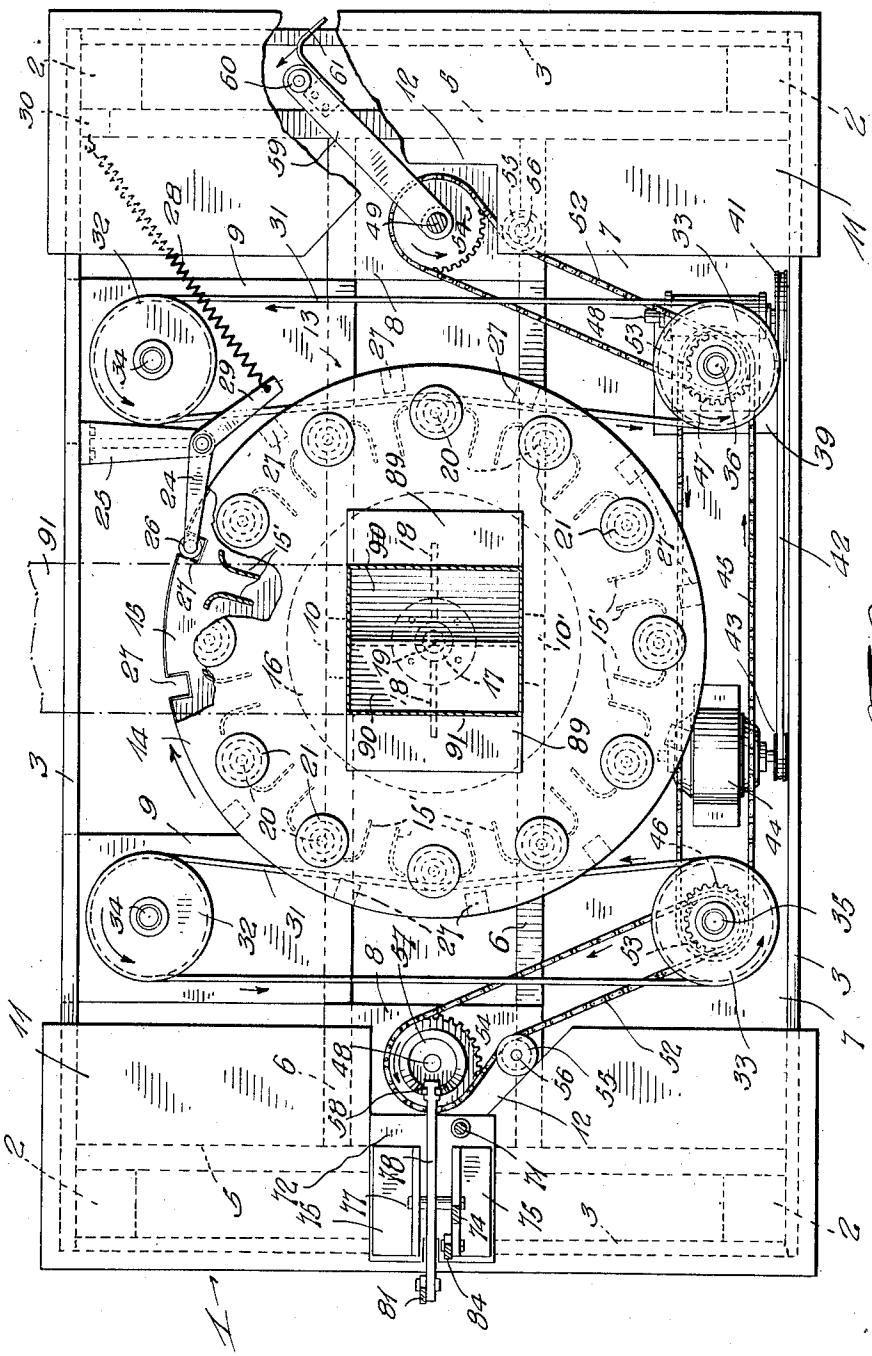

Fig 2.

INVENTOR.
Frederick Shurley,
BY
C. P. Goepel.
ATTORNEY.

Feb. 22, 1944. F. SHURLEY 2,342,375

ROTARY SPRAYING MACHINE

Filed May 17, 1940 5 Sheets-Sheet 3

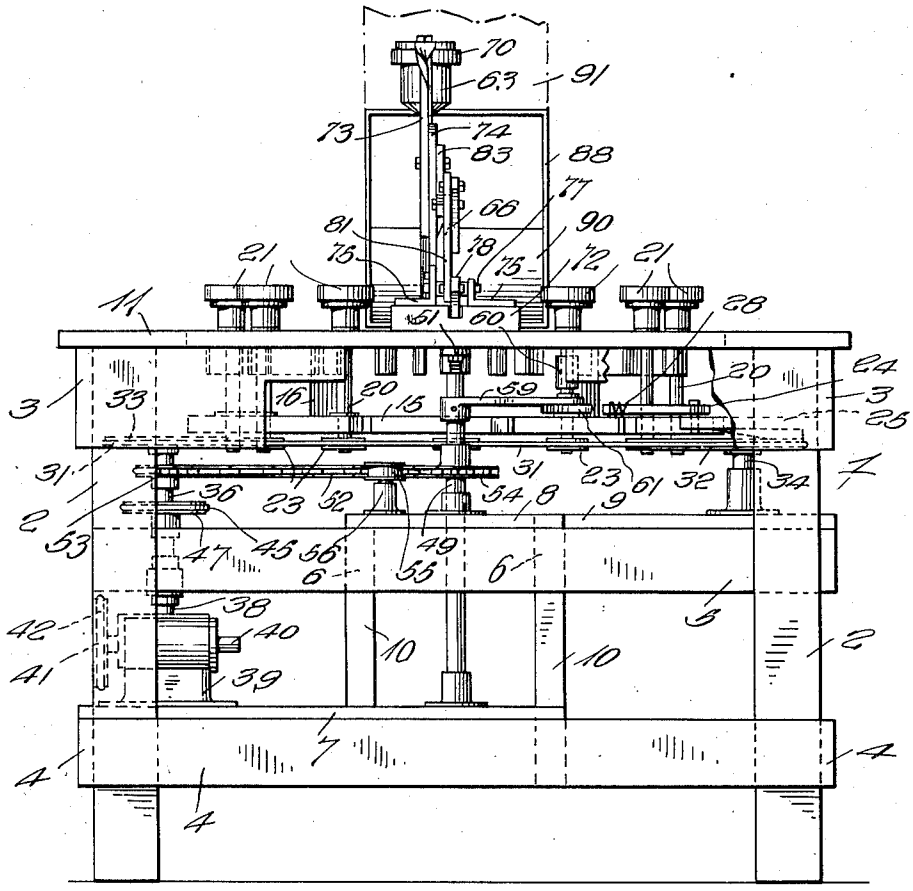

Fig. 3.

INVENTOR.
Frederick Shurley,
BY C. P. Goepel.
ATTORNEY.

Feb. 22, 1944. F. SHURLEY 2,342,375

ROTARY SPRAYING MACHINE

Filed May 17, 1940 5 Sheets-Sheet 4

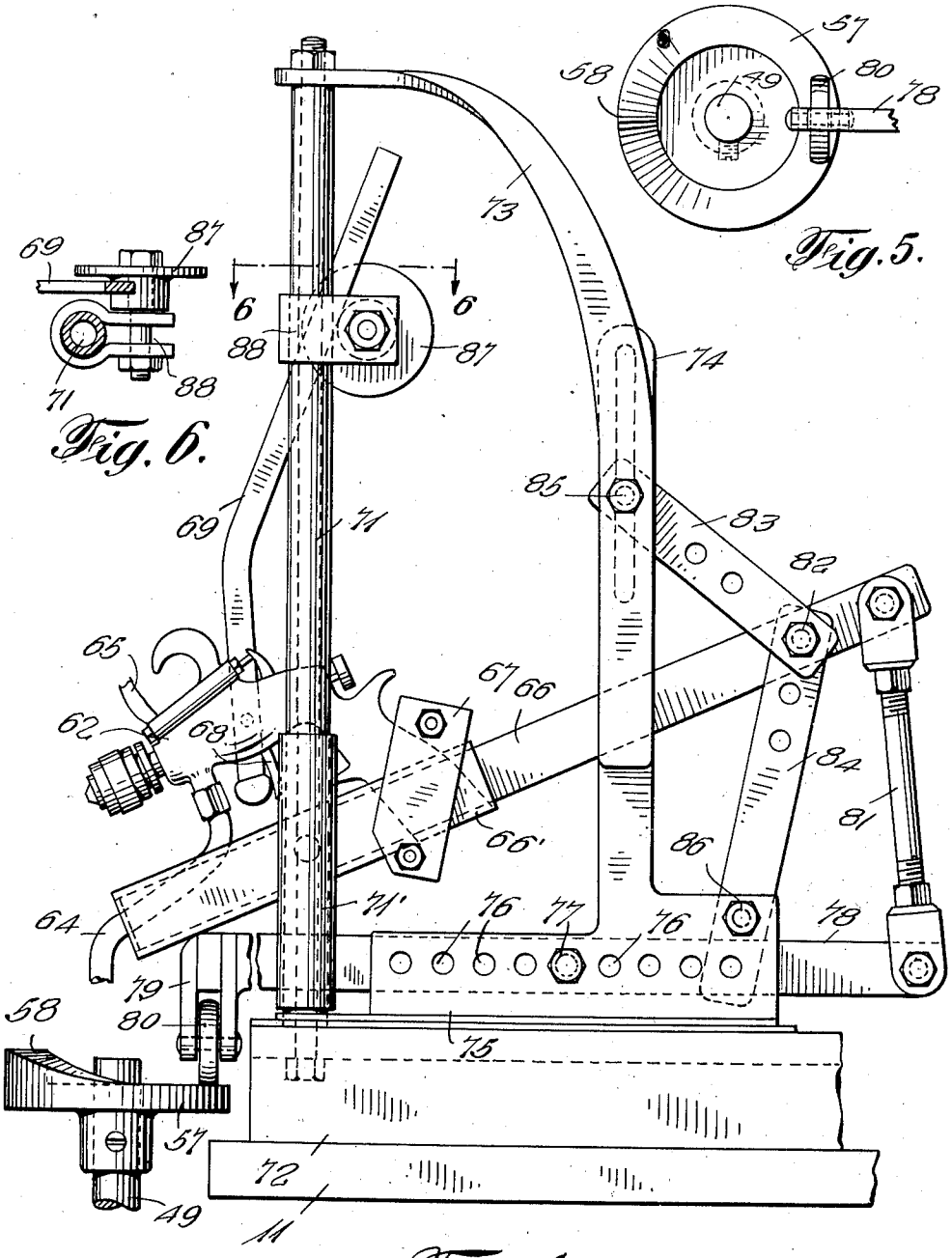

Fig. 5.

Fig. 6.

Fig. 4.

INVENTOR.
Frederick Shurley,
BY C. P. Goepel.
ATTORNEY.

Feb. 22, 1944. F. SHURLEY 2,342,375

ROTARY SPRAYING MACHINE

Filed May 17, 1940 5 Sheets-Sheet 5

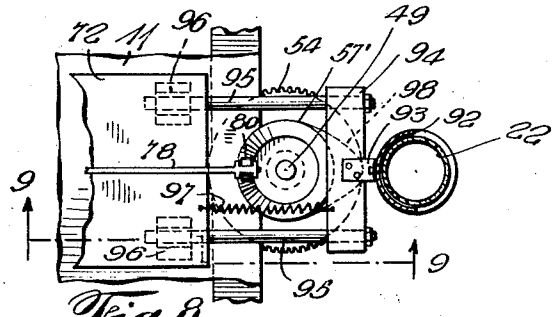

Fig. 8

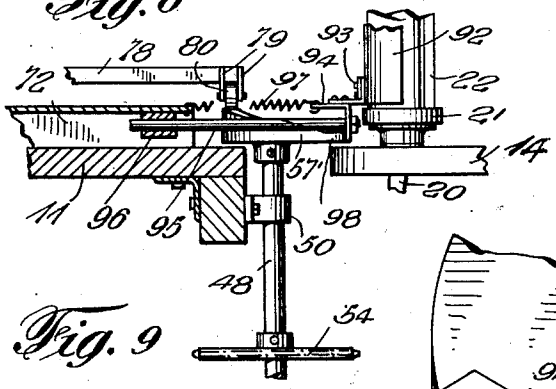

Fig. 9

Fig. 7

INVENTOR.
Frederick Shurley,
BY
ATTORNEY.

Patented Feb. 22, 1944

2,342,375

UNITED STATES PATENT OFFICE

2,342,375

ROTARY SPRAYING MACHINE

Frederick Shurley, Windsor, Ontario, Canada, assignor to Guthrie Ceramic Labelling & Machinery Co. Inc., Dover, Del., a corporation of Delaware

Application May 17, 1940, Serial No. 335,682

8 Claims. (Cl. 91—45)

This invention relates to a decorating machine and it is one object of the invention to provide a machine by means of which bottles, cans, jars and other cylindrical or substantially cylindrical objects may have a coating of paint or the like applied to them as a decoration.

Another object of the invention is to provide a machine of such construction, wherein the bottles or other objects to be decorated may be advanced in step by step movements toward a position or station where the coating material is applied to them, rotary motion being imparted to the objects at the said station in order that the paint or other decorating material may be applied entirely about the same.

Another object of the invention is to provide a machine of this character so constructed that when it is in operation a turntable carrying the objects will be intermittently turned at predetermined intervals to such an extent that the objects will be successively brought into position opposite a paint applying device which is intermittently rendered operative in such timed relation to movements of the turntable that paint will be applied to an object as the object arrives at the proper position or station in cooperating relation to the paint applying device.

Another object of the invention is to provide a machine of this character wherein the paint applying device consists of a spray gun having its trigger moved to effect discharge of paint from the gun when an object to be decorated is moved into position in front of the gun.

Another object of the invention is to provide the machine with object-holding pedestals rotatably mounted and driven by a belt when in front of the spray gun, there being also a cam for actuating the gun carried by a rotating post from which projects an arm for actuating a latch and releasing the turntable at the proper time to permit rotation of the turntable.

Another object of the invention is to provide shields so mounted that they are moved into and out of position to shield portions of the objects, thus allowing only a portion of the objects to be coated, it being understood that in a machine having two or more spray guns, shields of different sizes may be provided or the shield omitted at one of the coating stations so that the objects may have a multi-color decoration applied to them as they pass the stations during operation of the machine.

Another object of the invention is to provide a decorating machine which is comparatively simple in construction, strong and durable, and not liable to get out of order.

Other objects and advantages will become apparent from the accompanying drawings and following specification.

The invention is illustrated in the accompanying drawings wherein

Fig. 1 is a view showing the decorating machine partially in side elevation and partially in vertical section;

Fig. 2 is a view taken along the line 2—2 of Figure 1;

Figure 3 is a view in elevation looking at the right hand side of Figure 1;

Figure 4 is an enlarged view in elevation of a spray gun and its mounting and operating mechanism;

Figure 5 is a top plan view of a cam forming part of the mechanism shown in Figure 4;

Figure 6 is a fragmentary sectional view taken along the line 6—6 of Figure 4;

Figure 7 is a perspective view showing a shield held in covering relation to a bottle during decorating of the bottle;

Figure 8 is a top plan view of Figure 7 with the bottle and the shield in transverse section; and

Figure 9 is a view taken along the line 9—9 of Figure 8.

This improved decorating machine comprises a frame 1 which may be formed of wood or metal and includes in its construction, corner posts 2 between which extend upper and lower bars 3 and 4 which are secured against the outer side faces of the legs. Intermediate bars 5 are secured to the legs against inner side faces thereof, and between these intermediate bars are secured inner bars 6 which extend longitudinally of the frame. A lower shelf 7 is supported at the front of the frame upon the lower bars 4. Smaller platforms 8 are secured upon end portions of the bars 6 and there have also been provided rear platforms 9 spaced from the ends of the frame and extending rearwardly from the rear one of the bars 6. Midway the length of the frame the bars 6 are braced by vertically disposed braces 10. There has thus been provided a frame which is of strong and durable construction. Upper platforms 11 extend across the end portions of the frame and over the platforms 8 and are formed with recesses or cutouts 12.

A turntable 13 is disposed centrally of the frame and has upper and lower discs 14 and 15 held in vertical spaced relation to each other by an annular web or wall 16. The lower disc

15 carries a depending centrally located sleeve 17 which is braced by webs 18 and rotatably fit about a post 19 extending vertically between the bars 8 of the frame. A suitable number of spindles 20 are journaled vertically through the discs 14 and 15 and at their upper ends carry heads or tables 21 upon which the bottles or other objects 22 to be decorated are placed during the use of the machine.

Pairs of depending plates 15' which extend radially of the turntable are carried by disc 14 between the spindles. The lower ends of the spindles protrude from the disc 15 and carry pulleys 23 by means of which rotary motion is to be transmitted to the spindles or object carriers as they move into position for spraying paint upon the bottles during intermittent rotation of the turntable. A latch 24 which has the form of a bell crank is pivotally carried by a bracket 25 at the back of the frame and extends in the direction of the circumference of the turntable and is yieldably in position for its roller 26 to enter recesses or seats 27 in the periphery of the lower disc 15 by a spring 28 having one end secured to the arm 29 of the latch and its other end anchored to a block 30 mounted against a side face of one of the legs 2.

When the latch is moved in a direction to shift the roller out of a recess, the turntable may be turned about its axis until the next recess moves into position to receive the roller, at which time rotation of the turntable will be halted. It will thus be seen that intermittent rotary motion may be imparted to the turntable and the turntable rotated in step by step movements, each of which is sufficient to bring one of the bottles carried by the rotary article carriers or spindles into position to have paint sprayed thereon.

In order to impart rotary motion to the spindles there have been provided belts 31 engaged about pulleys 32 and 33, the pulleys 32 being carried by posts 34 rising from the platforms 9 and the pulleys 33 being fixed to vertically disposed shafts 35 and 36. The shaft 35 is rotatably mounted in a bearing 37 carried by platform 7 and shaft 36 is coupled to the shaft 38 constituting an element of a reduction gearing mounted in the housing or casing 39. This casing 39 is mounted upon platform 7 and the reduction gearing includes a shaft 40 carrying a pulley 41 about which is trained a belt 42, constituting means for transmitting rotary motion to the shaft 42 from the pulley 43 carried by the shaft of an electric motor or power unit 44.

Inner flights of the belts 31 are adapted to bear against the pulleys 23 of spindles located at the decorating stations to impart rotary motion to these spindles and when the latch is moved to a releasing position, rotary motion will be imparted to the turntable as will be hereinafter set forth until the roller of the latch enters another recess 27 and halts turning of the turntable. A sprocket chain 45 which is trained about the sprocket wheels 46 and 47 carried by shafts 35 and 36 serves to transmit rotary motion from shaft 36 to shaft 35. Therefore, the two shafts turn at the same rate of speed and the two belts 31 move at the same rate of speed. If so desired, a belt and pulley may be used instead of the sprocket chain 45 and the sprocket wheels engaged thereby.

Countershafts 48 and 49 having bases, constituting bearings for these shafts are supported upon the platforms 8 and in order to maintain the countershafts upright, there have been provided bearing brackets 50 and 51. Sprocket chains 52, which are trained about sprocket wheels 53 and 54 carried by shafts 35 and 36 and shafts 48 and 49, serve to transmit rotary motion to the countershafts. Pulleys 55 which are rotatably supported by the spindles 56 engage outer flights of the chains 52 and serve as tighteners for the chains. Discs 57 are mounted at upper ends of the countershafts and each is upwardly thickened at one point about its circumference, as shown at 58, and, therefore, the discs 57 constitute cams serving a purpose to be hereinafter set forth.

The countershaft 49 carries an arm 59, which extends radially therefrom and at its outer free end, the arm carries an upstanding roller 60, and a finger 61, which is formed from a metal strip secured against a side face of the arm and has its outer end portion bent laterally from the arm. The length of the arm is such that during rotation of the shaft 49, the side finger will engage the free end of the arm or handle 29, of latch 24, and the roller 60 will engage the pairs of depending plates 15' which extend radially of the turntable and carried by disc 15 between the spindles. The roller 60 slidably engages the sides of the plates 15' and by a sliding motion moves or rotates the turntable until the roller 26 drops into the recesses or seats 27, in the periphery of the lower disc 15 once during each rotation of the shaft 49. And the intermittent movement occurs and the latch moves to a releasing position which permits the rotation of the turntable and the roller 26 then moves into contact with the marginal edge of the disc 15 and enters in the next recess or seat 27 to intermittently halt rotation of the turntable. It will thus be seen that rotation is intermittently imparted to the turntable by the slidable movement of the roller 60, on the arm 59 into the space between each pair of plates 15', the extent to which the turntable is turned when released being such that during each turning movement a pair of spindles will be moved into position opposite the countershafts and the heads 57 thereof.

The bottles or other objects carried by the tables 21 are to be coated when located opposite the countershafts, or in other words, at the coating stations in position to be coated by paint sprayed toward and onto the bottles from the spray guns 62. The spray guns are of a conventional construction and each is supplied with paint from a tank 63 through a tube 64 and air under pressure is delivered to the gun from a suitable source through a tube 65. Each gun is secured to the sleeve 66' of a rocker bar 66 by a clamp 67 and extends longitudinally of the rocker bar in the direction of the inner end thereof so that when the trigger 68 of the gun is pressed upon by the actuating lever 69, paint will be sprayed from the gun and onto a bottle or other object at the coating station.

Each paint tank 63 is held by a clamp 70 secured about the upper end of a tubular post 71 which is mounted in an upright position upon a base 72 and in order to hold the post in its upright position there has been provided a bracing strip 73 carried by a standard 74 rising from one of the brackets 75 carried by the base 72. The brackets extend longitudinally of the base and are formed with aligned openings 76 through a selected pair of which is passed a bolt 77 constituting a pivot pin for a lever 78. At its inner end, the lever carries depending plates 79 between which a roller 80 is rotatably mounted and

since the roller rests upon the cam 57, rocking motion will be imparted to the lever during rotation of the cam. The outer end of the lever is pivoted to the lower end of a link 81 which has its upper end pivoted to the outer end of the rocker bar 66, and since the rocker bar is pivotally mounted by a bolt or pin 82 to the meeting ends of fulcrum strips 83 and 84 which are pivotally mounted by bolts 85 and 86, tilting movement of the lever will cause the rocker bar 66 to be swung vertically and the sleeve 66' carrying the spray gun shifted vertically along the post 71 from the lowered position shown at the right of Figure 1 to the raised position shown at the right of this figure and then back to its lowered position. The sleeve 66' is pivoted to a sleeve 71' slidably carried by post 71.

During the upward movement of the rocker bar and the spray gun, the trigger of the gun must be pressed upon to cause paint to be sprayed from the gun. In order to do so, there has been provided a roller 87 carried by a bracket 88 which is clamped about the post 71 in such position thereon that when the rocker bar and the spray gun carried thereby are swung upwardly, the trigger operating lever 69 which rests upon the roller 87 will be pressed upon and tilted about its pivot to actuate the trigger and cause paint to be discharged from the nozzle of the gun.

During operation of the coating machine, the motor is started and motion imparted to the belts 31 and the shafts 48 and 49. Bottles or other objects are set in place upon the tables 21 carried by spindles 20 and during rotation of shaft 49, the latch 24 will be moved to a releasing position so that the turntable 13 may be turned until the latch again engages in a recess of disc 15 and halts movement of the turntable. It will thus be seen that the turntable will be intermittently turned and the bottles will be successively moved into position opposite the spray guns at the coating stations.

In view of the fact that the belts 31 bear against the spindles 20 which are opposite the spraying stations, the bottles resting upon the tables 21 of these spindles will be rotated, while at the coating stations, and the bottle will be coated throughout its circumference. The timing is such that during operation of the machine the cams 57 of the shafts 48 and 49 will cause the spray guns to be shifted upwardly to a raised position and their triggers moved in a direction to effect discharge of paint from the guns as spindles carrying the bottles arrive at the spraying stations and are turned so that the bottles will be coated throughout their circumferences. The spray guns are then shifted downwardly to shut off their valves and the latch is moved to a releasing position allowing the turntable to be turned.

By providing two spraying stations, the bottles may be given two coats of paint before they are removed or if so desired, two operators may stand at opposite sides of the machine and each arrange bottles in place upon the tables 21 and remove them after they have been painted.

The spraying stations are at diametrically opposite sides of the turntable and in order to prevent a bottle at one side of the turntable from being sprayed with paint discharged from the spray gun at the opposite side of the machine and to also catch paint sprayed from a gun if a bottle is not resting upon a spindle at the spraying station, there has been provided a housing or hood 89 mounted over the center of the turntable and open at its opposite sides. This hood or housing has sloping bottom walls 90 which serve as baffles and at its top the housing communicates with a conduit or duct 91 through which a draft is created by a suitably located source of suction so that air and paint will be drawn into the housing and through the duct to a point where it may be recovered for further use or disposed of in any desired manner.

In Figures 7, 8 and 9 there has been illustrated means for permitting a portion of a bottle to be coated without the paint being sprayed upon the remainder of the bottle. This may be provided at each coating station if two coats of paint are to be applied to the top of a bottle or only at one station, if it is desired to have the entire bottle first coated and then a second coat of a contrasting color applied to only a portion of the bottle.

It will be assumed that the bottle is to be entirely coated at the right hand station of Figure 1 and the upper portion of the bottle coated at the left hand station. In order that the second coat may be restricted to the upper portion of the bottle, there has been provided a shield 92 which conforms to the transverse curvature of the bottle and is of such height that it extends from the bottom of the bottle to a point spaced from the upper end thereof. This shield or mask is formed of metal or of any other suitable material and has its lower end secured to a bracket 93 carried by a mounting strip 94 formed of angle metal. The mounting strip 94 is mounted at ends of rods 95 which slide through bearing brackets 96 and a spring 97 yieldably holds the mounting formed by the strip and its rods in a retracted position. The bearing brackets are mounted under the base 72 and the spring is secured at its ends to the base and the mounting strip.

The cam 57' which is applied to the shaft 48 instead of the cam 57 previously used is formed with an auxiliary cam 98 extending radially therefrom for engaging the vertical flange of strip 94 during rotation of shaft 48. The relation of flange 98 to the upwardly thickened portion of cam 57' is such that the mounting and the shield carried thereby will be shifted toward the turntable and the shield disposed in covering relation to a bottle at the spraying station as the spray gun is shifted upwardly and its valve opened to cause paint to be discharged from the nozzle of the gun. The portion of the bottle above the shield will be coated for the entire circumference thereof and after this second coat has been applied, the cam 98 will move in a direction away from the cross strip and the spring 97 will draw the mounting to its retracted position. It will thus be seen that a bottle having a multi-color decoration may be produced, and it will be obvious that if so desired, the shield may cover the bottle for its entire height and may be formed with openings such as are formed in a stencil so that scattered decorations or the like may be applied to a bottle after the first coat of paint is applied.

It will thus be seen from the foregoing description that I have provided a decorating machine that will at all times be positive and efficient in its operation in carrying out the purposes for which it has been designed.

Squeegee-screen and type or roller printing in ceramic colors are usually carried out to transpose a predetermined configuration upon the ar-

ticles to be decorated, and are not practicable for full surface decorating.

This invention provides a machine to enable full surface decorating to be carried out upon substantially cylindrical articles, such as bottles or cans, such decorating being either partially or wholly over the exterior surface of such bottles or cans. The improved machine gives the article a prime or basic coating or design, and then before the article leaves the machine, gives it, if desired, another coating or superposed design either of the same or a different color. Any design in one or more colors while the article is in the machine may be supplied.

As the spraying of a solid color is the most economical method of producing solid colors upon an article, this commercial factor is utilized and the machine operates economically to carry out its principle of operation, so as to be automatic and speedy in action, without the hand of man touching the articles while being operated upon by the machine.

The invention as embodied in the machine, enables cans, bottles, jars or the like to be given a full surface coating on the neck portion only, with imitation gold, silver or the like, now especially favored in beverage uses in imitation of foil, or a banding can be carried out, on the neck or body of the article. The invention enables specific designs to be applied to the articles. The invention enables several colors to be applied, registration of the same being taken care of by arresting the article immediately on its moving to its correct spraying position. Furthermore, the invention embodied in the machine provides for an evenness of application of color, by the relative rotation of the article and the control exerted upon the color application means.

The intermittently movable article conveyor brings the article to a color application position, where it is arrested in its movement, and the article simultaneously rotated, and impinged by color, either by direct application, or through the intermediary of a mask. This having been accomplished, the movement of the article, intermittently arrested in its movement during its rotation, is continued. For double coating, or multi-coloring, the same article is subjected to one or more similar operations.

For convenience of operation, the invention as embodied in the embodiments shown and described, consists of a rotary table provided with spaced, article-holding spindles, having at one or more points of its periphery, a spray gun station or stations provided with spray guns to project the color and impinge the color upon the article in any of the forms described. As each article supported on each of the spaced article holding spindles arrives during the rotation of the table at one of the spray gun stations, the table is locked by a latch against further rotary movement, and the spindle with the article is rotated, simultaneously with the actuation of the spray gun. This decorating action having been completed, the table is unlocked, the rotary force applied to the spindle is discontinued, the spray gun action is shut off and the article moved to its place of exit, or to any other spray gun station, where the same actions repeat themselves.

The invention differs from the prior art in this, in that intermittent feeding of articles in connection with squeegee-screen and type or roller ceramic printing has been known, but such a feeding action has not been combined with a spray action; and while no novelty is claimed for a spray gun, this being long known, the setting of such a spray gun into activity during simultaneous rotation of the article while in axially stationary position, and the discontinuance of its activity upon the continued spatial movement of the article differs from anything heretofore proposed. The art has not heretofore been acquainted with an automatic machine to carry out the foregoing objects, nor with the particular means devised to carry it out.

While I have shown the preferred embodiment of my invention, it is to be understood that various changes in the size, shape and arrangement of parts may be resorted to without departing from the spirit of the above and the scope of the appended claims.

What I claim is:

1. In a spraying machine, a frame, a turntable carried thereby, a latch for releasably holding said turntable stationary, vertical spindles rotatably carried by said turntable and spaced from each other circumferentially thereof, object-holders at upper ends of said spindles, rollers carried by said spindles, a carrier mounted opposite one side of said turntable and shiftable vertically, a spray gun carried and directed towards the turntable by said carrier, means for turning on the spray gun when the carrier is moved vertically to shift the gun into position for use, a drive shaft, a driven shaft rotated from the drive shaft, a cam at the upper end of said driven shaft for actuating said carrier and moving the spray gun into and out of position for use, an arm carried by said driven shaft and extending radially therefrom for intermittently engaging said latch during rotation of the driven shaft and moving the latch to a releasing position allowing rotation of the turntable, and means driven from said drive shaft for rotating the turntable when the latch is in a releasing position and then rotating a spindle opposite the spray gun while the turntable is held stationary by the latch.

2. In a decorating machine, a frame, a turntable carried by said frame, spindles rotatably carried by said turntable and having article carrying heads above the turntable, rollers carried by said spindles, a latch for releasably holding said turntable stationary, means for rotating the turntable when the latch is in a releasing position, means for rotating the spindles while the turntable is held stationary including a driving shaft, a decorating station, a mounting carried by the frame at the decorating station, said mounting comprising a base, a standard rising from said base, a sleeve slidable vertically along said standard, a second sleeve pivoted to the first sleeve, an arm pivotally mounted and at one end pivoted to the second sleeve, a lever pivotally mounted and slidably received through the second sleeve, a spray gun carried by the second sleeve and having a trigger, an actuating bar for said trigger extending upwardly from the spray gun, a member carried by said standard and engaging said bar to move the bar and actuate the trigger when the air gun is shifted upwardly, a driven shaft rotatably mounted, a cam carried by the driven shaft and engaging said lever to actuate the same during rotation of the driven shaft, and means for transmitting rotary motion to the driven shaft from said driving shaft.

3. In a decorating machine, a frame, a turntable carried by said frame, spindles rotatably carried by said turntable and having article carrying heads above the turntable, rollers carried by said spindles, a latch for releasably holding

said turntables stationary, means for rotating the turntable when the latch is in a releasing position, means for rotating the spindles while the turntable is held stationary including a driving shaft, a decorating station, a mounting carried by the frame at the decorating station, said mounting comprising a base, a standard rising from said base, a brace for said standard, a lever pivotally mounted and extending longitudinally of said base, a sleeve slidable vertically upon said standard, a second sleeve pivoted to the first sleeve, an arm slidable through the second sleeve, links pivoted to the base and the brace and having their other ends overlapped and pivoted to said arm, a pitman extending between and pivoted to the arm and the lever, a spray gun carried by the second sleeve, a bar for actuating the trigger of said gun pivoted to the gun and extending upwardly therefrom a roller carried by said standard and engaging said bar to move the same and actuate the trigger when the arm is moved to shift the spray gun upwardly, a driven shaft rotatably mounted in said frame, a cam carried by said driven shaft and engaging said lever to actuate the lever during rotation of the driven shaft, and means for transmitting rotary motion from the driving shaft to the driven shaft.

4. In a decorating machine, a frame, a turntable carried thereby, a decorating station, object holders rotatably carried by said turntable and spaced from each other circumferentially thereof, a latch for releasably holding the turntable stationary, means for intermittently moving the latch to a releasing position, means for rotating the turntable a distance to move an object holder into position at the decorating station, said means engaging said object holders to rotate the same while at the decorating station, a mounting at the decorating station, a spray gun carried by said mounting, means for actuating said mounting means to move the spray gun into position to discharge coating material toward an object carried by a rotating object holder at the decorating station, a shield mounted for movement into and out of position for covering a portion of an object carried by an object holder at the decorating station, and means for shifting the shield toward an operative position in timed relation to movements of the turntable and the mounting.

5. In a decorating machine, a frame, a turntable carried thereby, a decorating station, object holders rotatably carried by said turntable and spaced from each other circumferentially thereof, a latch for releasably holding the turntable stationary, means for intermittently moving the latch to a releasing position, means for rotating the turntable a distance to move an object holder into position at the decorating station, said means engaging said object holders to rotate the same while at the decorating station, a mounting at the decorating station, a spray gun carried by said mounting, means for actuating said mounting means to move the spray gun into position to discharge coating material toward an object carried by a rotating object holder at the decorating station, said means including a rotary shaft and a cam carried thereby, a shield for covering a portion of an object carried by an object-holder at the decorating station, a cross bar carrying said shield, rods extending from said cross bar and slidably mounted, and spring means holding the cross bar in engagement with same cam to cause the cross bar and the shield to have movement into and out of position for use during rotation of the shaft and the cam.

6. In a decorating machine, a frame, a coating station, a turntable carried by said frame and having upper and lower disks, one disk being formed with seats spaced from each other about its periphery, a latch for engaging in said seats and releasably holding said turntable stationary, spindles rotatably mounted through the disks of said turntable in spaced relation to each other circumferentially thereof and having object-holders at their upper ends, rollers carried by lower ends of said spindles, a spray gun mounted at the coating station in space relation to one side of said turntable, a vertical drive shaft in front of the turntable, a pulley carried thereby, an idler pulley carried by the frame back of the turntable, a belt trained about said pulleys with one flight presented toward the turntable to engage the rollers of the spindle opposite the spray gun and rotate the said spindle, means for actuating the spray gun in timed relation to movement of the turntable including a vertically disposed driven shaft and an arm carried thereby for moving the latch to a releasing position after coating material has been sprayed upon an object carried by the spindle opposite the spray gun, and means carried by said arm for intermittently engaging the turntable and turning the turntable in step by step movements when the latch is in its releasing position.

7. In a decorating machine, a frame, a turntable carried thereby, article holders rotatably carried by said turntable, a latch carried by said frame for releasably holding the turntable stationary, a drive shaft rotatably mounted in said frame, a pulley carried by said drive shaft, an idler pulley rotatably carried by said frame, a belt trained about said pulleys with one flight presented toward said turntable for engaging the article holders, the belt constituting means for rotating an article holder while the turntable is stationary, a mounting carried by said frame at a coating station spaced from one side of the turntable, a spray gun carried by said mounting, a lever for imparting vertical movement to said mounting and thereby shifting the spray gun upwardly from a lowered position into position for discharging coating material against an article carried by an article holder at the decorating station, a driven shaft rotatably mounted in said frame, means for transmitting rotary motion from the drive shaft to said driven shaft, a cam carried by said driven shaft and engaging said lever for imparting movement to the lever during rotation of the driven shaft, means for actuating the trigger of the spray gun as the spray gun is shifted upwardly, an arm extending laterally from said driven shaft, means carried by said arm for engaging the latch and moving the latch during rotation of the driven shaft to a releasing position in timed relation to movement of the mounting, and means carried by said arm for imparting rotary motion to said turntable while the latch is in a releasing position.

8. In a decorating machine, a frame, a turntable in said frame including upper and lower disks, spindles rotatably mounted vertically through said disks, article holding heads at upper ends of said spindles above the upper disk, rollers carried by said spindles under the lower disk, the lower disk having seats in its margin adjacent said spindles, a latch pivotally mounted in said frame adjacent the periphery of the turntable and yieldably held in position for engaging in a seat of the lower disk and releasably holding the turntable stationary, a drive shaft rotatably

mounted in said frame, an endless belt driven from said drive shaft and having a flight in position for engaging said rollers and individually rotating the spindles when the turntable is stationary, abutments carried by the lower disk, a decorating station, a mounting carried by said frame at the decorating station, a spray gun carried by said mounting, means for actuating said mounting to move the spray gun from a lowered position to a raised position for discharging decorating material onto an article carried by a spindle opposite the decorating station including a driven shaft rotated from the drive shaft, an arm extending laterally from said driven shaft, means carried by said arm for engaging the latch and moving the latch during rotation of the driven shaft to a releasing position in timed relation to movement of the mounting, and means carried by said arm for engaging said abutments and imparting step by step rotation to said turntable when the latch is in a releasing position.

FREDERICK SHURLEY.