Sept. 5, 1939. A. P. JACKEL 2,171,751

REMOTE CONTROL SYSTEM

Filed March 20, 1937 3 Sheets-Sheet 1

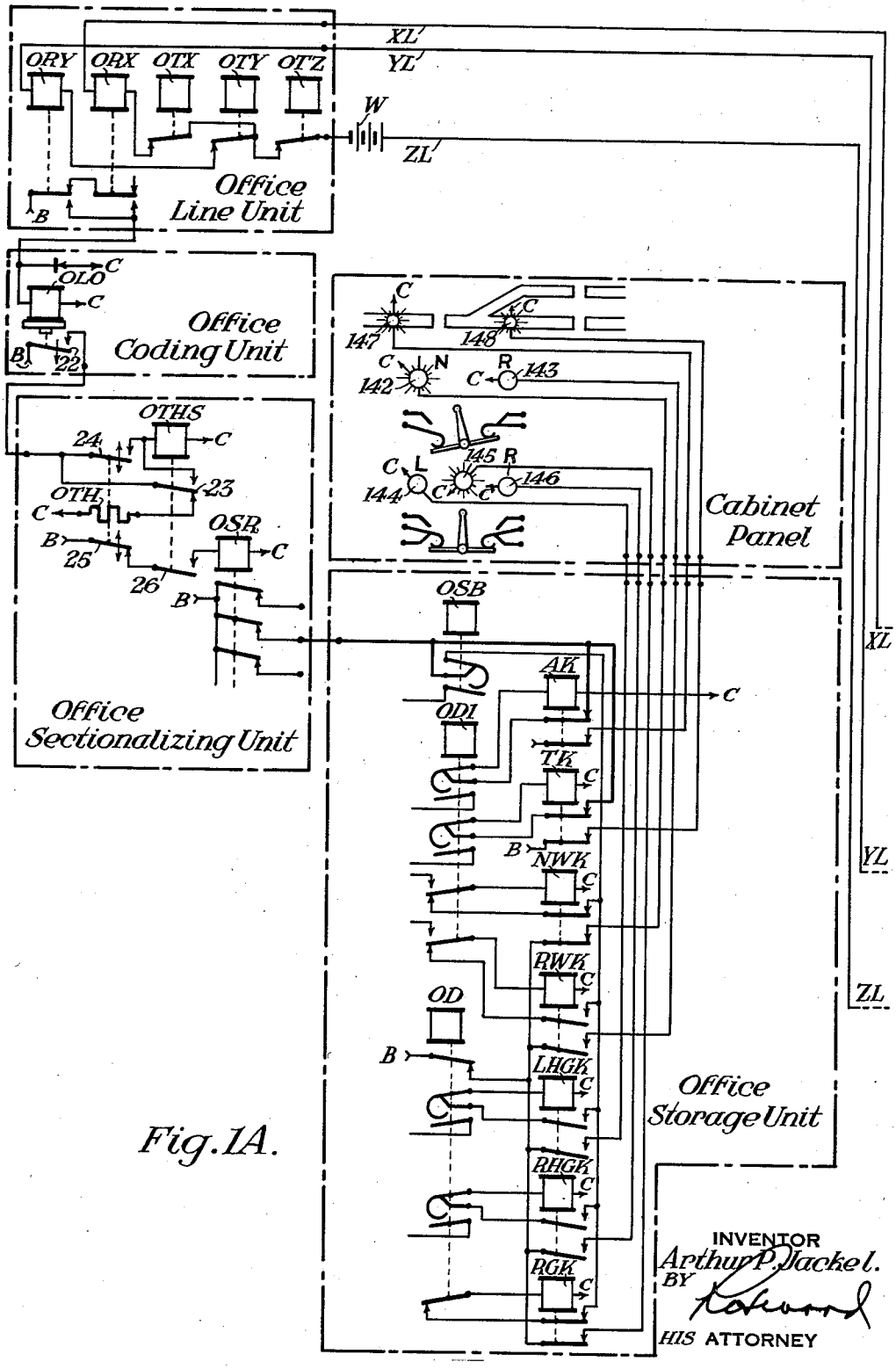

Fig. 1A.

INVENTOR
Arthur P. Jackel.
BY
HIS ATTORNEY

Sept. 5, 1939. A. P. JACKEL 2,171,751

REMOTE CONTROL SYSTEM

Filed March 20, 1937 3 Sheets-Sheet 2

Fig. 1B.

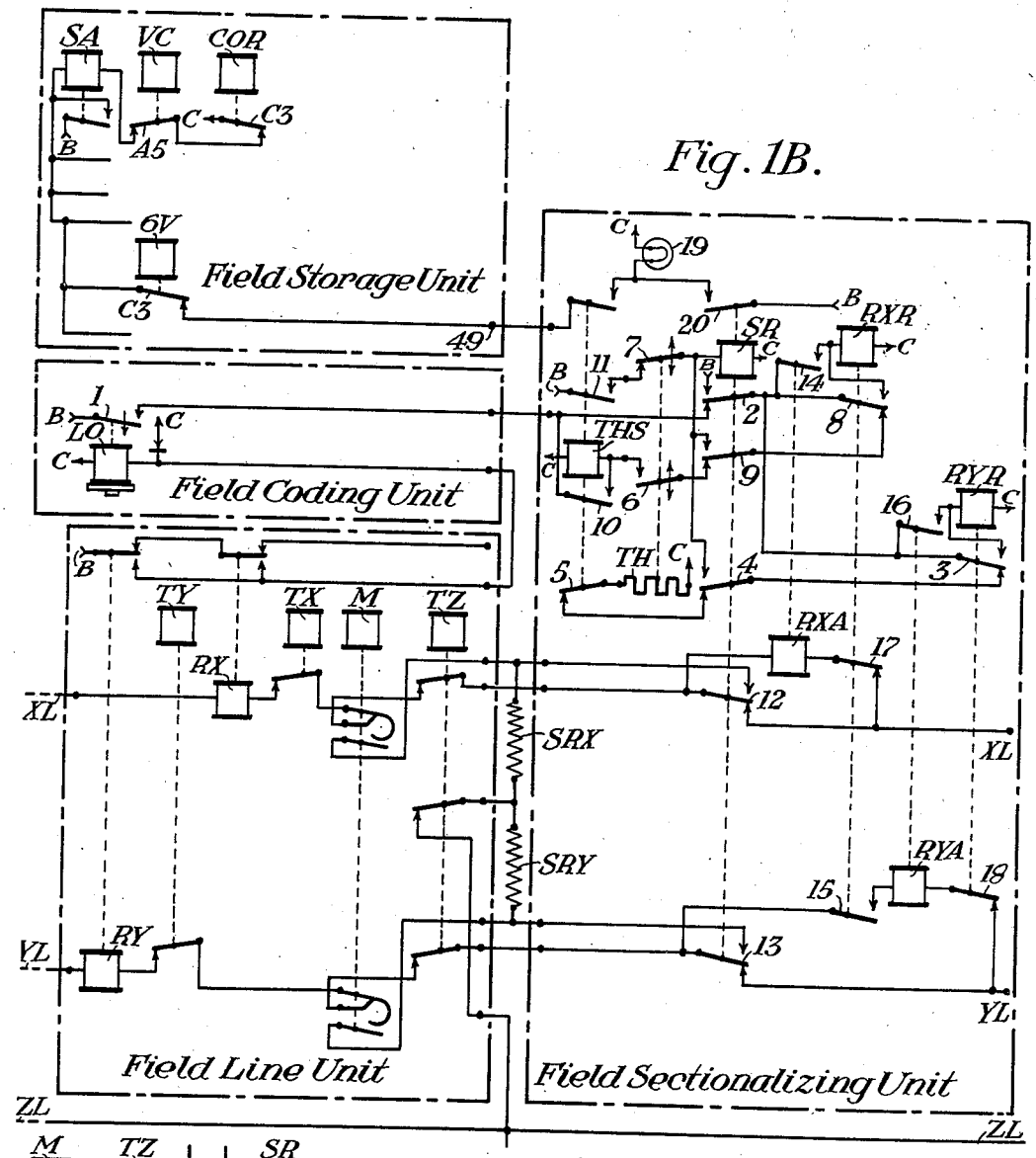

Fig. 2.

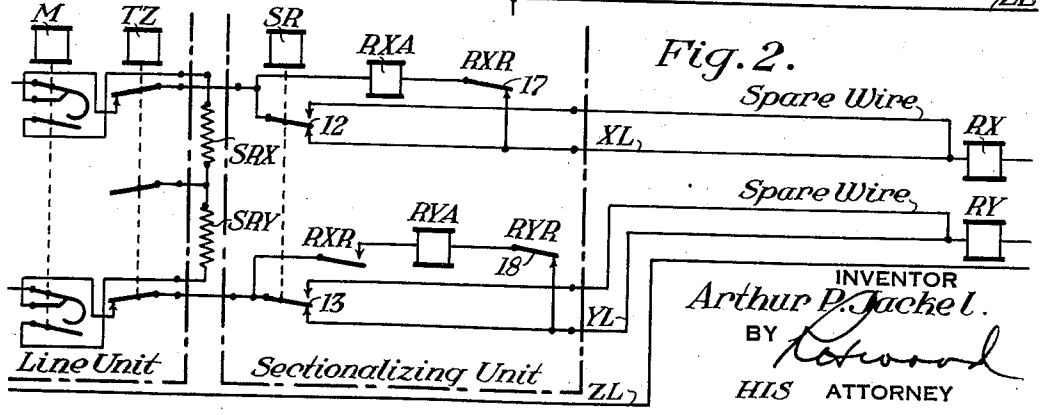

INVENTOR
Arthur P. Jackel.
BY
HIS ATTORNEY

Sept. 5, 1939. A. P. JACKEL 2,171,751

REMOTE CONTROL SYSTEM

Filed March 20, 1937 3 Sheets-Sheet 3

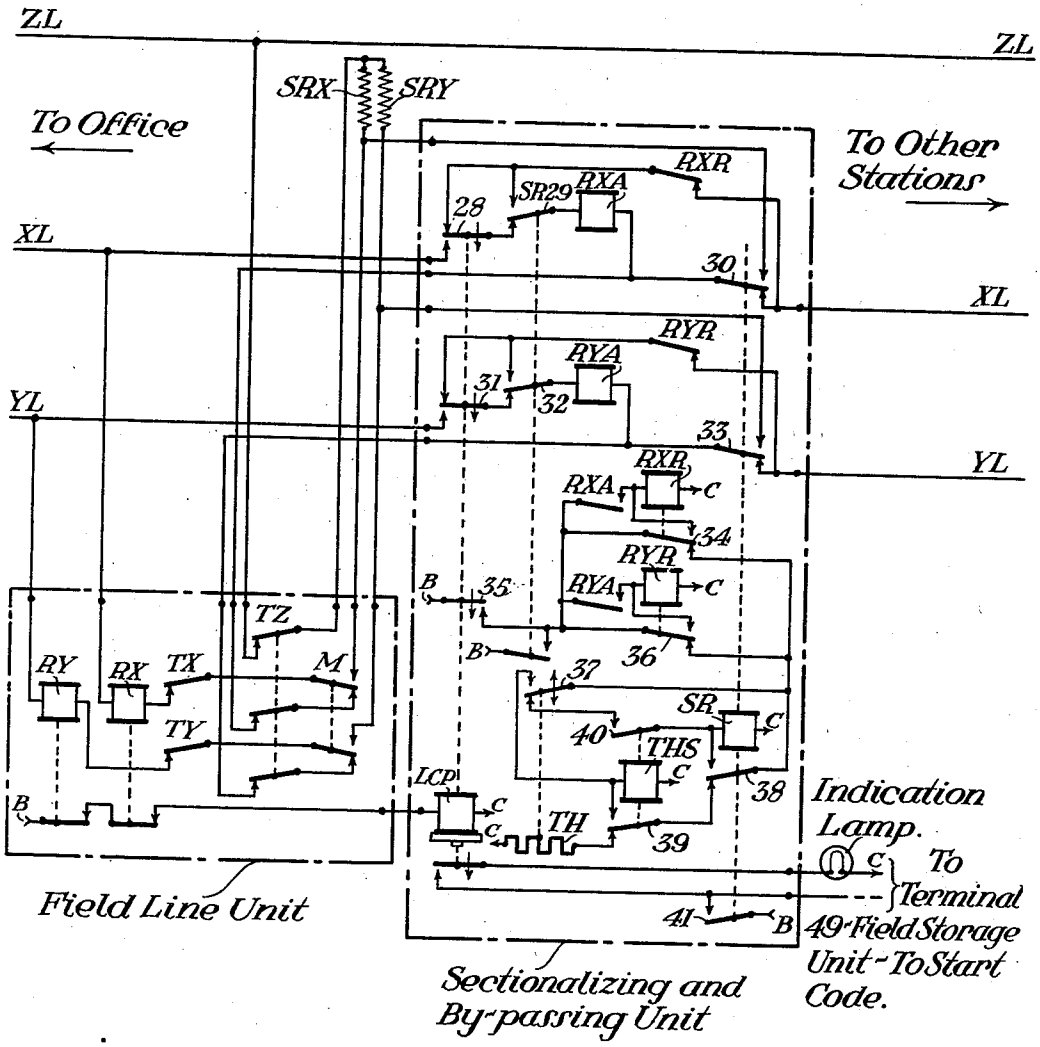

Fig. 3.

INVENTOR
Arthur P. Jackel.
BY
HIS ATTORNEY

Patented Sept. 5, 1939 2,171,751

UNITED STATES PATENT OFFICE

2,171,751

REMOTE CONTROL SYSTEM

Arthur P. Jackel, Penn Township, Allegheny County, Pa., assignor to The Union Switch & Signal Company, Swissvale, Pa., a corporation of Pennsylvania

Application March 20, 1937, Serial No. 132,118

14 Claims. (Cl. 177—353)

My invention relates to remote control systems and particularly to systems of the type in which communication is established by means of codes or other signals transmitted over line wires extending between spaced points. Apparatus embodying my invention are particularly suitable for, though in no way limited to, use in connection with centralized traffic control systems for railroads, in which traffic governing devices located at a plurality of points distributed along a railroad right-of-way may be controlled from an office in which indications are received from the field stations concerning traffic conditions at those stations.

In systems of this character, the reliability of operation is dependent upon the continuity of the line wires over which signals are transmitted in both directions between the office and the several stations. For reasons of economy, it is desirable to control a large number of stations over a minimum number of line wires, and it is therefore customary to extend the line wires from the office serially through the stations. With such an arrangement a single break in a line wire could incapacitate the entire system, and in order to prevent this occurrence I propose to provide sectionalizing equipment distributed throughout the system, preferably at every station, and arranged to connect auxiliary paths with the line circuit for the purpose of completing the circuits around a break or fault, so that the remainder of the system may be utilized.

In order to practice my invention, I provide station apparatus which responds to a break in the line circuit to control the line by either connecting a shunt path across the line circuit or by-passing the station or substituting a spare wire for the usual line conductor, and thereby restore to use so much of the line circuit as lies between the sectionalizing equipment and the office.

In at least one form of remote control system currently employed for centralized traffic control, two line circuits extend from the office through the several stations. In applying my invention to a system of this character, the sectionalizing equipment may be arranged to respond to a break in any line circuit to place shunt paths across all of the line circuits. The sectionalizing equipment is automatically restored if the line circuits are intact at least as far as the next station in advance.

Another object accomplished by my invention is the provision of automatic indication at the office of the condition of the sectionalizing equipment, and I accomplish this result by extinguishing the usual panel indication lights in the office in response to a break in the line, and causing the sectionalizing equipment to transmit an indication code to the office to reestablish the normal indication lights at stations where the sectionalizing has restored the line circuit to the office.

Another feature of my invention is the provision of by-passes at the field stations which become effective to complete the line circuits around the stations in the event of a line break within the limits of the station apparatus, and to then remove the by-passes from all stations except the one in which the broken circuit occurs.

Another feature of my invention is the automatic transfer of the line circuit to spare conductors where available in the event of a break in any of the normal circuits.

I shall describe several forms of apparatus embodying my invention, and shall then point out the novel features thereof in claims.

In the accompanying drawings, Figs. 1A and 1B are diagrammatic views which, when placed end to end with Fig. 1A at the left, illustrate a system of remote control embodying my invention. Figs. 2 and 3 are diagrammatic views illustrating modified forms of field station equipment for the system illustrated in Figs. 1A and 1B and also embodying my invention.

Similar reference characters refer to similar parts in both views.

Referring first to Figs. 1A and 1B, I have illustrated a system of remote control in which an office (Fig. 1A) is connected with a plurality of stations, one of which is illustrated in Fig. 1B, by means of three line wires XL, YL and ZL. These three wires provide two line circuits which are normally energized from the office by battery W, and which extend serially through the stations. At the office is an office line unit including two line relays ORY and ORX one in each line circuit, and the line circuits also include back contacts of transmitter relays OTX, OTY and OTZ, which are actuated by apparatus forming no part of the present disclosure, to transmit control codes over the line circuits to the field stations.

Each field station is provided with a field line unit including a line relay RX in wire XL and a line relay RY in wire YL. These field line relays are responsive to codes delivered to the line circuits from the office transmitter and operate receiving equipment of any suitable type.

Each field line unit also includes a master relay M, which is deenergized, as shown, under normal conditions, but which is energized when that field

station starts to transmit an indication to the office. The indication codes originating at the stations are created by transmitter relays TY, TX and TZ, having back contacts included in the line circuits, and it will be noted that when the master relay M at a station is energized, both line circuits to stations more remote are opened and the line circuit is completed to the office through sectionalizing impedances SRX and SRY, which are usually designed to have approximately the same impedance as the portion of the line which they replace.

The indication codes transmitted to the office operate receiving apparatus through the medium of the office line relays ORX and ORY, and the receiving apparatus in turn controls indication relays which govern lamps located on the front panel of the cabinet of the control machine. The panel lamps are controlled by stick indication relays which are illustrated in Fig. 1A in the office storage unit.

For the purposes of the present invention it is sufficient to say that when an indication code is received, the indication stick relays corresponding to the station where that code originated, are selectively controlled in accordance with the characteristics of that code, and the indication relays in turn control the lighting circuits for the panel lamps. It should be pointed out that the indication relays remain energized by virtue of their stick circuits after the termination of the received code.

The apparatus thus far described is disclosed and claimed in a copending application for Letters Patent of the United States, Serial No. 538,380, filed May 18, 1931, by C. S. Snavely, A. B. Miller and R. H. Tunell, for Remote control systems, and in the corresponding British Patent No. 399,539 accepted complete October 4, 1933, and in the accompanying drawings I have followed, in so far as possible, the nomenclature of said Snavely et al. application. Relays OSB, OD1 and OD contained in the office storage unit of Fig. 1A are operated during the transmission and reception of codes by circuits shown in Figs. 6 and 8 of said Snavely et al. application.

With the system thus far described, since the transmission of codes in either direction between the office and the stations requires the continuity of both line circuits, it is apparent that the entire system may be incapacitated by a break in any one of the three line wires. In order to prevent this occurrence, I provide a field sectionalizing unit, as shown in Fig. 1B, preferably at each field station. The sectionalizing unit comprises a sectionalizing relay SR, which when energized, opens the line circuits XL and YL to stations more remote, and connects the sectionalizing impedances SRX and SRY across the two line circuits at the corresponding station. The sectionalizing relay SR is controlled by a stick relay THS, which is in turn controlled by a thermal relay TH governed by a slow acting relay LO, which is a part of the standard system shown in the Snavely et al. application referred to above. Thus if either line circuit breaks, one of the line relays RX or RY at each field station will be released, thereby energizing relay LO and closing its front contact 1. When this occurs, a circuit is completed from terminal B over front contact 1 of relay LO, back contact 2 of relay SR, back contact 3 of relay RYR, back contact 4 of relay SR and back contact 5 of relay THS through the heating element of a thermal relay TH to terminal C. Relay TH is designed to provide a time element substantially greater than the longest period of open line circuit normally occurring during any code transmission, and may be of the order of three minutes, that is, the relay requires three minutes after energization to heat up sufficiently to close its front contact 6 and thereafter to cool sufficiently to restore its contact 7.

When the circuit traced above is closed, the relay TH commences to heat, and after the termination of a delay period, contact 6 closes. A circuit is then completed for picking up relay THS, current flowing from terminal B, over front contact 1 of relay LO, back contact 2 of relay SR, back contact 8 of relay RXR, back contact 9 of relay SR, front contact 6 of relay TH and the winding of relay THS to terminal C. Relay THS now picks up and is thereafter retained in its energized condition by its stick circuit including its own front contact 10 and front contact 1 of relay LO. The energization of relay THS closes its front contact 11 and at its back contact 5 opens the heating circuit for relay TH. When the thermal relay TH has cooled sufficiently to close its contact 7, if the line is still open so relay LO is still energized to hold relay THS stuck up, current is supplied to relay SR over front contact 11 of THS and contact 7 of thermal relay TH. Relay SR then picks up to sectionalize both of the line circuits by closing its front contacts 12 and 13.

If both line circuits are intact from this point to the office, the line relays RX and RY will both be energized and relay LO will release. This will deenergize relay THS, but relay SR will remain energized by virtue of two stick circuits which will be described more in detail hereinafter.

Assuming that each of a plurality of field stations is equipped with sectionalizing equipment, as thus far described, a break in any line circuit will cause all of the line relays in that circuit to release and will start the operation of the thermal relay associated with each field sectionalizing unit. When the first sectionalizing relay on the office side of the break picks up, the operation of its contacts 12 and 13 will complete both line circuits from the office to the point of sectionalizing, and all intervening line relays will then pick up to release the associated relays THS, thereby preventing further operation at all sectionalizing units between the first to operate on the office side of the break and the office itself.

It is also desirable, however, to trip out an operated sectionalizing unit if a more remote station can heal the line circuit in order that the system may be operative up to the last station on the office side of the break. In order to accomplish this result, I have provided in each field sectionalizing unit an arrangement of equipment which automatically releases the sectionalizing relay in case the line circuit is intact at least as far as the next sectionalizing unit. In order to accomplish this result, I have provided an auxiliary line relay RXA for the line circuit which includes line relay RX, and an auxiliary line relay RYA for the other line circuit. When relay SR becomes energized to sectionalize the line, relay RXA connected in parallel with back contact 12 of relay SR is interposed in line wire XL, and if the line circuit is intact to the right, the effect of this connection is to place relay RXA (in series with other relays in this line) in parallel with the sectionalizing resistance SRX. The parts

are so proportioned that the potential drop across SRX when this occurs is sufficient to energize relay RXA and close its front contact 14. Current then flows from terminal B over front contact 2 of relay SR and front contact 14 of relay RXA through the winding of relay RXR to terminal C. Relay RXR therefore picks up and is stuck up over its own front contact 8 and front contact 2 of relay SR. The energization of relay RXR also closes its front contact 15, and this connects the auxiliary line relay RYA across back contact 13 of relay SR and interposes the relay in the line circuit YL. The operation of relay RYA is analogous to that described above in connection with RXA, and if the line circuit through YL and ZL is intact at least to the next station more remote from the office, the relay RYA picks up and closes its front contact 16, whereupon relay RYR is energized over a pick-up circuit including front contact 2 of relay SR and front contact 16 of relay RYA. Relay RYR is subsequently stuck up over its own front contact 3 and front contact 2 of relay SR.

It will be noted that when relay RXR picks up, it opens its back contact 17 to remove relay RXA from line wire XL, and when relay RYR picks up, it opens its back contact 18 to remove relay RYA from line wire YL. It follows that when relay SR picks up and inserts auxiliary relays RXA and RYA in the corresponding line circuits, if one line circuit is unbroken, the auxiliary relay in that circuit immediately picks up and energizes the associated stick relay RXR or RYR to remove the auxiliary line relay from the unbroken line. With this arrangement there can be no paths in multiple with the sectionalizing impedances to interfere with proper operation of the code system.

Furthermore, the simultaneous energization of relays RXR and RYR, which can only occur if both line circuits are intact at least to the next most remote station, deenergizes the relay SR. This follows because one stick circuit for relay SR includes back contact 8 of relay RXR and the other stick circuit for relay SR includes back contact 3 of relay RYR.

When a break occurs in either line circuit, therefore, any sectionalizing relay which succeeds in sectionalizing the line, immediately tests the line circuit through line wire XL to more remote stations by interposing the auxiliary line relay RXA in that circuit. If that circuit is intact, the auxiliary line relay RYA is next interposed in the line circuit through line wire YL to the next station. If that circuit is also intact, the associated sectionalizing relay SR is released and both normal line circuits are extended as far as the next sectionalizing point, and this operation continues, the release of the sectionalizing relays occurring automatically as far as the last sectionalizing unit on the office side of the break. At this point the auxiliary line relay in one line circuit or the other will fail to pick up and will therefore allow the sectionalizing relay to remain energized until both circuits are healed. It is apparent, therefore, that with the apparatus herein shown and described, the system is operative as far as the last station on the office side of a break, and that a break in either line circuit will sectionalize both line circuits at the last station on the office side of the break, and that all sectionalizing relays, including the one on the office side of the break, will be automatically released in case the line circuits are both healed.

I have found that it is desirable to inform the operator at the office concerning the condition of the sectionalizing equipment, and I therefore provide a starting circuit for the usual field transmitting equipment for transmitting a code from a field station when the line is sectionalized at that station. This is accomplished by means of the circuit illustrated at the top of Fig. 1B, in which a connection from the terminal B of the source is carried over front contact 20 of relay SR and front contact 21 of relay THS to terminal 49 of the usual field storage unit and thence over a back contact C3 of relay 6V and the winding of the starting relay SA to terminal C over contacts A5 of relays VC and C3 of relay COR. The relays illustrated in the field storage unit are shown in detail and described in connection with Fig. 13 of the Snavely et al. application identified above. For present purposes it is sufficient to state that when relay SA becomes energized, the corresponding station transmitter delivers a code to the line circuit which selectively actuates the indication stick relays for the associated panel in the office. Thus an indication code may position relay AK in accordance with the condition of occupancy of an approach section, and relay TK may be positioned in accordance with the condition of occupancy of a detector track section. Relays NWK and RWK may be controlled in accordance with switch position, and relays LHGK, RHGK and RGK may be controlled in accordance with the aspects displayed by signals at the field location.

With this arrangement, therefore, an indication code is sent from the station to the office each time the sectionalizing relay SR at that station is energized to sectionalize the line circuit at that station.

Front contact 20 of relay SR also controls an indication lamp 19 which is lighted when the sectionalizing relay SR is energized to sectionalize the line circuits at the corresponding station.

I also provide at the office a sectionalizing unit as shown in Fig. 1A, comprising a thermal relay OTH, which is energized over front contact 22 of relay OLO in the office, which in turn is energized when either of the line relays ORY or ORX is released, as would be the case in the event of a break in any of the line wires. When OLO picks up, current is supplied to the thermal relay OTH over front contact 22 of OLO and back contact 23 of relay OTHS. Thermal relay OTH is designed to provide a time interval materially less than that measured by the thermal relays TH in the field sectionalizing units but still greater than the longest interval of open circuit normally occurring during code transmission. Relay OTH closes its contact 24 after a time interval, and thereby completes a pick-up circuit for relay OTHS, which is subsequently stuck up over its own front contact 23 and front contact 22 of relay OLO. The energization of relay OTHS interrupts the heating circuit for relay OTH, and at the completion of its timing period relay OTH closes back contact 25 and completes a pick-up circuit for relay OSR over contact 26 of relay OTHS. Due to the adjustment of the timing period of relay OTH and the design of the parts, relay OSR picks up before any of the field sectionalizing units have time to operate.

Relay OSR at the office is arranged to extinguish all of the panel lights on the cabinet of the control machine, and this is accomplished by carrying the stick circuits for all of the indication stick relays over back contacts of relay

OSR, as indicated in the heavy line in Fig. 1A. Thus when relay OSR becomes energized as a result of a break in either line, the effect is to break the stick circuits for all of the indication stick relays and thereby extinguish all of the panel lamps. I prefer to thus control all of the lights on the panel for the entire system, so that upon a line break all lights are extinguished. The first field station to sectionalize the line and complete the line to the office energizes the starting relay SA in the corresponding field storage unit and transmits an indication code to the office. This code again positions the indication stick relays AK, TK, etc., in accordance with the received code. Since relay OSR was de-energized by the release of OTHS when the line circuit was restored, the stick circuits are now completed for the indication stick relays and the panel lights are properly displayed for the particular station which has sectionalized. Other sectionalizing units may now operate between the first station sectionalized and the break in the line, and these stations may also transmit indication codes which will light the lamps on the corresponding panels. When the last sectionalizing relay on the office side of the break has completed its operation, the operator in the office may ascertain by mere inspection of his panel how much of the system is operative, because the station most remote from the office having its panel lights illuminated is the last station on the office side of the break. If any stations nearer the control office still have their panel lights extinguished, the operator may restore these lights by initiating a recall code in the usual way.

In actual installations spare conductors may be in existence or can be provided throughout at least a portion of the system. Where spare conductors are available the sectionalizing relay SR may be employed to transfer the line circuits automatically to spare paths in the event of a break in a normal line circuit. Thus, as shown in Fig. 2, the normal line circuit passes over back contacts 12 and 13 of relay SR, but spare wires are provided for the X and Y lines to the next station. At this next station the normal line XL is connected with its spare and in similar manner wire YL is connected with its spare. With this arrangement, if relay SR is energized by a break in either line circuit the closing of front contacts 12 and 13 transfers the line circuits to the spare conductors and opens the shunts around relays RXA and RYA. In Fig. 2, relay SR is controlled in the same way as in Fig. 1B and the operation will be obvious without detailed explanation.

Referring now to Fig. 3, I have illustrated a single field station equipped with apparatus which not only sectionalizes the line circuits in response to a break in any circuit but also by-passes a faulty station in case the break occurs within the limits of the field line unit. In the modification illustrated in Fig. 3, a slow-acting relay LCP is controlled by front contacts of the station line relays RY and RX, so that any break in either line circuit will cause relay LCP to become de-energized. The release period of relay LCP is longer than the greatest interval of open circuit normally ocurring during code transmission, and if the line circuit is open for this period, relay LCP closes its back contacts and by-passes the field line unit at the corresponding station. Thus the release of relay LCP completes a circuit from line XL on the office side of the station through back contact 28 of relay LCP, back contact 29 of relay SR, the winding of auxiliary line relay RXA and back contact 30 of relay SR to line XL leading to the next station. It will be seen that the path just traced is connected entirely around the field line unit and therefore by-passes both the main line relay RX for this circuit and also the transmitting relay contacts. A similar by-pass is provided for the other line circuit, including back contacts 31 of relay LCP and 32 of relay SR, winding of relay RYA and back contact 33 of relay SR.

It will be noted that the auxiliary line relays RXA and RYA are included in the by-passes which are connected around the station by the de-energization of relay LCP. If the line break which causes the operation of relay LCP was due to a faulty circuit within a field line unit, the completion of the by-passes at all of the stations will restore the line circuit, and current flowing through the by-passes will pick up the auxiliary line relays RXA and RYA at all stations except the one at which the fault occurred. The energization of relay RXA picks up relay RXR which thereafter sticks over its own front contact 34 and back contact 35 of relay LCP. Similarly, the energization of relay RYA picks up relay RYR which thereafter sticks over its own front contact 36 and back contact 35 of relay LCP. At all stations except the one including the fault or line break, the main line relays RY and RX also pick up. This causes the energization of relay LCP, which de-energizes RXR and RYR to restore the apparatus to normal.

At the faulty station where the break occurred the main line relays do not pick up and LCP remains de-energized and holds the relays RXR and RYR energized to prevent the operation of the sectionalizing equipment at that station. If the break within the limits of the faulty station becomes healed relays RXR and RYR are released to remove the by-pass at that station automatically.

If, however, the break in the line occurs between stations, so that by-passing by the operation of LCP does not restore both line circuits, then relays RXA and RYA do not pick up when the by-passes are completed around the field line unit, and after a delay time relay TH closes its front contact 37. The operating circuit for relay TH may be traced from terminal B over back contact 35 of relay LCP, back contact 36 of relay RYR, back contact 38 of relay SR, back contact 39 of relay THS and the heating element of relay TH to terminal C. When the thermal relay heats up and contact 37 thereof closes, current is supplied to relay THS, which picks up and is subsequently stuck up over its own front contact 39 and back contact 38 of relay SR. The energization of THS opens, at contact 39, the heating circuit for relay TH, and when the latter relay has cooled off at the completion of its timing period, a pick-up circuit is completed for relay SR over back contact 37 of TH and front contact 40 of relay THS to pick up relay SR. Relay SR is subsequently held energized over a stick circuit having two branches one over back contact 35 of relay LCP and the other over back contact 36 of relay RYR. The energization of relay SR also de-energizes relay THS.

The energization of relay SR completes the sectionalizing paths for both line circuits through the sectionalizing impedances SRX and SRY in a manner which will be apparent from the discussion above in connection with Figs. 1A and 1B. Furthermore, the energization of relay SR interposes the auxiliary relays RXA and RYA in the

line circuits extending to the next station more remote from the office in order to test these circuits for the release of the sectionalizing relay SR. In case the line break is healed, or in case the line is successfully sectionalized at a point more remote, the sectionalizing relay is released in a manner similar to that described above in connection with Fig. 1B.

The apparatus in Fig. 3 may be arranged to indicate the sectionalizing operation at the office, as in Fig. 1B, by connecting terminal B over front contact 41 of relay SR to terminal 49 of the field storage unit for the control of the starting relay SA.

In summarizing the operation of Fig. 3, it may be stated that if a break occurs in any line circuit, a by-pass is completed at each station for each of the line circuits. If these by-passes complete both line circuits, then the apparatus automatically removes all by-passes except the one at the station where the fault exists, and the system is therefore operable with all stations except the faulty one which has its by-pass retained in operation.

If the completion of the by-pass does not restore both line circuits, then the sectionalizing relays SR become energized to place the shunt paths across both line circuits at the corresponding stations. If sectionalizing establishes both line circuits, then all sectionalizing relays are released between the office and the station closest to the line break on the office side and the system is therefore operable between the office and the last station on the office side of the break. In the event of a break either in a field line unit or in a line wire between stations, the healing of the break will automatically restore the by-passing or sectionalizing equipment.

Although I have herein shown and described only several forms of remote control systems embodying my invention, it is understood that various changes and modifications may be made therein within the scope of the appended claims without departing from the spirit and scope of my invention.

Having thus described my invention, what I claim is:

1. A remote control system comprising an office and a plurality of stations connected by a plurality of line circuits normally energized from said office and extending from the office serially through said stations, a line relay in each circuit at each station, a sectionalizing relay at one station, a plurality of auxiliary line relays one for each circuit, means effective when said sectionalizing relay is energized for completing a shunt path across each said line circuit and for interposing each auxiliary line relay in the associated line circuit on the side of such shunt paths more remote from the office, a series of stick relays one for each auxiliary line relay, means controlled by said auxiliary line relays for energizing said stick relays if all of said line circuits are intact on the side of said shunt paths more remote from the office, and means controlled by said line relays and by said stick relays for energizing said sectionalizing relay.

2. A remote control system comprising an office and a plurality of stations connected by a plurality of line circuits normally energized from said office and extending from the office serially through said stations, a line relay in each circuit at each station, a sectionalizing relay at one station, means effective when said sectionalizing relay is operated to complete shunt paths across all of said line circuits at said one station, a timing contact closed at the expiration of a fixed time period after the opening of any one of said line circuits, a second contact closed at the expiration of a fixed time period after said timing contact closes, and means for energizing said sectionalizing relay in response to the closing of said second contact provided only one of said line circuits is then open.

3. A remote control system comprising an office and a plurality of stations connected by a plurality of line circuits normally energized from said office and extending from the office serially through said stations, a line relay in each circuit at each station, a sectionalizing relay at one station, a plurality of auxiliary line relays one for each circuit, means effective when said sectionalizing relay is energized for completing a shunt path across each said line circuit and for interposing each auxiliary line relay in the associated line circuit on the side of such shunt paths more remote from the office, a series of stick relays one for each auxiliary line relay, a pick-up circuit for each stick relay including a front contact of the associated auxiliary line relay, a stick circuit for each stick relay, a back contact on each stick relay included in circuit with the associated auxiliary line relay, a front contact of one of said stick relays included in circuit with the auxiliary line relay associated with another stick relay, means controlled by said line relays for energizing said sectionalizing relay, and means controlled by said stick relays for subsequently maintaining the sectionalizing relay energized.

4. A remote control system comprising an office and a plurality of stations connected by a plurality of line circuits normally energized from the office and extending from the office serially through said stations, a line relay in each circuit at each station, a normally deenergized sectionalizing relay at each station, means for energizing each sectionalizing relay upon the expiration of a fixed time interval following the deenergization of any line relay at the corresponding station, a plurality of auxiliary line relays one for each line circuit at each station, means effective when each sectionalizing relay is energized for completing a shunt path across each line circuit at the corresponding station and for interposing each auxiliary line relay at that station in the associated line circuit on the side of the shunt paths for that station more remote from the office, and stick circuits for each sectionalizing relay for retaining the relay energized until all of the associated auxiliary line relays have been energized.

5. In a remote control system comprising an office and a plurality of stations connected by a plurality of line circuits, a plurality of line relays one at the office and at each station in each line circuit, transmitting means at the office for alternately opening and closing said line circuits in different combinations to transmit coded signals to the stations, transmitting means at each station for opening all said line circuits to stations more remote from the office and thereafter alternately opening and closing the line circuits to the office in different combinations to transmit coded signals to the office, a checking contact at one station operated in response to an interruption of any line circuit, a timing relay controlled by said checking contact, a stick relay provided with a pick-up circuit controlled by said timing relay and with a stick circuit con-

trolled by said checking contact, a sectionalizing relay provided with a pick-up circuit controlled by said stick relay and by said timing relay, an auxiliary line relay for each line circuit, means effective when said sectionalizing relay is energized to interpose each auxiliary line relay in its associated line circuit and to complete a shunt path for each line circuit, a plurality of release relays each provided with a pick-up circuit controlled by the associated auxiliary line relay and with a stick circuit controlled by the sectionalizing relay, and a plurality of stick circuits for said sectionalizing relays one controlled by each of said release relays.

6. A remote control system comprising an office and a plurality of stations connected by a line circuit normally energized from the office and extending serially through said stations, a transmitter at each station effective when actuated to transmit to the office by means including the line circuit from such station to the office a signal characteristic of conditions at such station, receiving means at the office selectively responsive to such signal, register means controlled by said receiving means for displaying a persistent indication of conditions at each station, means set into operation by a break in said line circuit for cancelling the indications displayed by said register means, sectionalizing means at each station set into operation by a break in said line circuit for completing a shunt path across said circuit at the corresponding station, and means controlled by each sectionalizing means for actuating the associated transmitter to restore at the office the indications displayed by the register means for that station.

7. In a remote control system comprising an office and a plurality of stations connected by line wires, transmitting means at each station for transmitting to the office over said line wires signals characteristic of conditions at such station, receiving means at the office selectively responsive to such signals, register means controlled by said receiving means for displaying persistent indications after the termination of said signals, and means at the office, effective upon a break in any one of said line wires for cancelling the indications displayed by said register means.

8. A remote control system comprising an office and a plurality of stations, a plurality of line circuits normallly energized from the office and extending from the office serially through said stations, a line relay at the office in each said circuit, a transmitter at each station for transmitting code signals over said line circuit for operating said line relays, receiving means selectively controlled by said line relays, register means including a plurality of indication relays each provided with a pick-up circuit controlled by said receiving means and with a stick circuit, and means controlled by said line relays and responsive to a break in any one of said line circuits of longer duration than normally occurring during the transmission of code signals for breaking the stick circuit for all said indication relays.

9. A remote control system comprising an office and a plurality of stations, a line circuit normally energized from the office and extending from the office serially through said stations, a line unit at each station including code receiving and transmitting equipment interposed in said line circuit, means at each station responsive to a break in said line circuit for connecting a by-pass in said line circuit around the associated line unit, and means effective if the connection of said by-passes completes the line circuit to remove the by-pass at each station when the line circuit is intact through the associated line unit.

10. A remote control system comprising an office and a plurality of stations, a plurality of line circuits normally energized from the office and extending from the office serially through the stations, a line unit at each station including code receiving and transmitting equipment interposed in each line circuit, means at each station responsive to a break in any one of said line circuits for completing in each said line circuit a by-pass around the associated line unit, and means effective if the connection of said by-passes completes all of said line circuits to remove the by-passes from all of the circuits at each station when the line circuits are all intact through the associated line units.

11. A remote control system comprising an office and a plurality of stations, a plurality of line circuits normally energized from the office and extending from the office serially through the stations, a line unit at each station including code receiving and transmitting equipment interposed in each line circuit, means at each station responsive to a break in any one of said line circuits for completing in each said line circuit a by-pass around the associated line unit, means effective if the connection of said by-passes completes all of said line circuits to remove the by-passes from all of the circuits at each station when the line circuits are all intact through the associated line units, a sectionalizing relay at each station, means effective to operate said sectionalizing relays in response to a break in any one of said line circuits in the event said by-passes do not complete the line circuits, means effective when any sectionalizing relay is operated to complete a shunt path across all said line circuits at the corresponding station on the side of the line unit for that station more remote from the office, and means for restoring each sectionalizing relay when the line circuits are all intact at least as far as the next station more remote from the office.

12. A remote control system comprising an office and a plurality of stations connected by a plurality of line circuits normally energized from said office and extending from the office serially through said stations, a line relay in each circuit at each station, a sectionalizing relay at one station, a plurality of spare conductors one for a portion of each said line circuit, a plurality of auxiliary line relays one for each circuit, means effective when said sectionalizing relay is energized for replacing a portion of each line circuit by the associated spare conductor and for interposing each auxiliary line relay in the associated line circuit on the side of such one station more remote from the office, and means for controlling said sectionalizing relay by said line relays and by said auxiliary line relays.

13. A remote control system comprising an office and a plurality of line circuits normally energized from said office and extending from the office serially through said stations, a line relay in each line circuit at each station, a sectionalizing relay at one station having a back contact in each line circuit, a plurality of auxiliary line relays at said one station one for each said line circuit, means for connecting each auxiliary line relay across the back contact of said sectionalizing relay for the corresponding line circuit where-

by each auxiliary line relay will be energized when the sectionalizing relay is energized provided the associated line circuit is then complete, means controlled by the line relays at said one station for energizing said sectionalizing relay in response to the deenergization of any line relay, and means controlled by said auxiliary line relays for subsequently maintaining said sectionalizing relay energized as long as any auxiliary line relay is deenergized.

14. A remote control system comprising an office and a plurality of stations connected by a plurality of line circuits normally energized from said office and extending serially from the office through said stations, a line relay in each circuit at each station, a sectionalizing relay at one station having a back contact in each line circuit, a pickup circuit for said sectionalizing relay, means responsive to the deenergization of any line relay and effective at the end of a measured time interval following the opening of any line circuit for closing said pickup circuit, an auxiliary line relay and a release relay for each line circuit, means including a back contact of each release relay for connecting the associated auxiliary line relay across the back contact of the sectionalizing relay in the corresponding line circuit, means including a front contact of each auxiliary line relay for energizing the associated release relay, a stick circuit for each release relay, and means for maintaining said sectionalizing relay energized as long as any release relay is deenergized.

ARTHUR P. JACKEL.