(No Model.)

2 Sheets—Sheet 1.

I. B. ARCHER.

CHAIR ATTACHMENT.

No. 595,450.

Patented Dec. 14, 1897.

Fig. 1.

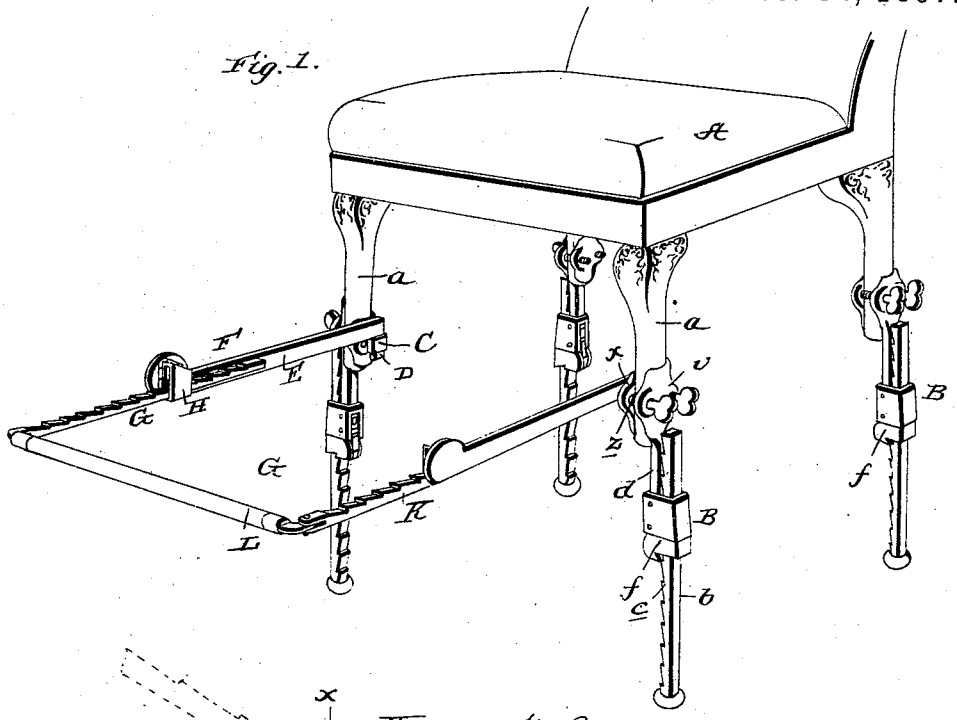

Fig. 2.

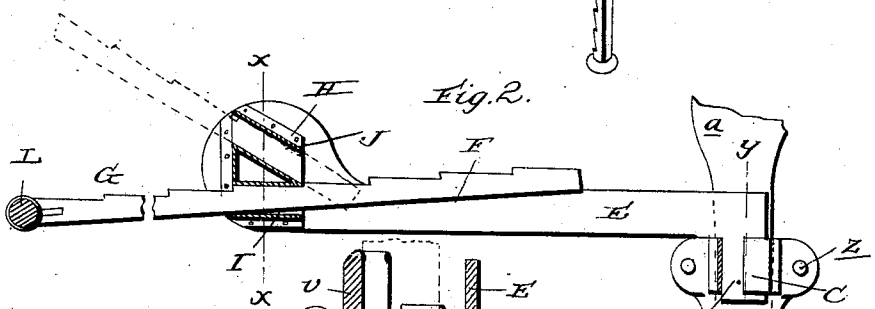

Fig. 3.

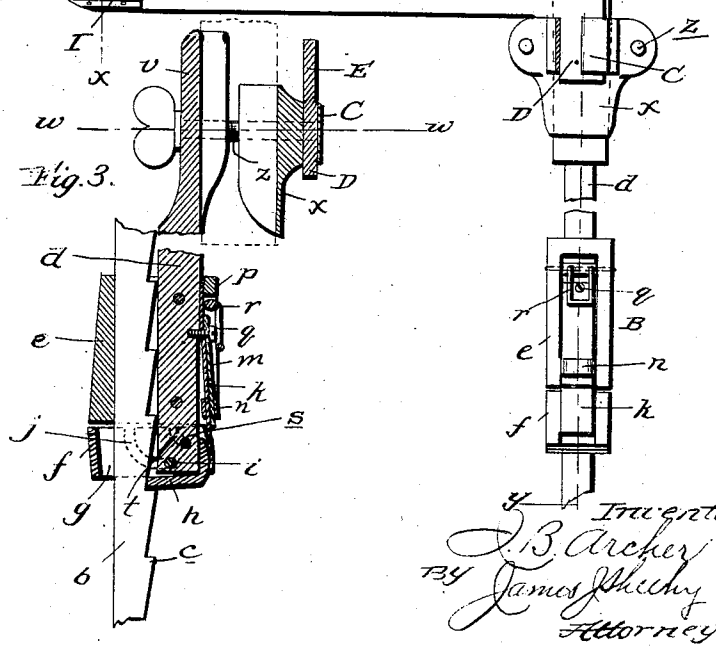

Witnesses:
[illegible] Raider
J. G. Cronney

Inventor
I. B. Archer
By James J. Shechy
Attorney

THE NORRIS PETERS CO., PHOTO-LITHO., WASHINGTON, D. C.

(No Model.) 2 Sheets—Sheet 2.

I. B. ARCHER.

CHAIR ATTACHMENT.

No. 595,450. Patented Dec. 14, 1897.

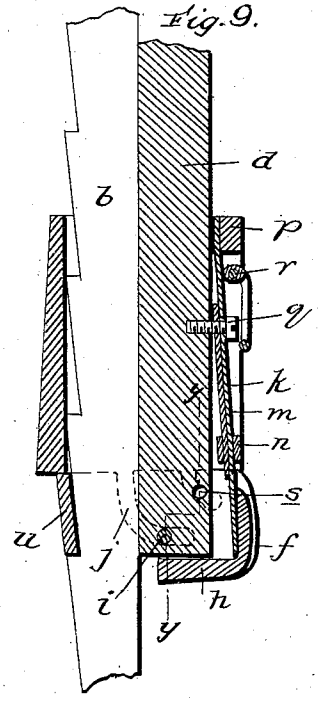

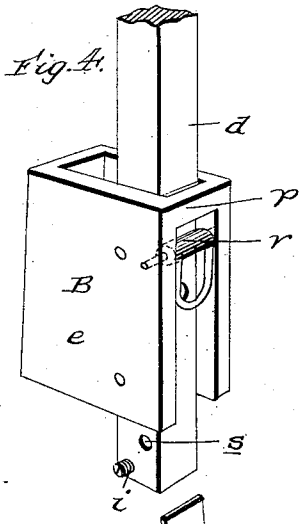

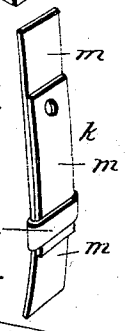

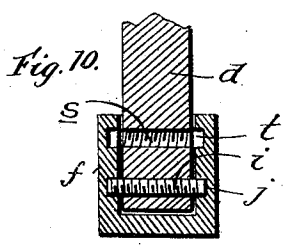

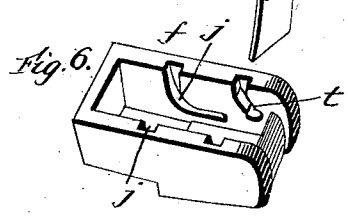

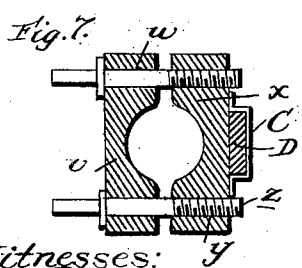

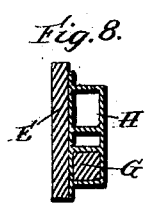

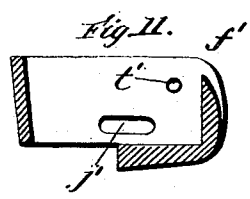

Witnesses:
C. H. Raeder
J. G. Cleroney

Inventor
I. B. Archer
By James J. Sheehy
Attorney

THE NORRIS PETERS CO., PHOTO-LITHO., WASHINGTON, D. C.

UNITED STATES PATENT OFFICE.

IRA B. ARCHER, OF NORTH SAN JUAN, CALIFORNIA.

CHAIR ATTACHMENT.

SPECIFICATION forming part of Letters Patent No. 595,450, dated December 14, 1897.

Application filed July 19, 1897. Serial No. 645,113. (No model.)

To all whom it may concern:

Be it known that I, IRA B. ARCHER, a citizen of the United States, residing at North San Juan, in the county of Nevada and State of California, have invented certain new and useful Improvements in Chair Attachments; and I do declare the following to be a full, clear, and exact description of the invention, such as will enable others skilled in the art to which it appertains to make and use the same.

My invention relates to improvements in chair attachments; and it has for its object to provide attachments adapted to be readily connected to the legs of a chair and adjustable, so as to support the chair at various elevations and also at various angles of inclination, so as to adapt it to be used as a barber's chair or dentist's chair.

Another object is to provide in conjunction with the chair-supporting attachments an adjustable foot-rest for the person seated in the chair.

The invention also contemplates detachably connecting the chair-supporting attachments and the foot-rest with a chair and so constructing the said attachments and foot-rest as to permit of them being conveniently carried about by traveling dentists, barbers, and the like.

Other objects and advantages of the invention will be fully understood from the following description and claims when taken in conjunction with the annexed drawings, in which—

Figure 1 is a perspective view of an ordinary chair equipped with my improved supporting attachments and foot-rest. Fig. 2 is an enlarged detail section illustrating the foot-rest and the manner of connecting the same to one of the supporting attachments. Fig. 3 is a detail section taken in the plane indicated by the line *y y* of Fig. 2. Fig. 4 is a detail perspective view illustrating the upper member of one supporting attachment and the box thereon for receiving and guiding the lower member, the spring carried by said box being omitted. Fig. 5 is a perspective view of the said spring removed from the box. Fig. 6 is a detail perspective view of the dog for engaging the teeth of the lower member of the supporting attachment and supporting the box and upper member. Fig. 7 is a section taken in the plane indicated by the line *w w* of Fig. 3. Fig. 8 is a section taken in the plane indicated by the line *x x* of Fig. 2. Fig. 9 is a detail section of a modification hereinafter referred to. Fig. 10 is a section taken in the plane indicated by the line *y y* of Fig. 9, and Fig. 11 is a sectional view illustrating a modified construction of dog.

Referring by letter to said drawings, and more particularly to Figs. 1 to 8 thereof, A indicates an ordinary chair having legs *a*, and B indicates my improved attachments for supporting the chair in a raised position, one of said attachments being connected to each leg *a*, as shown. These attachments B are similar in construction and therefore a description of the one illustrated in detail will suffice for all. This attachment B in the preferred embodiment of my invention comprises a lower member *b*, provided on one side with teeth *c*, an upper member *d*, a box *e*, fixedly connected to the upper member *d* and adapted to receive and guide the lower member *b*, and a dog *f*, disposed below the box *e* and adapted to engage the teeth *c* of the lower member *b* and thereby support the guide-box *e* and the upper member *d*, as better shown in Fig. 3. The dog *f* has an opening *g* in its bottom wall *h* of such a size as to permit it to move in the direction of its length on the lower member *b*, and it is connected to the upper member *d* by the extended ends of a removable transverse pin *i* in said member *d*, whose ends rest in the grooves *j* in the inner sides of its side walls, as shown. The grooves *j* have the lower horizontal portions, as shown, and consequently it will be perceived that they will permit the dog *f* to move in the direction of its length on the upper member *d*, so as to enable its wall *h* to be placed in engagement with and disengaged from the teeth *c*. The said dog *f* is normally held in engagement with the teeth *c* of the lower member *b* by a flat spring *k*, which is arranged in the open side of the box *e*, between the side walls thereof, and bears against one end of the dog, as shown. The said spring *k* preferably comprises two leaves *m*, adjustably connected by a loop *n*, whereby its strength may be increased or diminished, as desired, and it may be secured in position by having its upper end interposed between the portion *p* of the box *e* and the upper member *d* by connect-

ing it to the member *d* by a screw *q* or by binding it against said member *d* by a cam-lever *r*, pivotally connected to the box *e*, or by all of these, as desired. It is obvious, however, that when the screw *q* is employed alone or in conjunction with the other fastening devices the leaves of the spring cannot be adjusted with respect to each other.

In virtue of the construction thus far described it will be seen that when it is desired to increase the length of the attachment B it is simply necessary to draw the members *b e* in opposite directions, when the teeth *c* of the member *b* will ride over the engaging wall *h* of the dog *f*. When, however, weight is imposed on the upper member *d*, it will be seen that the dog will be supported by the tooth of the lower member *b* and will serve in turn to support the box *e* and the upper member *d*. When weight is imposed on the upper member *d* and it is desired to lower the same, it is simply necessary to strike the end of the dog *f* opposite to that against which the spring bears a sharp blow with a hammer, so as to move the dog in the direction of its length, when the dog will be disengaged from the tooth *c* of the member *b*, and moving downwardly by reason of the weight on the upper member will automatically engage the next lower tooth.

It is desirable in some cases for the sake of safety to fix the dog *f* against endwise movement and thereby prevent adjustment of the members *b d* with respect to each other. To this end I provide an additional transverse aperture *s* in the upper member *d* to receive the removable pin *i* and the grooves *t* in the side walls of the dog *f* to receive the extended ends of the removable pin *i* when the same is in the aperture *s* of the member *d*.

When the dog *f* is to be fixed against endwise movement and the members *b d* fixed against movement with respect to each other, the member *b* is drawn downwardly and out of the box *e* and the opening in the dog *f*. The said dog is then removed from the member *d*, and the pin *i* is removed from the lower aperture in member *d* and placed in the upper aperture *s* thereof. With this done the member *b* is replaced in the opening of the dog *f* and box *e* and the said dog *f* is moved upwardly, so as to enable the extended ends of the pin *i* to enter the mouth of its grooves *t* and seat in the inner ends thereof. Such upward movement of the dog will be accompanied by an endwise movement thereof, which will carry its engaging wall *h* into engagement with one of the teeth of the member *b*. When the parts are in the position just stated, it will be seen that so long as weight is imposed on the upper member *d* the dog will be held against endwise movement and the members *b d* will be locked against movement with respect to each other. With the parts connected as just described it is simply necessary in order to disconnect the members *b d* to draw the member *b* downwardly. This will move the dog *f* in an endwise direction and permit it to be drawn out of engagement with the ends of pin *s* and off the end of member *d*.

In lieu of the dog *f* a dog *f'*, (see Fig. 11,) having elongated openings *j'* and openings *t'* in its side walls, may be employed, if desired.

When desired, the end wall *u* of the dog *f* may be used instead of the wall *h* to engage the teeth *c* of the member *b*, as shown in Fig. 9. When this is done, the side of the member *b* opposite to the toothed side is placed contiguous to the member *d*, and the spring *k*, instead of being placed in engagement with the outer side of the end wall of the dog, is placed in engagement with the inner side of said wall, so as to normally hold the opposite end wall in engagement with the teeth *c* of the member *b*. This construction operates like that shown in Figs. 1 to 8 and permits of the support attachment being increased or diminished in length whether it is supporting a weight or not.

The upper members *d* of the attachments B terminate at their upper ends in clamp-sections *v*, (see Fig. 7,) which have apertures *w* and serve, in conjunction with sections *x*, having threaded apertures *y* and screws *z*, to detachably connect the attachments to the legs of a chair, as shown in Fig. 1. When it is desired to support the chair with its seat in a horizontal position, the attachments B are made equal in length; but when it is desired to support the chair in a backwardly-inclined position the same may be accomplished by simply making the rear attachments B shorter than the front attachments. In this way it will be appreciated that an ordinary chair may be readily adapted for use as a convenient barber's or dentist's chair. It will also be appreciated that when made of metal or other suitable material the attachments B may be conveniently carried by a traveling dentist or barber and readily placed on an ordinary chair at the home of the patient or customer.

The inner sections *x* of the connecting-clamps of the front attachments B are provided with loops C, and in these loops are removably placed the depending portions D of the inner sections E of the arms F of the foot-rest G. The said sections E terminate at their outer ends in enlargements, and these enlargements are provided on their inner sides with boxes H, having horizontal sleeves I and oblique sleeves J, as better shown in Fig. 2. These sleeves I J are designed to receive the toothed outer sections K of the arms F, which outer sections K are connected at their outer ends to the ends of a cross-bar L, such connection being preferably a hinged one, as shown, so as to permit of the sections K being folded upon the cross-bar when not in use, so as to take up but a minimum amount of space when the foot-rest is packed for shipping.

When the sections K of the foot-rest are

placed in the sleeves I of the boxes H, it will be seen that said sections K will be held in a horizontal position and will also be held against outward movement, no matter how hard the person seated in the chair presses against the bar L. When the sections K are placed in the sleeves J, it will be seen that said sections will be held in an inclined position, but will also be held against outward movement when pressure is imposed on the bar L. When pressure is removed from the bar L, the sections K, whether in the sleeves I or J, may be readily moved outward, it being simply necessary to press their outer ends upward, so as to enable their teeth to clear the rear end walls of the sleeves.

It will be appreciated from the foregoing that my improvements, while very cheap and simple, are such that an ordinary chair may be quickly and easily converted into a convenient dentist's or barber's chair without the employment of skilled labor and also without the employment of tools. It will also be seen that the attachments may be as readily disconnected from a chair, and that their use in conjunction with a chair does not mar or otherwise injure the legs thereof.

While the supports or attachments B are adapted especially for supporting a chair in a raised position, I do not desire to be understood as confining myself to such use, as said supports may be used in conjunction with scaffolds, platforms, and other devices to be supported.

Having thus described my invention, what I claim is—

1. In a support, the combination of a lower toothed member, an upper member, a guide receiving the members and connected to the upper member, the dog formed in one piece and disposed below the guide and receiving and loosely connected to the lower end of the upper member so as to enable it to move in the direction of its length on the same and having the bottom wall adapted to engage the teeth of the lower member and the opening in said wall loosely receiving said lower member, and a spring connected to the guide and exerting pressure against the dog, substantially as specified.

2. The combination of a chair having legs and the attachments detachably connected to the legs of the chair and respectively comprising a lower toothed member, an upper member, a guide receiving the members and connected to the upper member, the dog formed in one piece and disposed below the guide and receiving and loosely connected to the lower end of the upper member so as to enable it to move in the direction of its length on the same and having the bottom wall adapted to engage the teeth of the lower member and the opening in said wall loosely receiving said lower member, and a spring connected to the guide and exerting pressure against the dog, substantially as specified.

3. In a support, the combination of a lower toothed member, an upper member, a pin arranged in and having its ends extending from opposite sides of the upper member, a guide receiving both members and connected to the upper member, a dog receiving the upper member and receiving and adapted to engage the teeth of the lower member; said dog having elongated seats in its side walls receiving the ends of the pin in the upper member whereby the dog is enabled to move in the direction of its length, and a spring connected to the guide and exerting pressure against the dog, substantially as specified.

4. In a support, the combination of a lower toothed member, an upper member having transverse apertures and a removable pin with extended ends arranged in one of said apertures and adapted to be removed and placed in the other aperture, a guide connected to the upper member and receiving the lower member, and a dog receiving the upper member and receiving and adapted to engage the teeth of the lower member; the said dog having seats in its side walls adapted to receive the extended ends of the removable pin when the same is in one transverse aperture of the upper member so as to hold the dog in engagement with a tooth of the lower member and also having other seats in its side walls adapted to receive the extended ends of the removable pin when the same is in the other transverse aperture of the upper member so as to permit of the dog being moved out of engagement with the teeth of the lower member when desired, substantially as specified.

5. The combination of a chair having legs, attachments connected to said legs and adapted to support the chair in a raised position, and a foot-rest comprising arms having inner sections detachably connected to the front supporting attachments and provided with sleeves and outer sections toothed on their upper sides and extending through the sleeves of the inner sections, and a cross-bar connecting said outer sections, substantially as specified.

6. The combination of a chair having legs, attachments connected to said legs and adapted to support the chair in a raised position, and a foot-rest comprising arms having inner sections detachably connected to the front supporting attachments and provided with boxes having horizontal and inclined sleeves, and removable outer sections toothed on their upper sides and adapted to extend through the sleeves of the inner sections, and a cross-bar connected in a hinged manner to the outer sections of the arms, substantially as specified.

In testimony whereof I affix my signature in presence of two witnesses.

IRA B. ARCHER.

Witnesses:
JAMES E. DUNPHEY,
W. B. MEEK.