April 15, 1930. H. W. PLEISTER ET AL 1,754,333

BOLT ANCHOR

Filed Feb. 15, 1929 2 Sheets-Sheet 1

Fig 1

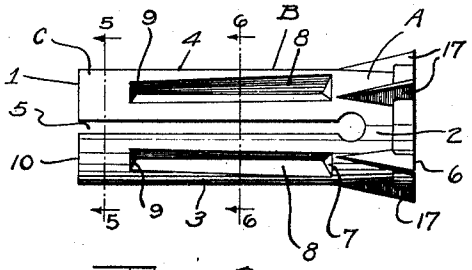

Fig 2

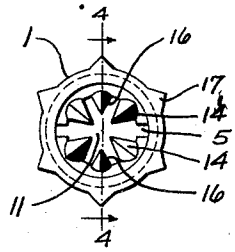

Fig 3

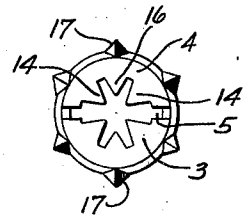

Fig 4

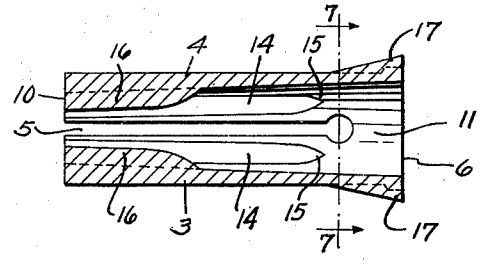

Fig 5

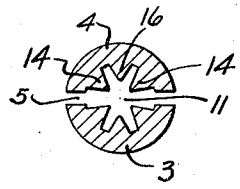

Fig 6

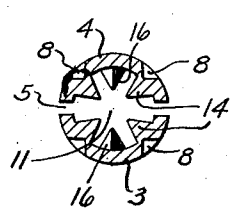

Fig 7

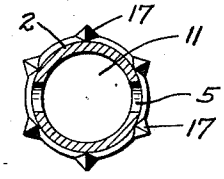

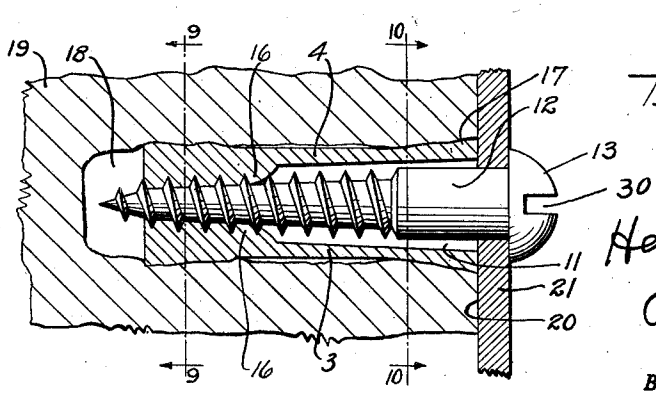

Fig 8

Henry W. Pleister
John Karitzky
INVENTORS

BY Alan M. Johnson
ATTORNEY.

April 15, 1930. H. W. PLEISTER ET AL 1,754,333

BOLT ANCHOR

Filed Feb. 15, 1929 2 Sheets-Sheet 2

Fig 9

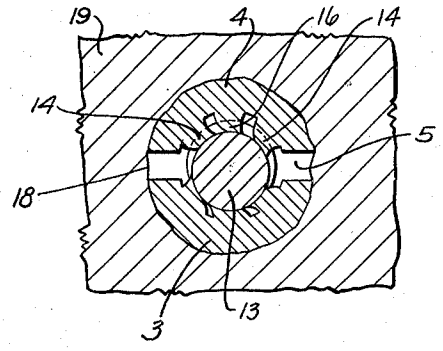

Fig 10

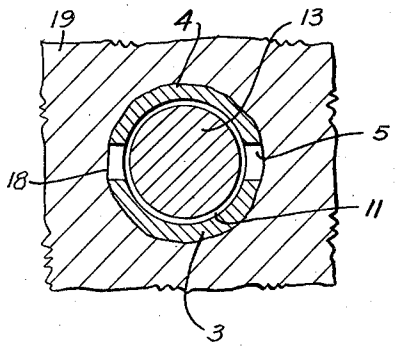

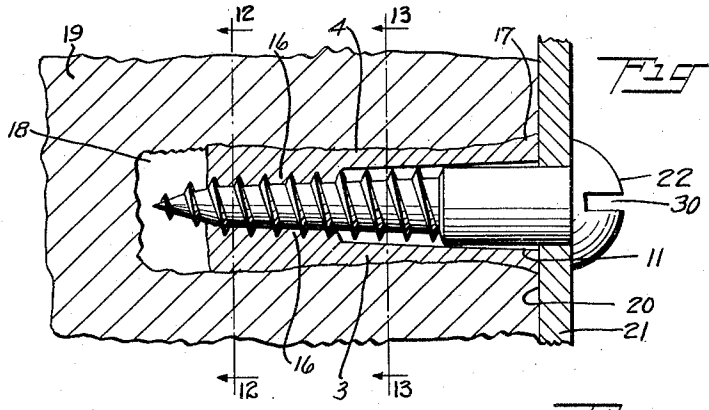

Fig 11

Fig 13

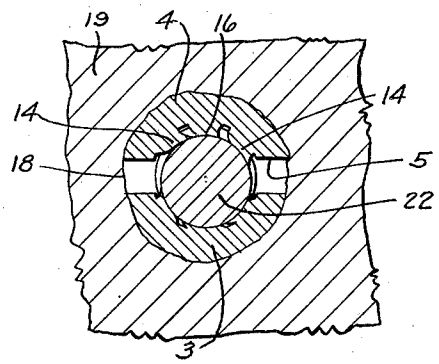

Fig 12

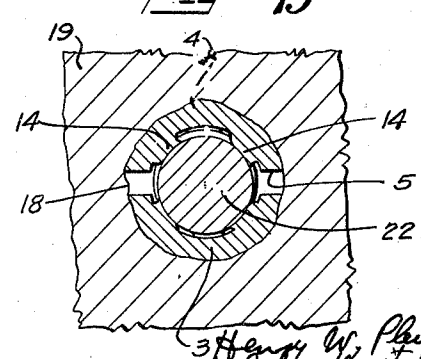

Henry W. Pleister
John Kantzlay
INVENTORS

BY Clarke Johnson

ATTORNEY.

Patented Apr. 15, 1930 1,754,333

UNITED STATES PATENT OFFICE

HENRY W. PLEISTER, OF WESTFIELD, AND JOHN KARITZKY, OF GARWOOD, NEW JERSEY, ASSIGNORS TO HENRY B. NEWHALL CORPORATION, OF GARWOOD, NEW JERSEY, A CORPORATION OF NEW JERSEY

BOLT ANCHOR

Application filed February 15, 1929. Serial No. 340,278.

Our invention relates to bolt anchors and more particularly to a ductile bolt anchor which will permit a particular size bolt anchor to be used with the greatest possible range of screws or other expanding means, of different sizes or diameters.

Our invention further relates to an article of manufacture, combinations and details of construction, which will be more fully hereinafter described in the specification and pointed out in the claims.

Our invention is to be considered in connection with U. S. Patent 1,499,071, Henry W. Pleister, dated June 24, 1924, and is an improvement thereon.

In the accompanying drawings showing an illustrative embodiment of our invention, and in which the same reference numerals refer to similar parts in the several figures:—

Fig. 1 is a side elevation of the preferred form of our bolt anchor.

Fig. 2 is a front elevation of the outer end of the bolt anchor.

Fig. 3 is a rear elevation of the inner end of the bolt anchor.

Fig. 4 is a longitudinal vertical section on the line 4—4 of Fig. 2, looking in the direction of the arrows.

Fig. 5 is a transverse vertical section on the line 5—5 of Fig. 1 looking in the direction of the arrows.

Fig. 6 is a transverse vertical section on the line 6—6 of Fig. 1, looking in the direction of the arrows.

Fig. 7 is a transverse vertical section on line 7—7 of Fig. 4, looking in the direction of the arrows.

Fig. 8 is a vertical section through a wall or other suitable support, the work and the bolt anchor, a small screw being shown co-operating with the bolt anchor.

Fig. 9 is a cross section on line 9—9 of Fig. 8, looking in the direction of the arrows.

Fig. 10 is a cross section on line 10—10 of Fig. 8, looking in the direction of the arrows;

Fig. 11 is a vertical section through a wall or other suitable support, illustrating a large screw co-operating with the ductile anchor.

Fig. 12 is a cross section on line 12—12 of Fig. 11.

Fig. 13 is a cross section on line 13—13 of Fig. 11.

In installing attachments, such as electrical fixtures, insulator brackets, cable clamps, bridle rings, or any form of attachment, which vary in size and duty to be performed, different size bolt anchors and particular size screws, to fit the particular size bolt anchor, have to be used. This requires a contractor to keep in stock and to send out his mechanics with several sizes of bolt anchors and corresponding sizes of screws, to fit the different size bolt anchors. To drill the holes for the ductile bolt anchors, the different size drills, to correspond with the particular size ductile anchor, have to be bought and kept on hand.

By our present invention we permit work, of the greatest possible range, to be held to a wall or other suitable support by a ductile anchor of a given size. In our present invention, for example, with a given size ductile anchor we may use variable diameters of screws, for example, from #10 to #14. This eliminates the necessity of the contractor carrying in stock ductile anchors of intermediate sizes. This also permits the contractor to equip his mechanics with one size ductile anchor and one size drill to perform practically all the work that they will be required to perform on a given job, which ordinarily would require different size bolt anchors and corresponding screws. It will be seen, therefore, that his investment in ductile anchors need be only a few sizes, for each size will accommodate numerous sizes of screws, bridle rings or other expanding means. Our invention also saves confusion and error on the part of the mechanics in using the wrong bolt anchor, in the wrong place and greatly simplifies the work and reduces the cost of installation.

In addition to the advantages just enumerated, the bolt anchor built in accordance with our invention, has three zones, the advantage of which will be more fully hereinafter pointed out in the specification and claimed in the claims.

We have, for purposes of illustration,

shown the preferred form of our invention in the drawings. It is, of course, to be understood that our invention is not to be confined to the form shown, except as limited by our claims.

Our bolt anchor 1 is provided with a body member 2, usually in the form of a ring, to which are connected a plurality of tines, two integral tines 3 and 4 being preferably employed with an intermediate slot 5 separating them. The number of tines may, of course, be varied without departing from our invention.

Our bolt anchor is provided with three zones, zone A, being at the outer end of the anchor, extending from the outer face 6 to the beginning 7 of the exterior longitudinally extending grooves or voids 8, 8. Zone B extends from the points 7, 7 to the points 9, 9; and zone C extends from the points 9, 9 to the inner end 10 of the bolt anchor.

That portion of the axial bore 11 in zone A is enlarged and free from ribs to co-operate with the threads of the screw. Preferably it is formed of such a diameter as not to exert any appreciable friction upon the unthreaded shank 12 of a screw 13, Fig. 8. The interior of zone B is provided with a plurality of longitudinally extending ductile ribs 14, 14 beginning at the points 15, 15 in the axial bore 11, and extending to the inner end 10 of the bolt anchor.

We have shown four of the primary ribs 14, 14, though, of course, this number may be varied, without departing from our invention. Zone C is not provided with exterior grooves or voids 8, 8. Preferably, though not necessarily, the interior of zone C is provided with secondary longitudinally extending ribs 16, 16, which extend inward from the inner end 10 of the bolt anchor, but not to the same distance as the primary ribs 14, 14.

The exterior of the bolt anchor is also preferably, though not necessarily, provided with short ribs 17, 17, to engage with the surface of the hole 18 in a wall or other suitable support 19, formed of masonry, brick, terra cotta, concrete or similar materials, against the surface 20 of which the work 21 is to be supported.

With a small size screw 13, for the particular size bolt anchor 1, the screw will pass freely into the axial bore 11, without engaging with the inner surface of zone A, until the threads on the screw engage with the longitudinally extending ribs 14, 14 in zone B. They will then cut co-operating female threads in these ribs without substantially wiping or displacing the ribs, and will then engage with the secondary longitudinally extending ribs 16, 16, if such ribs are employed, so that the maximum expansion of the bolt anchor will occur in zone C, which zone exerts the maximum resistance to the passage of the screw, which resistance will be well back from the face 20 of the wall of brick or other material 19. If the longitudinally extending ribs 14, 14 are placed in radial alignment with the exterior grooves 8, 8, which is our preferred construction, the metal of zone B will be more readily distorted on the insertion of the co-operating screw, so as to fill up, more or less, depending on the size of the screw, the exterior voids or valleys 8, 8.

It is to be understood, however, that in some cases, these ribs 14, 14 may not be placed in radial alignment with the exterior grooves 8, 8. With the largest screw 22, for the particular size bolt anchor, the interior longitudinally extending ribs 14, 14 and 16, 16, will be wiped over or mashed down by the screw, Fig. 12, and the exterior valleys or voids 8, 8 will be substantially eliminated by the distortion of the metal, as shown in Fig. 13.

Some of the advantages of having a bolt anchor provided with our different zones are as follows:

Zone A, is provided with a large axial bore, devoid of longitudinally extending ribs or threads. This permits the unthreaded shank of the largest wood screw, to be used with a particular size bolt anchor, to pass freely into the bolt anchor, without exerting friction upon the anchor, particularly during the greatest expansion of the anchor, which permits all the power to be exerted to expand the anchor, without wasting a considerable portion of it to overcome the friction of the unthreaded shank 12 of the screw in the anchor. If the friction of the unthreaded shank 12 of the screw and the expansive force necessary to expand the anchor is excessive, the walls of the slot 30 in the screw head will be broken down, necessitating the withdrawal of the screw and the use of a new one, with the loss of valuable time.

Zone B permits the easy insertion of either a small or large screw. This zone has great flexibility in that it permits the ready insertion of a large screw 22 by displacing the metal and filling up, more or less, depending upon the size of the screw, the exterior grooves or voids 8, 8. No excessive, or undue effort, is required, to permit even a large screw 22 to be inserted in the bolt anchor.

Zone C, has a maximum amount of metal at the inner end to increase the pressure of the shield or bolt anchor against the surface of the hole 18, and give a maximum grip or bond at this point of the bolt anchor. This insures, in addition, that the most powerful expansion is located in the hole 18 as far as possible from the face 20 of the brick or other support 19, to prevent chipping, spalling, or otherwise marring the wall. This zone C also concentrates, or limits, the hard turning of the screw driver in the hands of the operator, to the minimum number of turns, which will be when the screw is about screwed home. Our bolt anchor relieves the operator of pro-

longed hard pressure on the screw driver while the screw is passing through zones A and B.

Having thus described this invention in connection with an illustrative embodiment thereof, to the details of which we do not desire to be limited, what is claimed as new and what is desired to secure by Letters Patent is set forth in the appended claims.

What we claim is:

1. A new article of manufacture comprising a ductile anchor, provided with a body member and a plurality of tines, and an axial bore, longitudinally extending ribs mounted on the interior of the tines, but not extending into the body member, the tines being provided with longitudinally extending grooves or voids, but not extending to the innermost end of the tines, to insure flexibility of the tines and easy entrance into the bolt anchor of a relatively large screw, the innermost ends of the tines being ungrooved to increase the pressure of the anchor against an operating screw and against the surface of a hole, thereby giving a more powerful gripping expansion at the inner end of the anchor away from the face of a support and concentrating the hardest turning of a screw to the minimum number of turns when the screw is about set up.

2. A new article of manufacture comprising a ductile anchor, provided with a body member and a plurality of tines and an axial bore, primary longitudinally extending ribs mounted on the interior of the tines, but not extending into the body member, secondary longitudinally extending ribs mounted on the interior of the tines and extending in from the inner end of the bolt anchor in the same direction as the primary longitudinally extending ribs, but of less length, the tines being provided with longitudinally extending grooves or voids, but not extending to the innermost end of the tines, to insure flexibility of the tines and easy entrance into the bolt anchor of a relatively large screw, the innermost ends of the tines being ungrooved to increase the pressure of the anchor against an operating screw and against the surface of a hole, thereby giving a more powerful gripping expansion at the inner end of the anchor away from the face of a support and concentrating the hardest turning of a screw to the minimum number of turns when the screw is about set up.

HENRY W. PLEISTER.
JOHN KARITZKY.