May 12, 1931. K. S. VALENTINE 1,804,966

MIXING, DISSOLVING, OR DISPERSING APPARATUS

Filed April 4, 1929 2 Sheets-Sheet 1

Fig. 1.

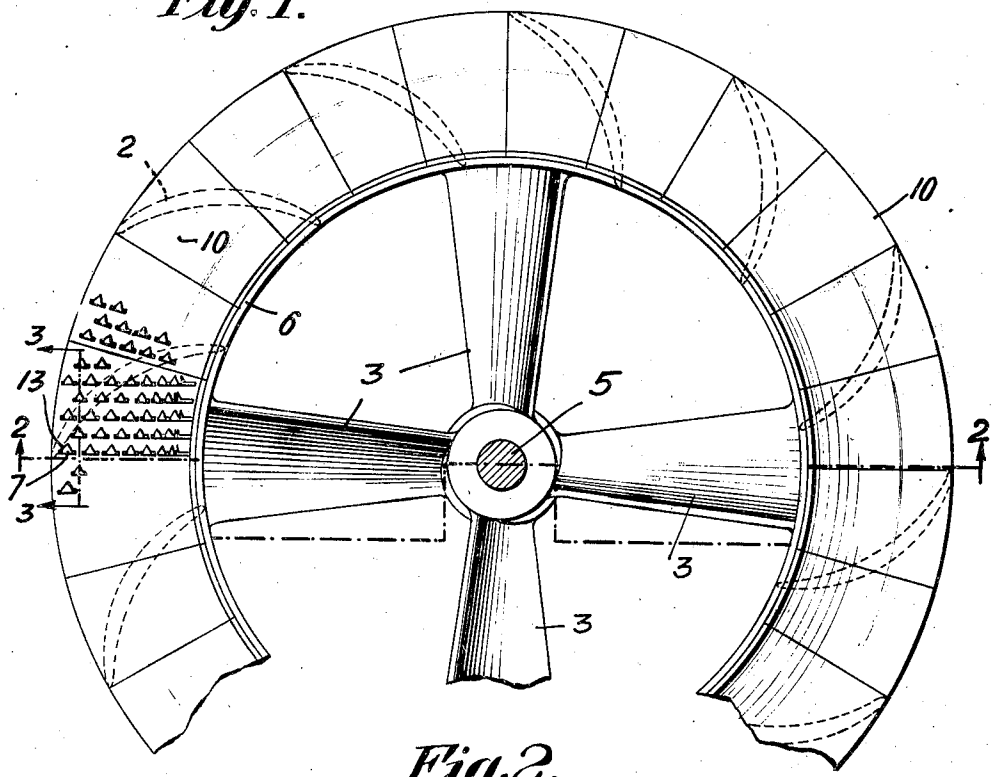

Fig. 2.

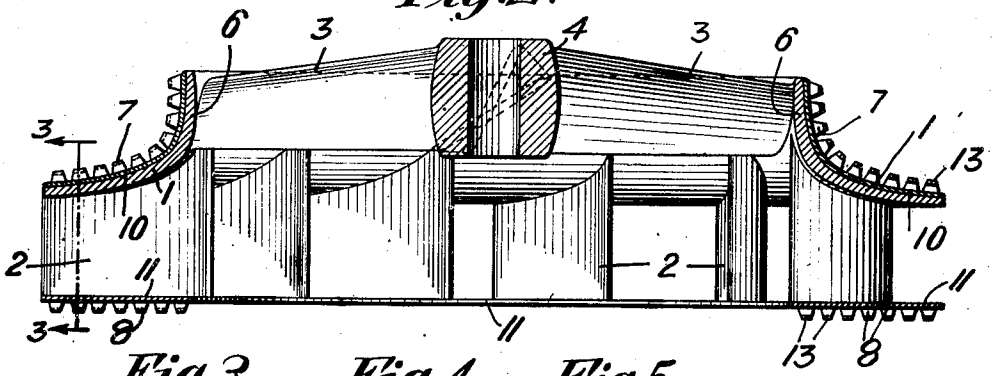

Fig. 3.

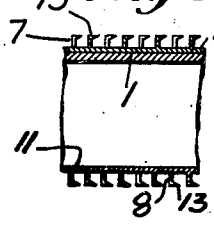

Fig. 4.

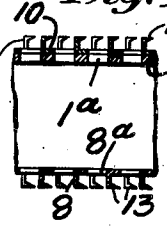

Fig. 5.

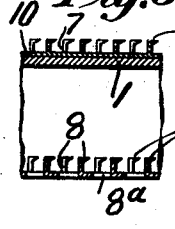

INVENTOR
Kenneth S. Valentine
BY
Frank A. Lewis
ATTORNEY

May 12, 1931. K. S. VALENTINE 1,804,966

MIXING, DISSOLVING, OR DISPERSING APPARATUS

Filed April 4, 1929 2 Sheets-Sheet 2

Fig. 8.

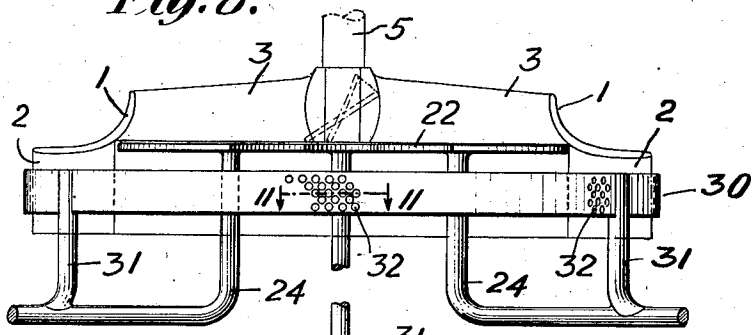

Fig. 10.

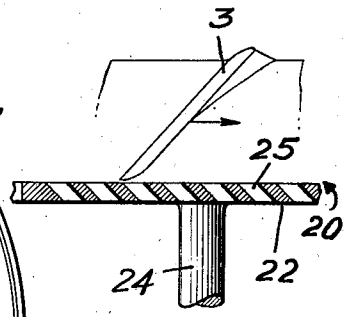

Fig. 9.

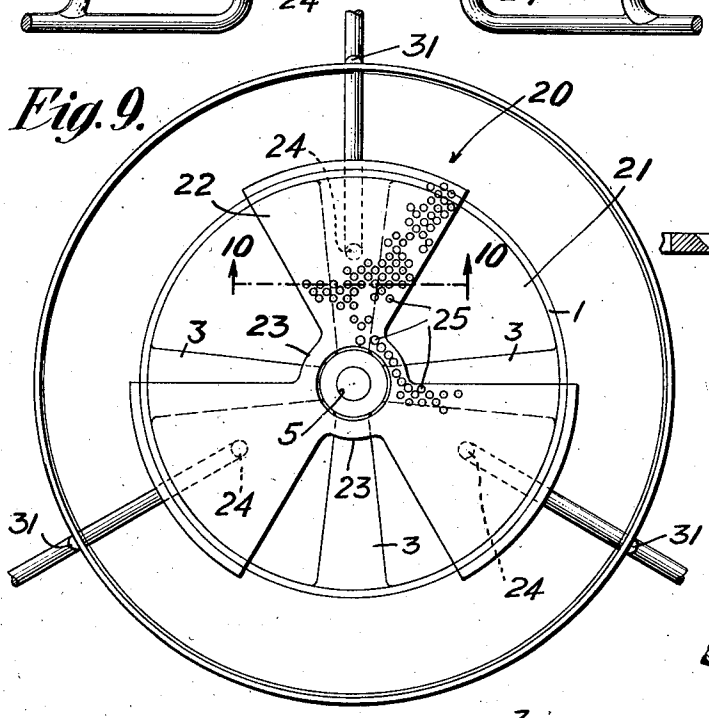

Fig. 11.

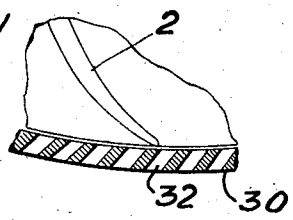

Fig. 6.

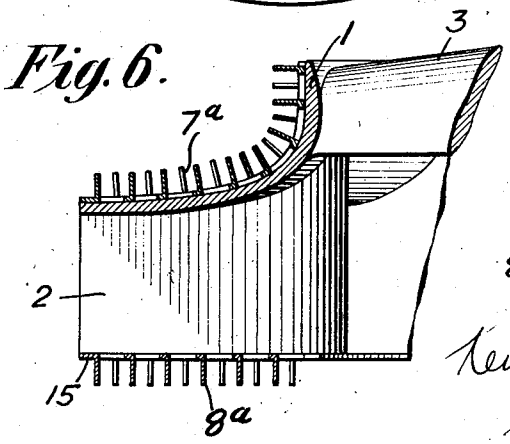

Fig. 7.

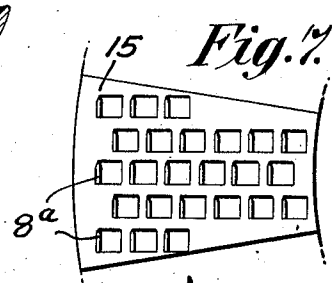

Kenneth S. Valentine INVENTOR

BY

Frank L. Kent ATTORNEY

Patented May 12, 1931 1,804,966

UNITED STATES PATENT OFFICE

KENNETH S. VALENTINE, OF HOLLIS, NEW YORK, ASSIGNOR TO THE TURBO-MIXER CORPORATION, OF NEW YORK, N. Y., A CORPORATION OF NEW YORK

MIXING, DISSOLVING OR DISPERSING APPARATUS

Application filed April 4, 1929. Serial No. 352,359.

My invention relates to apparatus for mixing, dissolving or dispersing various materials or mixtures including liquids containing solids, viscous solutions, and a great variety of other materials.

One important object is to provide for rapid, thorough and efficient reduction and mixing of solids in liquids, and dissolving, dispersion or exceedingly thorough and uniform distribution of colloidal or other particles throughout a liquid.

To these ends the invention consists, as broadly described (in cooperation with a tank and a mixer of known or suitable type therein), in blades, teeth, or analogous devices upon or associated with parts of the mixer, and grids or screens cooperating with the mixer and preferably having a shearing or tearing function, to effectively act upon the materials for the purposes stated and in ways hereafter explained in detail. The blades, teeth, or analogous devices, and the grids or screens, may be employed together or separately, as conditions require.

The dissolving, dispersing, or other devices are so arranged that the vigorous, normal circulation of material by the circulating or mixing means, is not impeded.

The characteristics and advantages of the invention are further sufficiently explained in connection with the following detail description of the accompanying drawings, which shows representative embodiments. After considering these examples, skilled persons will understand that many variations may be made without departing from the principles disclosed, and I contemplate the employment of any structures that are properly within the scope of the appended claims.

In the drawings:

Fig. 1 is a top plan of a mixer, or impeller of the turbo type, embodying the invention in one form.

Fig. 2 is a section at 2—2, Fig. 1.

Fig. 3 is a section at 3—3, Figs. 1 and 2.

Fig. 4 is a similar section of a modified construction.

Fig. 5 shows another modification.

Fig. 6 shows still another modification.

Fig. 7 is a top plan of a blade plate, as employed in Fig. 6.

Fig. 8 is an elevation of one grid or screen arrangement, in cooperation with a typical mixer rotor of the turbo type.

Fig. 9 is a top plan of the same.

Fig. 10 is a section at 10—10, Fig. 9.

Fig. 11 is a section at 11—11, Fig. 8.

Referring first to Figs. 1 and 2, the structure therein shown is the rotor or impeller of a turbo mixer of known type including an upper annular plate 1 carrying blades 2 and connected by arms 3 to a hub 4 located on a supporting and driving shaft 5. Such a rotor is generally used in cooperation with a stationary deflector surrounding it, and the complete mixer, including the rotor and deflector, are placed in a suitable location in a tank. In the broader aspect of the invention, the rotor or impeller represents any known or suitable means for producing the general circulation of the material.

Arms 3 are arranged to produce a centripetal flow of material to the central zone of the rotor through the entrance passage provided by the upturned portion 6 of plate 1, and this material is discharged in generally tangential directions by the curved blades 2 and then acted on by the deflector, as well understood in the art.

To improve the action of such rotors, for present purposes, I provide at suitable locations thereon a multiplicity of blades 7 and 8. Blades 7 are applied to the upper or outer face of plate 1, and blades 8 are arranged at the bottoms of the main rotor blades 2. Any or all of the blades, such as 7, and 8 may be employed together as conditions require. The blades or baffles, such as 7 and 8, are desirably secured to or formed on plates such as 10 and 11, and most desirably the baffles or blades are produced by punching and stamping the plates 10 and 11 to produce the blades or baffles extending perpendicularly to the plate surfaces; and the plates are secured in the desired locations on the rotor, the plates 10 carrying blades 7 being suitably curved to conform to the contour of the upper rotor plate 1. Desirably the bladed plates are sector shaped so that when as-

sembled as shown they produce complete toothed plate formations extending circumferentially about the rotor.

Desirably, in some cases, the baffles or blades 7 have their outer ends bent over at right angles and formed as sharp or pointed teeth 13, and so also with regard to blades 8 or any of them, as best shown in Figs. 1 and 3. Fig. 4 shows a modification in which plate 1 of the rotor is provided with apertures 1*a* corresponding to the apertures of the blade plate 10, thus permitting a certain proportion of circulated material to be then acted on by the baffle blades or teeth 7, 13 as later referred to, and then to pass through the plate apertures. The lower plate or plate segments 11 may be imperforate as shown in Fig. 3 and then forms a lower closure for the main blades 2, or they may be provided with blades formed by cutting and punching, to permit movement of a part of the material through the apertures 8*a*. Fig. 5 shows the upper main rotor plate 1 imperforate and the lower blade plate 11 perforated, as in Fig. 4.

Any of the baffle blades or teeth may be located on inward, instead of outward, surfaces of the rotor. Thus, Fig. 5, shows teeth 8 directed upward, into the path of flow between main blades 2; and teeth such as 7, Fig. 2, may be placed on inward, or lower surfaces of plate 1.

In such locations, or any of the locations described, the teeth do not materially impede normal circulation of material, which is produced by the main blades 2 and centripetal arms or blades 3; such blades are preferably left "smooth", and free from baffle blades or teeth.

In operation, the major portion of the material flows, as usual, over the main blade surfaces, between the upper and lower plates, but a part of the circulated material flows over the upper or outer surface of plate 1 or toothed plate 10 thereon; a portion also flows along the under face of plate 11, and the baffle blades or teeth, such as 7 and 8, by reason of their location in the moving impeller act upon large or small bodies of solids to quickly reduce them to desired sizes and also act upon all the materials including small or colloidal particles, or upon viscous material, to attenuate, tear, shear or separate the various ingredients, and disperse solids, etc. rapidly and uniformly throughout the body of the material, such dispersion or distribution of particles being much more thorough than has heretofore been possible and being obtained in much smaller time than is possible without the provision of diffusing, dissolving or mixing baffles or blades such as 7 and 8. The impeller, or analogous circulating means, produced a constant and vigorous circulation of the material, and the dispersing or analogous baffle blades or teeth are so arranged that this normal circulation is not substantially impeded.

Figs. 6 and 7 illustrate a modification in which blades, such as 7*a* and 8*a*, otherwise generally corresponding to blades 7 and 8 as above, are arranged in edgewise relation to the material through which they move, to provide an improved cutting or tearing action; and the leading edges of the blades may be sharpened as at 15.

Figs. 8, 9 and 10 show screens or grids employed in conjunction with any suitable rotor or impeller, such as one of the type previously referred to. Thus a screen or grid 20 is placed below and adjacent the lower edges of the centripetal arms or blades 3 of the rotor, the peripheral part of the grid plate being adjacent the inner edges of the main rotor blades 2. In order to avoid too great impedance of the general flow of material through the rotor the screen or grid 20 is preferably discontinuous; that is, it has large gaps or openings as at 21, and conveniently this formation is produced by making the grid in the form of arms or wings 22 extending from a central portion 23 and widely spaced to provide ample apertures for the general material flow into the central part of the rotor and out between the main blades 2. The grid is supported in any convenient way as by rods or struts 24 extending to walls of the tank in which the apparatus is located. Each of the grid walls or portions 22 is provided with a multiplicity of perforations or passages 25 inclined downward and forward in the general direction of material movement. As the lower edges of the rotor arms or blades 3 pass over the upper surface of the grid they tend to wipe or force material through perforations 25 with a shearing action which rapidly attenuates, tears or separates viscous material, breaks down and reduces the size of solids, and generally expedites mixing, dissolving or dispersing action.

I may also provide another screen or grid such as 30 in the form of an annular plate or ring surrounding and adjacent the outer edges of the main rotor blades 2. This screen has a vertical dimension less than the height of the rotor blades, so that the normal outflow from these blades is not entirely intercepted, but only a part of the discharge material is acted upon by the screen. This screen is supported by arms or struts 31, and is provided with apertures or perforations 32 inclined angularly outward and forward in the general direction of material flow as impelled by the main blades 2, the edges of which in cooperation with the grid have an action similar to that described with reference to screen 20 and arms 3, except that in this case the material is forced tangentially outward through the perforations 32. The described apparatus, namely the rotor or im-

peller with either or both of the screen or structures, may be employed with or without a stationary deflector surrounding the impeller, as and for purposes well understood in the art.

The impeller as used in cooperation with either or both of the screens or grids may be provided with any or all of the baffle blades such as 7, 8 or 9 referred to in connection with Figs. 1 and 2, or these may be omitted, as may be desired.

I claim:

1. In apparatus of the class described, in combination with a tank, and material circulating means therein, including a rotor, a multiplicity of relatively small baffle blades on portions thereof for rapid disintegration, dispersal or diffusion of circulated materials, the baffle blades being located on plates secured to the rotor.

2. In apparatus of the class described, in combination with a tank, and material circulating means therein, including a rotor, a multiplicity of relatively small baffle blades on portions thereof for rapid disintegration, dispersal or diffusion of circulated materials, the baffle blades being formed as integral parts cut and bent up on plates secured to portions of the rotor.

3. In mixing apparatus of the class described, in combination with a rotor or impeller having curved blades arranged to discharge material tangentially outward, a large number of baffle blades on outer surface portions thereof for rapid disintegration, dispersal or diffusion of circulated materials.

4. In apparatus of the class described, in combination with a rotor or impeller having means for producing material circulation, a large number of relatively small baffle blades on outer surface portions thereof for rapid disintegration, dispersal or diffusion of circulated materials.

5. In apparatus of the class described, in combination with a rotor or impeller having means for producing material circulation, a multiplicity of relatively small baffle blades on outer surface portions thereof for rapid disintegration, dispersal or diffusion of circulated materials, the baffle blades being formed on plates secured to the rotor.

6. In apparatus of the class described, in combination with a rotor or impeller having means for producing material circulation, a multiplicity of relatively small baffle blades on outer surface portions thereof for rapid disintegration, dispersal or diffusion of circulated materials, the baffle blades being formed as integral parts cut and bent up on plates secured to outer portions of the rotor.

7. In combination with a rotor or impeller including material-circulating blades, a large number of relatively small baffle blades secured to leading faces of the circulating blades.

8. In combination with a rotor or impeller including material-circulating blades, a large number of relatively small baffle blades secured to leading faces of the circulating blades, and projecting substantially perpendicularly to the main blade surfaces.

9. In apparatus of the class described, in combination with a tank, and material circulating means therein, a multiplicity of baffle blades on said circulating means for rapid disintegration, dispersal or diffusion of circulated materials, said baffle blades having angularly directed end portions.

10. In apparatus of the class described, in combination with a tank, and material circulating means therein, including a rotor, a multiplicity of relatively small baffle blades on portions thereof for rapid disintegration, dispersal or diffusion of circulated materials, said baffle blades having angularly directed, pointed teeth.

11. In an impeller including an annular plate and circulating blades thereon, a multiplicity of relatively small baffle blades secured to the outer surface of said plate.

12. In an impeller including an annular plate and circulating blades thereon, a multiplicity of relatively small baffle blades secured to the outer surface of said plate, and substantially similar baffle blades secured to a lower portion of the impeller.

13. In an impeller including an annular plate and circulating blades thereon, a multiplicity of relatively small baffle blades secured to the outer surface of said plate, and substantially similar baffle blades secured to a lower portion of the impeller, substantially in the plane of the lower edges of the circulating blades.

14. In mixing apparatus, the combination of a rotary impeller having spaced material circulating blades, curved and arranged angularly to axial planes, and having discharge edges substantially parallel to the axis of rotation, and a screen closely surrounding said blade discharge edges and of a width substantially less than that of the discharge area represented by the length of the adjacent blade edges, the blades acting to force material tangentially outward and through the screen apertures.

15. In combination with an impeller having substantially radial, angular blades, a grid or screen adjacent edges of the blades and having perforations inclined at an angle opposite to the blade inclination and located adjacent blade edges to cooperate with the blades in producing a shearing action on material propelled through the perforations.

16. In combination with an impeller having substantially radial, angular blades, a grid or screen adjacent edges of the blades and having perforations inclined at an angle

opposite to the blade inclination and located adjacent blade edges to cooperate with the blades in producing a shearing action on material propelled through the perforations, the grid or screen also having large apertures for general circulation of material through the impeller.

17. In combination with an impeller having blades for tangential propulsion of material, a grid surrounding the outer edges of said blades and having perforations inclined tangentially in the direction of material movement.

18. In combination with an impeller having blades for tangential propulsion of material, a grid surrounding the outer edges of said blades and having perforations inclined tangentially in the direction of material movement, and providing in conjunction with the blades a shearing action on the circulated material.

19. In mixing or analogous apparatus including a rotor having blades to produce a general circulation of material, a multiplicity of relatively small baffle blades on the impeller and a screen or grid adjacent the impeller and having perforations for passage therethrough of portions of the circulated material.

20. In mixing or analogous apparatus including a rotor having blades to produce a general circulation of material, a multiplicity of relatively small baffle blades on the impeller and a screen or grid adjacent the impeller and having perforations for passage therethrough of portions of the circulated material, and cooperating with the blades to secure passage of a part of the circulated material through the perforations.

21. In mixing or analogous apparatus including a rotor having blades to produce a general circulation of material, a multiplicity of relatively small baffle blades on the impeller and a screen or grid adjacent the impeller and having perforations for passage therethrough of portions of the circulated material, and cooperating with the blades with a shearing action.

In testimony whereof I affix my signature.

KENNETH S. VALENTINE.