March 27, 1956 R. E. SMITH 2,739,789

CHAIN BLOCK HOIST

Filed July 1, 1950 4 Sheets-Sheet 1

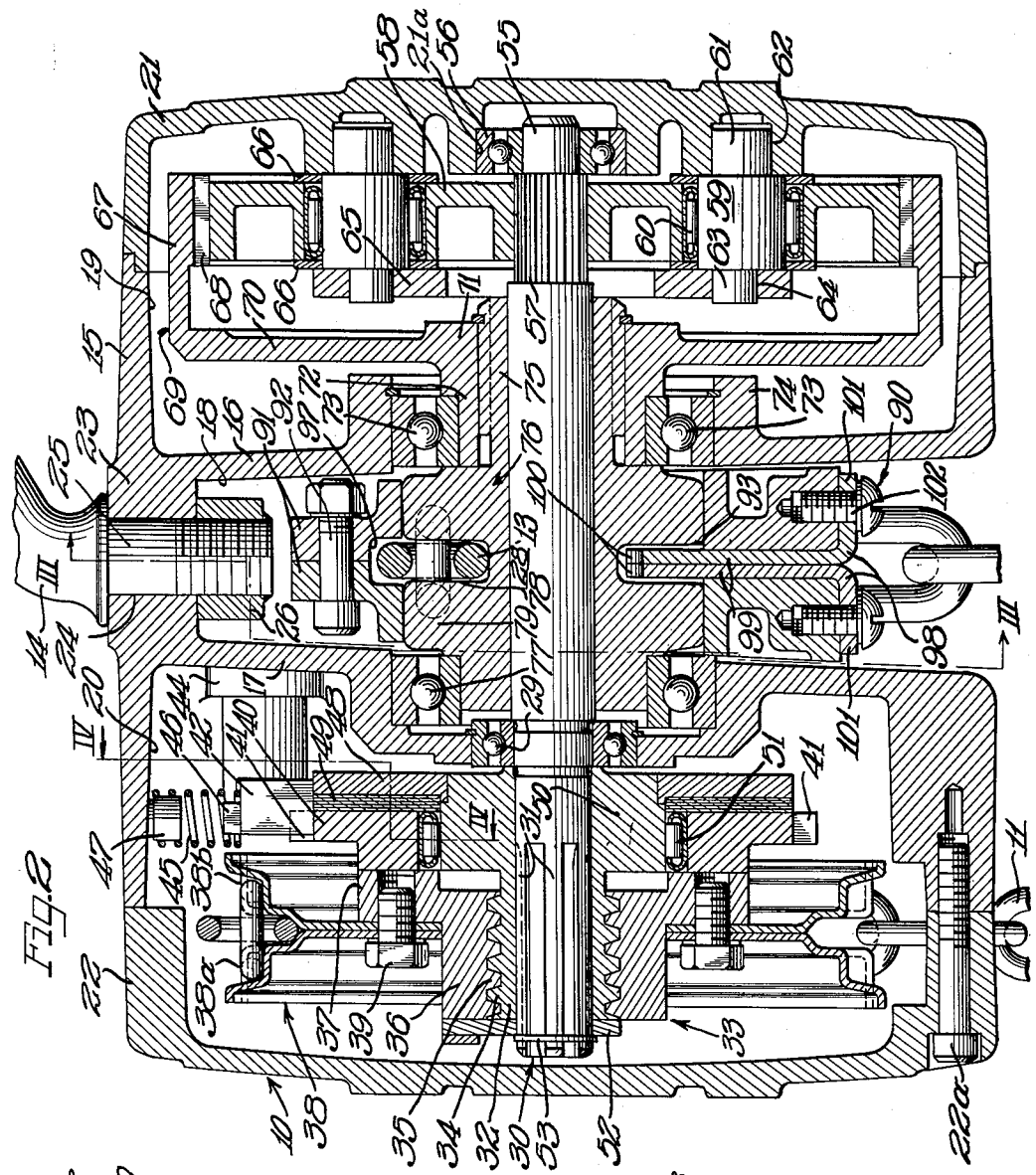

Fig. 2

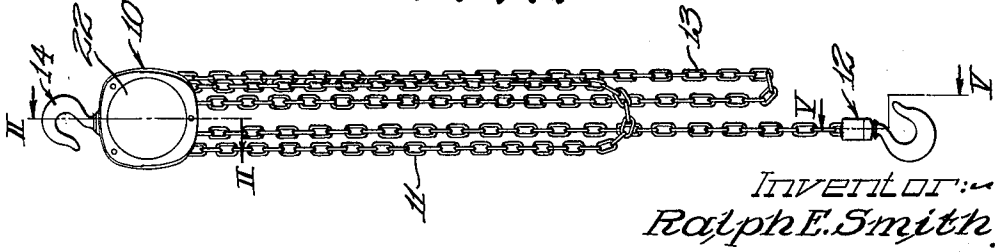

Fig. 1

Inventor:
Ralph E. Smith
By The Firm of Charles W. Hills
Attys

March 27, 1956 R. E. SMITH 2,739,789

CHAIN BLOCK HOIST

Filed July 1, 1950 4 Sheets-Sheet 2

Fig. 3

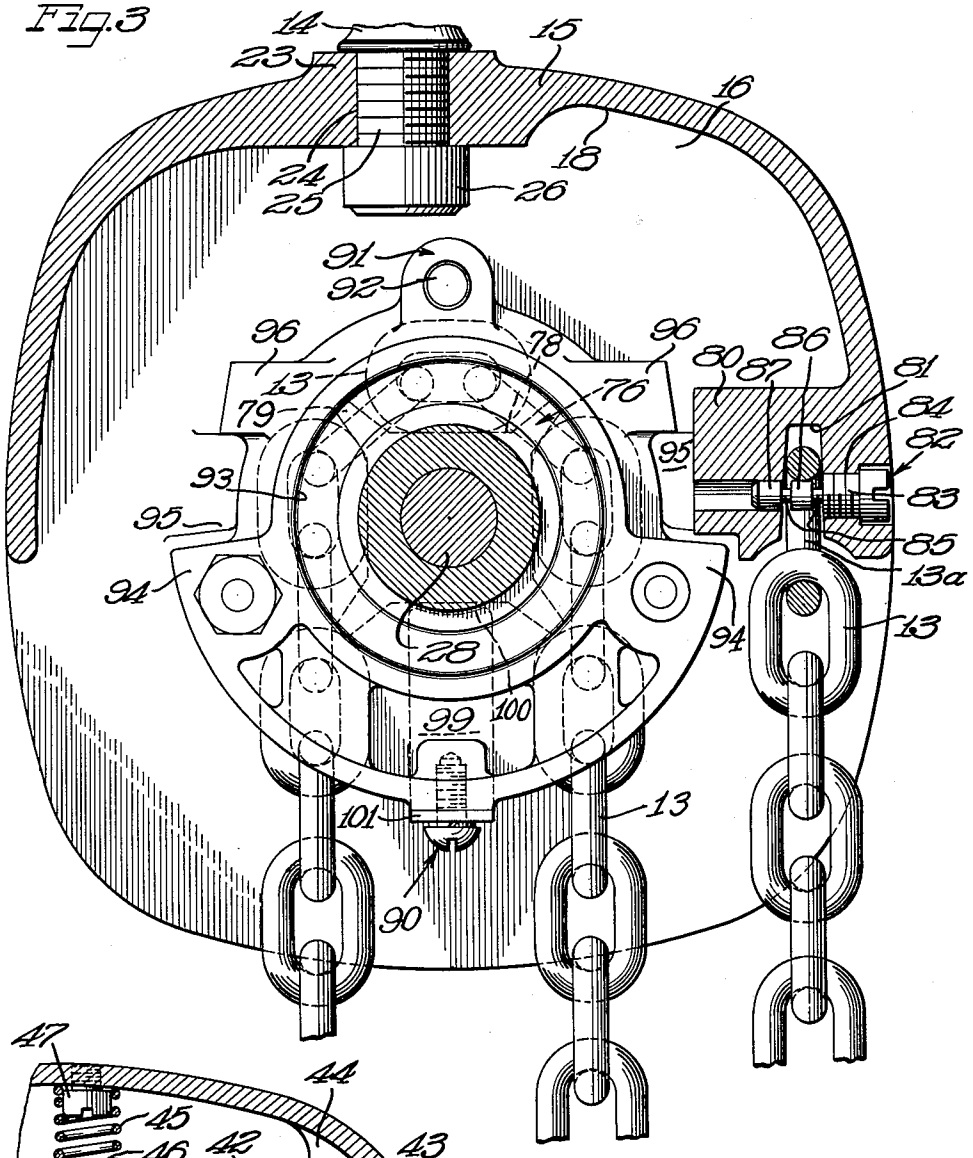

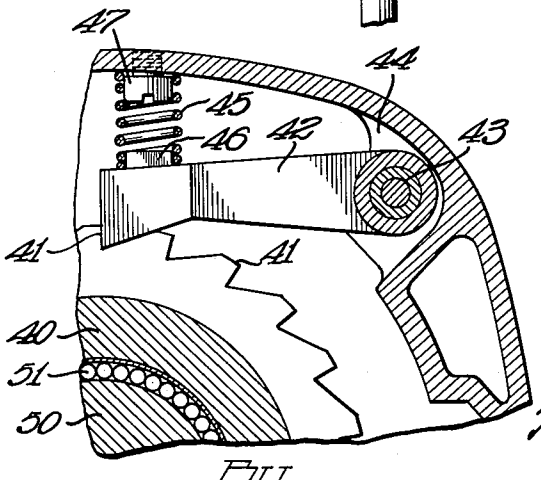

Fig. 4

Inventor:-
Ralph E. Smith
The Firm of Charles W. Hills
Attys

By

March 27, 1956 R. E. SMITH 2,739,789

CHAIN BLOCK HOIST

Filed July 1, 1950 4 Sheets-Sheet 3

Fig. 5

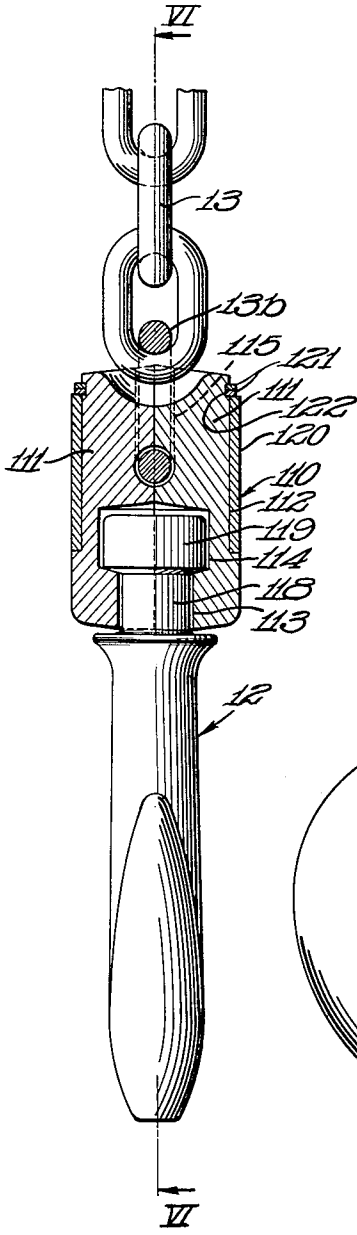

Fig. 6

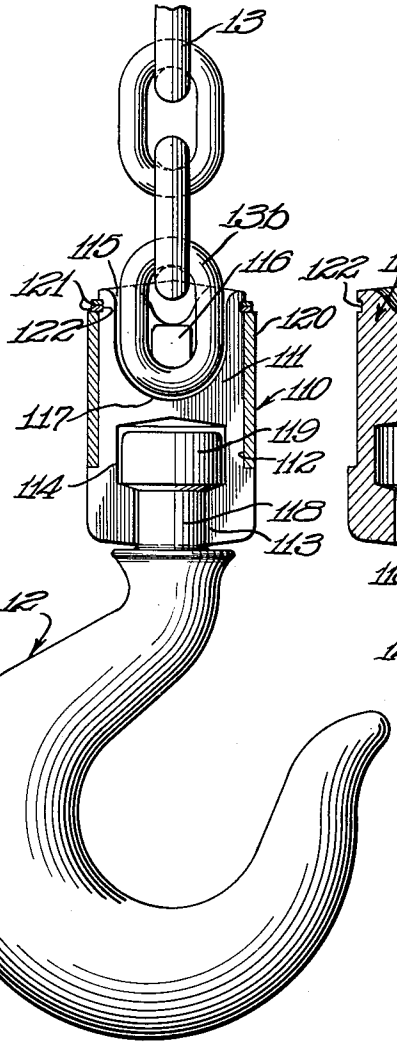

Fig. 7

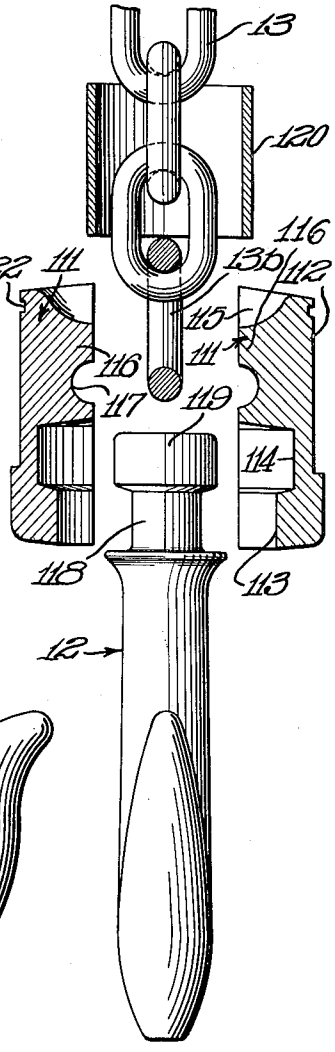

Inventor
Ralph E. Smith
The Firm of Charles W. Hill
By Attys

March 27, 1956 R. E. SMITH 2,739,789

CHAIN BLOCK HOIST

Filed July 1, 1950 4 Sheets-Sheet 4

Fig. 8

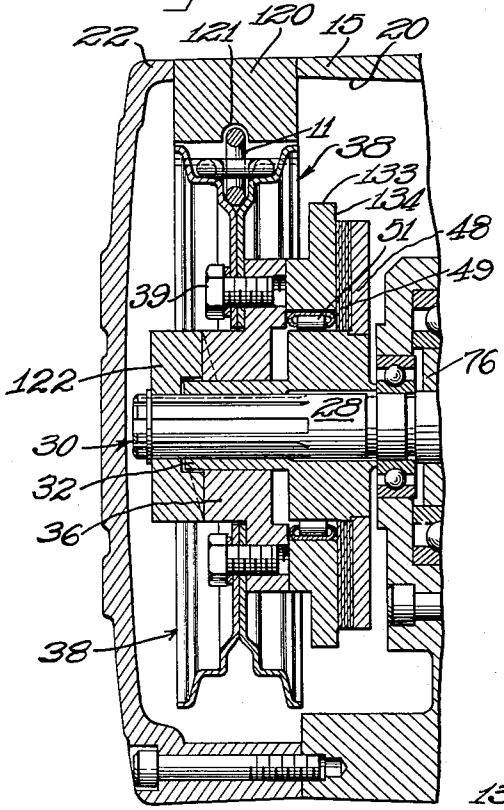

Fig. 9

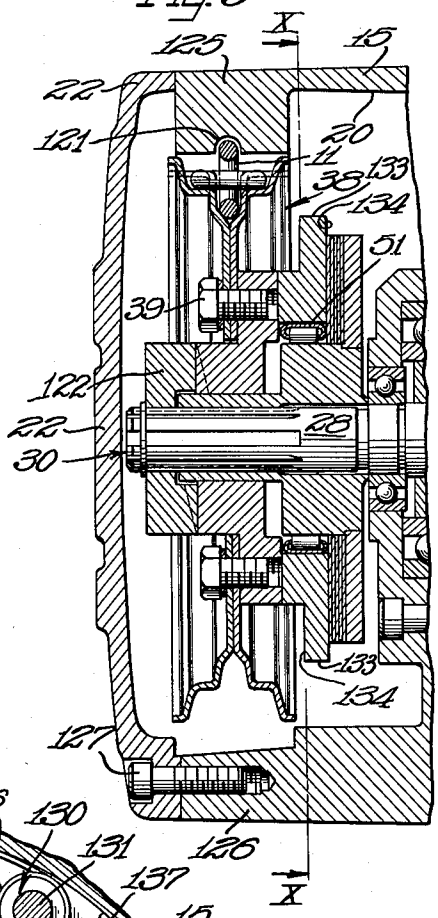

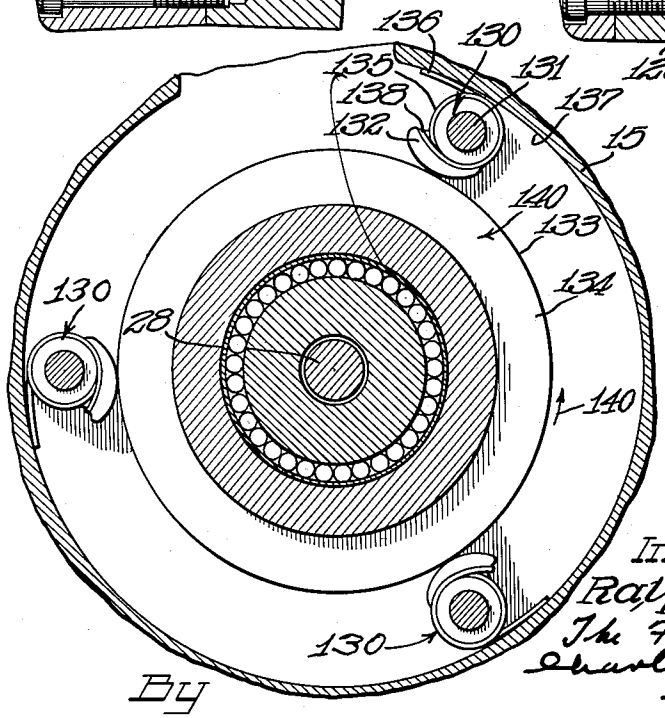

Fig. 10

Inventor:
Ralph E. Smith
The Firm of
Charles W. Hills
Attys

By

United States Patent Office 2,739,789 Patented Mar. 27, 1956

2,739,789

CHAIN BLOCK HOIST

Ralph E. Smith, Muskegon Heights, Mich., assignor to Manning, Maxwell & Moore, Inc., Muskegon, Mich., a corporation of New Jersey

Application July 1, 1950, Serial No. 171,603

3 Claims. (Cl. 254—171)

The present invention relates to a chain block hoist and more particularly to a hand actuatable, easily operable, compact chain hoist.

The chain block hoist of the present invention is of very compact design making possible the utilization of smaller overall dimensions than those hoists generally available at the present time. This compactness results from the employment of a unitary load and driving shaft which provides a very small driving pinion and which carries a relatively small load sprocket. All operating parts of the hoist are housed within a balanced frame construction which prevents exposure of the operating parts of the hoist to the elements, and/or to dirt, dust and other foreign matter in the environment in which the hoist is employed.

The closed and balanced frame construction of the hoist operating parts provide chain guides for both the hand chain and the load chain to prevent jamming or gagging of the chain, even if the hoist is utilized in a horizontal position. The present invention provides several different types of hand wheel guides each of which insures smooth, dirt-free hand wheel chain operation. The hoist is provided with a Weston-type load brake located at one extremity of the unitary shaft and with an idler and ring gear unit at the other end of the shaft in mesh with a pinion gear formed on the shaft itself and effective to drive a load sprocket located intermediate the load brake and the drive gearing and mounted concentrically on the shaft.

One feature of the present invention resides in the anti-friction mounting of the load brake ratchet, thereby permitting the load carried by the load chain sprocket to be lowered with less effort than is necessary with those devices now generally available. The anti-friction mounting of the ratchet may also be employed with a spring-urged cam block brake, as well as with a ratchet pawl-type brake.

Another feature of the present invention is the provision of the idler gears of the drive gearing with shafts which are journaled in the balanced frame. More particularly, this latter feature includes the provision of idler gear shafts carried by a frame end closure plate at one end and by an annular ring positioned within the closed frame and receiving the other end of the idler gear shafts. The idler gears themselves are mounted on the idler gear shafts for free rotation by means of anti-friction bearings to provide easily manually operable load hoisting and lowering operations.

An additional feature of the present invention is the utilization of a shear pin on the load chain itself to prevent damage to the hoist gearing upon the lowering of a load to the extreme position permitted by the length of the load chain.

A further feature of the present invention resides in the provision of an improved means for mounting a load hook on the load chain. This means includes a pair of separable chain hook blocks adapted to retain the butt end of a hook in a recess cooperatively defined by the

block sections and receiving the load chain terminal ends between a pair of pad-shaped lugs formed in the block sections. A simple cylindrical sleeve is employed to secure the separable block sections in cooperative relationship. This economical lower hook securing means effectively eliminates bending fatigue stresses at the point of hook attachment, which stresses have been a frequent cause of hook failure in the prior art.

It is, therefore, an important object of the present invention to provide an improved, compact chain block hoist having a balanced frame substantially enclosing all operable parts of the hoist.

Another important object of the present invention is to provide an improved chain block hoist having a unitary load shaft and drive shaft journaled within a substantially closed frame and provided with a Weston-type load brake having a load ratchet mounted on the shaft through an anti-friction bearing to facilitate work lowering operation of the hoist.

It is a further important object of the present invention to provide an improved chain block hoist operable through a gearing arrangement to elevate and lower a workpiece and provided with means actuatable upon the subjection of the gearing arrangement to a predetermined load to prevent damage to the gearing arrangement.

Still another important object of the present invention is to provide an improved chain block hoist having a manually operable load chain and a hook for securing a workpiece to the load chain, the hook being secured to the load chain through a separable hook block which is not subject to bending fatigue, even upon repeated use.

Yet another important object of the present invention is to provide a chain block hoist having a substantially closed frame journaling therein a unitary load shaft and driving shaft providing the driving pinion of an idler and ring gearing arrangement for driving a sprocket concentrically mounted on the shaft and provided with an improved load chain guide and stripper means.

Still a further important object of the present invention is to provide a chain block hoist having a balanced frame construction substantially enclosing all of the operating parts of the hoist and providing a hand chain guide for preventing jamming and gagging of the hand chain even during horizontal use of the hoist.

An additional object of the present invention is to provide a chain block hoist having a load brake utilizing spring-urged cam means for preventing slippage of a hoist load elevated by the hoist.

Other and further important objects of this invention will be apparent from the disclosures in the specification and the accompanying drawings.

On the drawings:

Figure 1 is a side elevational view of a chain block hoist of the present invention;

Figure 2 is a greatly enlarged sectional view, with parts shown in elevation, taken along the plane II—II of Fig. 1;

Figure 3 is a sectional view, with parts shown in elevation, taken along the plane III—III of Fig. 2;

Figure 4 is a fragmentary sectional view, with parts shown in elevation, taken along the plane IV—IV of Fig. 2;

Figure 5 is a greatly enlarged sectional view, with parts shown in elevation, taken along the plane V—V of Fig. 1;

Figure 6 is a sectional view, with parts shown in elevation, taken along the plane VI—VI of Fig. 5;

Figure 7 is an exploded sectional view similar to Fig. 5;

Figure 8 is a fragmentary sectional view, similar to Fig. 2, of a modified form of chain block hoist;

Figure 9 is a fragmentary sectional view, with parts

shown in elevation, similar to Fig. 8 showing another modified form of the invention; and

Figure 10 is a sectional view taken along the plane X—X of Fig. 9.

As shown on the drawings:

In Figure 1, reference numeral **10** refers generally to a chain block hoist of the present invention including a manually operable hand wheel chain **11** for elevating and lowering a workpiece (not shown) carried by a hook assembly **12** secured to a load chain **13**. The hoist **10** is adapted to be secured to a support member, such as an overhead beam, hook or the like, by an upper block hook **14**.

Frame structure

As best shown in Figures 2 and 3, the hoist **10** includes a central frame **15** which is generally cylindrical in outline and which is provided with a pair of radial complementary walls **16** and **17**, respectively, extending across the interior of the frame to divide the frame into a plurality of interior recesses including a central downwardly opening recess **18** and oppositely directed end recesses **19** and **20**, respectively. Each of the recesses is closed by an end cover plate **21** and **22**, respectively, secured thereto by suitable means, as by screws **22***a*. The end cover plates are of dished configuration for cooperation with the end recesses **19** and **20** to provide enlarged end chambers at each axial end of the frame **15**.

That portion of the frame **23** overlying the central recess **18** is apertured as at **24** to receive therethrough a threaded depending boss **25** formed integrally with the upper hook **14** and extending into the central recess **18** to threadedly receive thereon a nut **26**. The hook **14** is thus rotatably secured to the frame **15**.

The hoist is of single shaft design and a unitary load and driving shaft **28** is provided to project axially of the frame **15** through the recesses **18**, **19** and **20** and into closely spaced clearance relation with the end cover plates **21** and **22**. That end **30** of the shaft **28** projecting into the end recess **20** is journaled by suitable means, as by a ball bearing **29** carried by interior frame wall **17** at the center thereof.

Load brake structure

The free shaft end **30** extending into the recess **20** is provided with axially extending splines **31** mating with interior spline formed on a load brake hub **32** for a Weston-type load brake **33**.

The load brake hub **32** is provided with an exterior screw threaded periphery **34** extending axially of the brake **33** into threaded engagement with corresponding interior threads **35** formed in a chain wheel hub **36** which is provided with a rearward radially extending flange **37** providing a plane radially enlarged forward face against which a hand chain wheel **38** is secured by suitable means, as by screws **39** threadedly retained by corresponding apertures formed in the flange **37** and passing through registering apertures formed in the separable halves **38***a* and **38***b* of the hand chain wheel **38**. It will be appreciated that the hand chain wheel is provided with peripheral pockets and projections as is conventional in the art for receiving thereabout the hand wheel chain **11** adapted for manually energizing the chain block hoist.

That surface of the flange **37** opposing that receiving thereagainst the hand chain wheel **38** abuts a load brake ratchet **40** having peripheral ratchet teeth **41** formed thereabout and cooperating with a ratchet pawl **42** as best shown in Figure 4. The ratchet pawl **42** is pivoted at one end, as at **43**, to a pivot leg **44** formed integrally with the frame **15**. The free end of the ratchet pawl **42** is urged into engagement with the load brake ratchet teeth **41** by suitable means, as by a compression spring **45** confined between and guided by an embossment **46** on the ratchet pawl **42** and a screw **47** threadedly retained by the upper wall of the frame **15** in position to overlie the free end of the ratchet pawl.

The load brake ratchet **40** cooperates with a load brake flange **48** to confine therebetween a multi-layer friction facing **49**. The load brake flange **48** is secured to a radially enlarged embossment **50** formed on the load brake hub, and anti-friction means, such as a roller bearing **51**, is interposed between the load brake ratchet **40** and the hub embossment **50**. Thus the ratchet is carried by the hub with the bearing **51** accommodating free relative rotation therebetween upon the subjection of either of the members to a rotation-preventing load. It will be noted that the chain wheel hub **36** and the load brake hub **32** are capable of relative threaded axial movement, with the provision of a brake stop lug **52** retained at the terminal end **30** of the shaft **28** by means of a snap ring **53** preventing separation of these members from the shaft.

Load sprocket gearing

That end **55** of the shaft **28** opposing the end **30** and projecting into the recess **19** is journaled within an anti-friction bearing, such as roller bearing **56** having its outer race secured within a peripheral wall **21***a* formed in the end cover plate **21** and its inner race contacting the shaft **28** adjacent the extreme end thereof.

Immediately adjacent the shaft terminal end **55**, there is formed a peripheral gear or pinion surface **57** which is in mesh with a plurality of idler gears **58**. The idler gears **58** are mounted upon idler shafts **59** through the medium of anti-friction bearings, such as roller bearings **60**, accommodating free rotation of the gears **58** upon their shafts. Each idler gear shaft is provided with a central axial extension **61** seated within a corresponding recess **62** formed in the cover plate **21** while the opposing end of the idler gear shaft is provided with an eccentric axial extension **63** which is positioned within a corresponding aperture **64** formed in an annular ring **65** surrounding each of the extensions **63**. It will be seen that the relative eccentricity of the shaft extensions **61** and **63** prevents rotation of the shaft **59** with the idler gears **57**, thereby preventing any unwarranted bearing and/or shaft wear and loss of function. An annular idler shaft spacer washer **66** is interposed between the cover plate **21** and each gear **58** and between each gear **58** and the annular plate **65** to prevent axial play of the idler gears **58** while at the same time accommodating rotation thereof.

The idler gears **58** are enclosed by a ring gear **67**, having internal gear teeth **68** meshing with the idler gear teeth, thus forming a uniplanar pinion, ring and idler gearing assembly. Actually, the ring gear **67** is formed as an axial extension of a gear sprocket **69** having a radial web portion **70** joining the ring gear portion **67** to a hub portion **71** having an axial projection **72** journaled by suitable means, as by a ball bearing **73** in the frame wall **16**. The bearing **73** has its outer race contacting an extension **74** on the wall **16** concentric with and surrounding a corresponding portion of the shaft **28**, while the inner race of the bearings **73** is fitted onto the axial extension **72** of the sprocket gear. The sprocket gear extension **72** is provided with internal splines engaging corresponding external splines formed on an axial extension **75** of a load chain sprocket **76**.

The load chain sprocket **76** is axially apertured to receive the shaft **28** and is freely rotatable thereon. It will be seen that driving of the shaft **28** by means of the load brake assembly **33** hereinbefore described will drive the idler or planetary gears **58** from the pinion **57**. This driving of the idler gears in engagement with the sprocket gears **69** will cause a corresponding co-rotation of the load chain sprocket **76** upon the shaft **28**. The sprocket **76** is rotatably supported upon the shaft **28** for rotation relative thereto by means of the bearings **73** for the sprocket gear **69** hereinbefore described and by means of a second anti-friction bearing **77** having its outer race contacting the wall **17** and its inner race bearing against the load chain sprocket **76**.

The relatively small load chain sprocket **76** is provided

with peripheral radially inwardly extending recesses **78** for receiving the load chain **13** with sprocket projections **79** between the recesses **78** for positive interlocking engagement with the load chain.

Shear pin structure

The frame **15** is provided with a radially inwardly projecting boss **80** aligned with the sprocket **76** and having an open bottomed intermediate slot **81** therein, as best shown in Figure 3 of the drawings. The slot **81** is adapted to receive a terminal link **13***a* of the load chain **13** and a shear pin **82** is provided to extend transversely across the slot **81**. The shear pin **82** includes a screw head **83** provided with peripheral threads for engaging the corresponding aperture **84** formed in the frame **11** and the shank of the screw head **83** is provided with axially spaced reduced portions **85** on either side of an enlarged central portion **86** receiving the terminal link **13***a* thereabout. A terminal shank portion **87** is snugly received by a recess **88** formed in the boss **80** and communicating with the slot **81**.

It will be seen that if the load chain **13** were entirely extended and an additional load were placed thereon exceeding the shearing strength of the reduced portions **85** of the pin **82**, these portions would shear, thereby preventing damage to the gearing and/or remaining portions of the apparatus.

Load chain guide and stripper assembly

Also as seen in Figures 2 and 3, a combined load chain guide and stripper **90** is provided, the guide and stripper comprising complementary sections **91** secured together by suitable means, as by nuts and bolts **92** threaded through registering apertures formed in the sections. Each section **91** comprises a generally annular member having a central aperture **93** adapted to snugly receive the load chain sprocket therein.

The circumference of each of the sections **91** is provided with oppositely directed lugs **94** having plane upper surfaces adapted to abut the undersurfaces of corresponding lugs **95** projecting radially inwardly from the peripheral walls of the frame **15** (Figure 3). Each guide section **91** is also provided with additional radially projecting lugs **96** having lower surfaces for engaging the corresponding upper surfaces of the lugs **95**, so that the lugs **94**, **95** and **96** cooperate to position each section **91** of the chain guide **90** within the frame **15** and to retain the chain guide therein against rotative movement. The lugs **94** are spaced between the corresponding portions of the lugs **95** so that a limited amount of relative radial movement between the sections **91** and the frame is accommodated.

The cooperating sections **91** when secured together define an interior recess **97** aligned with the chain-receiving sockets **78** of the chain sprocket **76** to form a cover for the sockets **78** and to effectively guide the links of the chain load **13** therethrough.

Movement of the chain guide **90** axially of the shaft **28** is prevented by closely spaced relation of the lower portion of the chain guide **90** between the walls **16** and **17** of the frame **15** as illustrated in Figure 2. This lower portion of each chain guide section **91** carries a complementary chain stripper member **98** each having an upstanding web portion **99** closely confined between the complementary guide sections **91** and terminating in an upper arcuate surface **100** closely underlying the sockets **78** of the load chain sprocket **76**. Each chain stripper section **98** is provided with a lateral flange **101** which is secured to the lowermost portion of the corresponding chain guide section by suitable means, as by screws **102** threadedly retained by registering tapped holes in the chain guide sections **91**.

Load hook attachment assembly

In Figures 5–7, inclusive, there is illustrated the means for attaching the load hook **12** to the load chain **13**. The terminal link **13***b* at that end of the chain **13** opposite to the link **13***a* hangs freely from the load chain sprockets **76** hereinbefore described. The link **13***b* is positioned within a hook block assembly **110** including a pair of complementary hook blocks **111**. Each block **111** is of semi-cylindrical outline and is provided with an outer peripheral recess **112**, and a lower semi-cylindrical recess **113** extending through the bottom thereof and communicating with an upper interior radially enlarged recess **114**. The upper portion of each block is provided with an arcuate upwardly opening recess **115** adapted to receive a portion of the link **13***b* and having a central radially inwardly extending leg **116** cooperating with the recess **115** to define a lower arcuate aperture **117** having the same center of curvature and a slightly larger radius than that of the link **13***b*. As best shown in Figure 7, the hook **12** is provided with a reduced neck **118** joining the hook proper to an upper enlarged terminal boss **119**.

To assemble the hook **12** to the chain **13**, it is only necessary to position the chain and hook as shown in Figure 7 and to enclose the same with the blocks **111** with the hook boss **119** fitting within the recess **114** and the neck **118** projecting from the block through the joining aperture **113**. The terminal link **13***b* of the chain **13** is seated within the recess **115** with the extreme end of the link being positioned within the arcuate recess **117**. A generally cylindrical sleeve **120** is telescopically received by the block **111** to fit thereabout in the peripheral grooves **112**. A pair of snap or lack rings **121** are next positioned within a radially extending relatively short groove **122** to overlie the sleeve **120** and to retain the same in peripherally engaged position about the block **111**.

The inwardly extending abutting block lugs **116** cooperate to provide a pad snugly seatable within the terminal link **13***b*, and it will be seen that substantially no bending load is imposed upon the lugs due to their relatively short radial lengths and their snug fit about the chain links.

Those skilled in the art will also appreciate the possibility of economically manufacturing the means for securing the hook to the chain inasmuch as the separable block sections **111** may be made of a steel or similar forging, so that a very minimum amount of machining is necessary and the sleeve **120** is preferably formed of seamless steel tubing, so that a snug telescopic fit of the sleeve and separable sections is provided without the necessity of expensive machining or other finishing operations. The only force to which the blocks **111** are submitted is a shearing force of the lugs **116** and of the lower portion of the block underlying the hook boss **119**. These shearing forces may be easily borne by a steel forging or the like.

Operation

The operation of the hoist hereinbefore described will be readily appreciated by those skilled in the art. As hereinbefore described in connection with the load brake assembly **33**, movement of the hand chain **11** in a lifting direction will engage the load brake friction facings **49** between the ratchet **40** and the load brake flange **48** to drive the shaft **28** through the load brake hub **32** splined thereon. Rotation of the shaft **28** will be imparted through the pinion surface **57** to the idler gears **58** and then to the sprocket gear **69**. Inasmuch as the sprocket gear **69** is splined to the load chain sprocket **76**, rotation of the load sprocket within its journals **73** and **77** will be effected regardless of rotation of the shaft **28**.

The combined chain stripper and guide **90**, also hereinbefore described, fits very snugly about the load chain sprocket **76** to provide an effective chain guiding and stripping assembly, while at the same time the cooperating lugs **94**, **95** and **96** on the sections **91** and on the frame **15** retain the assembly **90** in desired position, while still accommodating pulling of the chain about the sprocket

in a direction inclined to the vertical. In addition, it will be noted that the end cover plate **22** closing the end recess **20** effectively serves as a chain guide for the hand chain **11** lapped about the hand chain wheel **38**. It will be noted that the cover plate **22** is secured to the frame by means of the screws **22***a* so as to be readily removable to permit inspection and/or repair of the hand chain, hand chain wheel, load brake or load brake ratchet, as may be desired. The other end cover plate **21** is likewise removably secured to the frame by suitable means, and the removal of this cover plate provides easy access to the entire gearing of the hoist without the necessity of disassembly of the sprocket and/or chain guide and stripper assembly. Further, the mounting of the idler gear shaft **61** on the end cover plate **21** prevents the necessity of providing separate mounting means for the idler gear shaft, while the mounting ring **65** receiving the eccentric idler shaft extensions **63** prevents rotation of the idler shaft while at the same time providing a simple, readily assembled means for securing the free ends of the idler shafts.

Although only a single bearing means is provided to directly journal the shaft within the frame, the sprockets within the frame, and the sprocket gear within the frame, respectively these three bearing means are interrelated and co-supporting so that both the shaft and the sprocket are effectively supported at axially spaced points within the frame in direct load-bearing relation thereto. In addition, it will be seen that a counterbalanced frame construction is provided by the mounting of the load brake assembly and the gearing assembly on opposing sides of the central recess, while the load chain is directly aligned vertically with the hook **14**, so as to be in direct load bearing relation thereto.

When it is desired to lower a workpiece supported by the load bearing chain **13**, it is only necessary to reverse the direction of rotation of the hand chain wheel by proper manipulation of the hand chain **11**. This movement, of course, will attempt to reverse the direction of movement of the load chain ratchet, which movement is prevented by the ratchet pawl **42** in contact therewith. The supported load itself will tend to turn the brake through the medium of the flange **48**, but this movement will merely force the load brake hub flange **48** into tighter engagement with the friction facings **49**, thereby preventing accidental slippage of the load.

To lower the load, upon the reversal of direction of movement of the hand chain wheel from a lifting direction, this effort will be applied to the hub **35** to back the hub away from the stationary ratchet **40**, thereby releasing the load and allowing the same to descend. Thus, although the ratchet is held in position, the hub **32** is rotated relative thereto and this rotation is facilitated by the anti-friction bearings **51** interposed therebetween, thus reducing the lowering effort heretofore necessary which, in the absence of the anti-friction bearings, must overcome surface friction between the ratchet **40** and the hub **32**.

The modified form of Figure 8

In the modified form of chain block hoist shown in Figure 8 of the drawings, identical reference numerals of this figure refer to identical portions of the apparatus, and it will be seen that the main difference resides in the provision of a more shallow end recess **20** in the frame **15** and the interposing of an arcuate hand chain guide block **120** between the frame **15** and the end cover plate **22**. The hand chain guide block **120** extends axially of the shaft **28** through a distance substantially equal to the axial length of the hand chain wheel **38** and the guide block **120** extends into closely spaced radially aligned relation with the hand chain wheel. The block is radially recessed, as at **121**, intermediate its length to accommodate upstanding lengths of chain lapped about the hand chain wheel, to thereby permit closer chain guiding relation between the guide and the wheel.

It will also be noted that the load brake of Figure 8 has been slightly modified to illustrate the utility of a cam-block type brake with the present invention. The concentric hubs **32** and **36** are not threaded in this form, but an enlarged end cap **122** is provided to abut the axial end of the hub **36**, and the abutting faces of these members are provided with mating cooperable cam surfaces for effecting axial movement of the hub **36** and ratchet flange, as is well known in the art.

The modified form of Figures 9 and 10

In Figures 9 and 10 of the drawings, still another form of hand chain guide is illustrated. In this form of the invention, the frame **15** is provided with an axial extension **125** of substantially the same contour as the guide **120** hereinbefore described in connection with Figure 8 of the drawings. It will also be noted that the lower portion of the frame is provided with an axial extension **126** adapted to receive a fastening means, such as a screw **127**, passing through the end cover plate **22** and threadedly retained by the frame extension portion **126**. The load brake of this form of the invention is substantially the same as above described in connection with Figure 8.

In Figure 10 there is illustrated a different form of ratchet means for preventing rotation of the load brake under a gravitational load imparted to the load chain. The means takes the form of a plurality of cam blocks **130** pivotally mounted on supporting bosses **131**, carried by an adjacent portion of the frame **15** and extending inwardly of the frame in a plane parallel to the axis of rotation of the shaft **28**. The cam blocks **130** are each provided with a bottom arcuate cam shoe **132** which extends into surface contact with the smooth circular periphery **133** of a ratchet flange **134**, substantially the same as the load brake ratchet **40** hereinbefore described in connection with the embodiment of Figures 1–7, but in which the ratchet teeth **42** have been eliminated.

A coiled torsion spring **135** serves to urge the cam shoe **132** of each of the cams **130** against the periphery **133** of the ratchet flange **134**. One end **136** of the spring **135** contacts the inner periphery **137** of the frame **15**, while the other end **138** of the spring engages a portion of the cam shoe itself.

It will be seen that when the ratchet flange **134** is moved in a counterclockwise direction, as indicated by a directional arrow **140**, free rotation of the ratchet is accommodated by the cam shoes **132** slipping over the surface of the surface **133**. However, upon rotation in the opposite direction of the flange **134**, the cam shoes **132** are urged into biting contact with the periphery **133** of the flange to prevent rotation thereof. It will be readily appreciated by those skilled in the art that lifting movement of the hand wheel chain **11** causes rotation of the flange **134** in a counterclockwise direction, which rotation is accommodated by the cam shoes as hereinbefore described, while attempted rotation in a clockwise direction under a load is prevented by engagement of the cam shoes **132** with the periphery **133**.

It will be understood that modifications and variations may be effected without departing from the scope of the novel concepts of the present invention.

I claim as my invention:

1. In a chain block hoist having a frame provided with an interior wall defining an open ended chamber, a cover plate for closing said open ended chamber, a shaft journaled by said frame and said cover plate for rotation, a pinion on said shaft, a plurality of idler gear shafts each having a first axial extension retained by said cover plate and an oppositely directed second axial extension eccentric with respect to said first extension, an apertured ring receiving said second axial extensions, said cover plate and said ring supporting said shafts in radially spaced relation to said pinion, a plurality of idler gears

mounted on said idler gear shafts, anti-friction means interposed between each of said idler gears and the corresponding idler gear shaft, a drive sprocket having internal gear teeth meshing with said idler gears, and a sprocket journaled in said frame and adapted to be driven for rotation by said gear sprocket.

2. In a chain block hoist having a frame defining an open ended chamber, a driving shaft journaled by said frame and carrying a pinion thereon in said chamber, and a sprocket also journaled by said frame, a cover plate closing said chamber, a plurality of idler gear shafts each having oppositely directed relatively eccentric axial extensions, one of which is supported by said cover plate and the other of which projects into the interior of said chamber, means retaining said other extensions to prevent rotation of said shafts, a plurality of idler gears meshing with said pinion and each supported by one of said shafts, and a ring gear in mesh with said idler gears and drivingly connected to said sprocket.

3. In a chain block hoist, a driving shaft, a uniplanar pinion-ring-and-idler gearing assembly located at one end of said shaft for actuation thereby comprising a driving pinion on said shaft, a plurality of uniplanar idler gears displaced radially of said shaft and in mesh with said pinion, and a ring gear meshing with said idler gears and having an axially extending boss drivingly connected to a load sprocket; and means for rotating said shaft comprising a hub mounted on said shaft for rotation therewith and having a flange projecting radially therebeyond, a ratchet concentric with said hub and axially spaced from said flange, a hand chain wheel adapted for manual

rotation and for axial sliding movement, said hand chain wheel abutting said ratchet for effecting axial movement thereof toward and away from said hub flange so as to changeably cause co-rotation and free relative rotation of said wheel and said ratchet, means for preventing rotation of said ratchet in one direction, and anti-friction means interposed between said ratchet and said hub for accommodating free rotation of said hub relative to said ratchet in that direction in which rotation of said ratchet is prevented.

References Cited in the file of this patent

UNITED STATES PATENTS

609,939	Kincaid	Aug. 30, 1898
917,965	Regan	Apr. 13, 1909
1,572,001	Dotzert	Feb. 9, 1926
1,576,986	Mullen	Mar. 16, 1926
1,903,218	Knight	Mar. 28, 1933
1,913,861	Stahl	June 13, 1933
1,919,754	Sejersen	July 25, 1933
2,231,416	Stahl	Feb. 11, 1941
2,324,000	Johnston	July 13, 1943
2,325,917	Parker et al.	Aug. 3, 1943
2,375,719	Wirkkala	May 8, 1945
2,453,581	Moore	Nov. 9, 1948
2,493,727	Parker et al.	Jan. 3, 1950
2,623,731	Kamlukin	Dec. 30, 1952

FOREIGN PATENTS

992,778	France	July 11, 1951