Innovation, Sciences et Développement économique Canada
Office de la Propriété Intellectuelle du Canada

Innovation, Science and Economic Development Canada
Canadian Intellectual Property Office

CA 2814477 C 2020/12/22

(11)(21) 2 814 477

(12) BREVET CANADIEN
CANADIAN PATENT

(13) C

(86) Date de dépôt PCT/PCT Filing Date: 2011/10/13
(87) Date publication PCT/PCT Publication Date: 2012/04/19
(45) Date de délivrance/Issue Date: 2020/12/22
(85) Entrée phase nationale/National Entry: 2013/04/11
(86) N° demande PCT/PCT Application No.: US 2011/001761
(87) N° publication PCT/PCT Publication No.: 2012/050619
(30) Priorité/Priority: 2010/10/14 (US12/925,231)

(51) Cl.Int./Int.Cl. *A61N 1/36* (2006.01), *A61N 1/05* (2006.01), *A61N 1/37* (2006.01)

(72) Inventeur/Inventor:
WOLF, ERICH W., II, US

(73) Propriétaire/Owner:
WAVEGATE CORPORATION, US

(74) Agent: MARKS & CLERK

(54) Titre : APPAREIL ET PROCEDE FAISANT INTERVENIR LA REFLECTOMETRIE PROCHE INFRAROUGE POUR REDUIRE L'EFFET DES CHANGEMENTS DE POSITION PENDANT LA STIMULATION DE LA MOELLE EPINIERE

(54) Title: APPARATUS AND METHOD USING NEAR INFRARED REFLECTOMETRY TO REDUCE THE EFFECT OF POSITIONAL CHANGES DURING SPINAL CORD STIMULATION

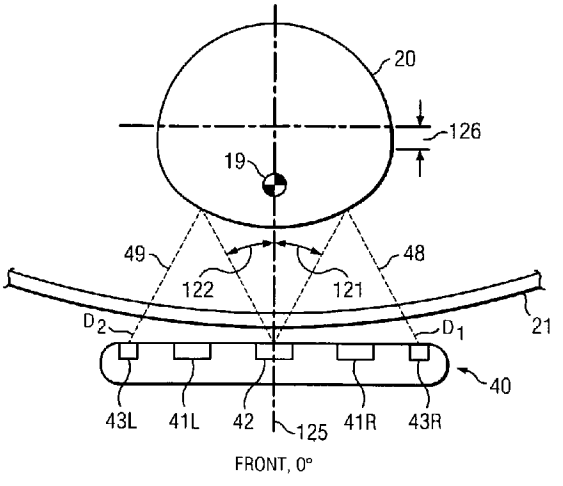

(57) Abrégé/Abstract:
A spinal cord stimulation apparatus and method for automatic adjustments of SCS using near-infrared (NIR) reflectometry are provided. A positionally sensitive system for spinal cord stimulation including an electrode assembly with integrated optical components for sensing spinal cord position relative to a stimulating electrode array and an SCS controller for controlling electrode stimulation parameters is provided. The integrated optical components include an IR emitter and a pair of IR photodetectors. As light from the IR emitter reflects from the spinal cord, it is detected by each of the pair of IR photodetectors. As the spinal cord changes position so do the angles of incidence for detected light from the IR emitter, a ratio of optical intensities in combination with a total optical intensity is measured and used to interpolate a set of electrode stimulation settings from a calibration table. Electrode pulse characteristics are adjusted in real time to minimize changes in stimulation perceived by the patient during motion.

(12) INTERNATIONAL APPLICATION PUBLISHED UNDER THE PATENT COOPERATION TREATY (PCT)

(19) World Intellectual Property Organization
International Bureau

(43) International Publication Date
19 April 2012 (19.04.2012)

PCT

(10) International Publication Number
WO 2012/050619 A1

(51) International Patent Classification:
A61N 1/00 (2006.01)

(21) International Application Number:
PCT/US2011/001761

(22) International Filing Date:
13 October 2011 (13.10.2011)

(25) Filing Language: English

(26) Publication Language: English

(30) Priority Data:
12/925,231 14 October 2010 (14.10.2010) US

(72) Inventor; and
(71) Applicant : **WOLF, Erich, W.** [US/US]; 1508 West Dumbarton, Lake Charles, LA 70605 (US).

(74) Agent: **SCHULTZ, George, R.**; Schultz & Associates, P.C., 5400 LBJ Freeway, Suite 1200, Dallas, TX 75240 (US).

(81) Designated States *(unless otherwise indicated, for every kind of national protection available)*: AE, AG, AL, AM, AO, AT, AU, AZ, BA, BB, BG, BH, BR, BW, BY, BZ, CA, CH, CL, CN, CO, CR, CU, CZ, DE, DK, DM, DO, DZ, EC, EE, EG, ES, FI, GB, GD, GE, GH, GM, GT, HN, HR, HU, ID, IL, IN, IS, JP, KE, KG, KM, KN, KP, KR, KZ, LA, LC, LK, LR, LS, LT, LU, LY, MA, MD, ME, MG, MK, MN, MW, MX, MY, MZ, NA, NG, NI, NO, NZ, OM, PE, PG, PH, PL, PT, QA, RO, RS, RU, RW, SC, SD, SE, SG, SK, SL, SM, ST, SV, SY, TH, TJ, TM, TN, TR, TT, TZ, UA, UG, US, UZ, VC, VN, ZA, ZM, ZW.

(84) Designated States *(unless otherwise indicated, for every kind of regional protection available)*: ARIPO (BW, GH, GM, KE, LR, LS, MW, MZ, NA, RW, SD, SL, SZ, TZ, UG, ZM, ZW), Eurasian (AM, AZ, BY, KG, KZ, MD, RU, TJ, TM), European (AL, AT, BE, BG, CH, CY, CZ, DE, DK, EE, ES, FI, FR, GB, GR, HR, HU, IE, IS, IT, LT, LU, LV, MC, MK, MT, NL, NO, PL, PT, RO, RS, SE, SI, SK, SM, TR), OAPI (BF, BJ, CF, CG, CI, CM, GA, GN, GQ, GW, ML, MR, NE, SN, TD, TG).

Published:

— *with international search report (Art. 21(3))*

(54) **Title**: APPARATUS AND METHOD USING NEAR INFRARED REFLECTOMETRY TO REDUCE THE EFFECT OF POSITIONAL CHANGES DURING SPINAL CORD STIMULATION

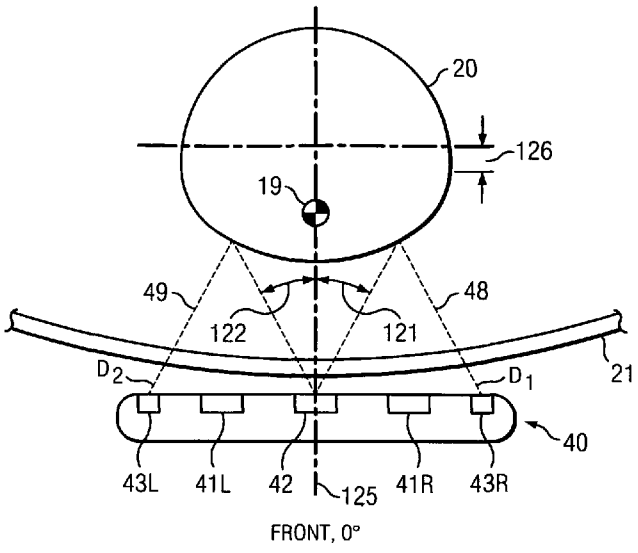

FIG. 6a

(57) **Abstract**: A spinal cord stimulation apparatus and method for automatic adjustments of SCS using near-infrared (NIR) reflectometry are provided. A positionally sensitive system for spinal cord stimulation including an electrode assembly with integrated optical components for sensing spinal cord position relative to a stimulating electrode array and an SCS controller for controlling electrode stimulation parameters is provided. The integrated optical components include an IR emitter and a pair of IR photodetectors. As light from the IR emitter reflects from the spinal cord, it is detected by each of the pair of IR photodetectors. As the spinal cord changes position so do the angles of incidence for detected light from the IR emitter, a ratio of optical intensities in combination with a total optical intensity is measured and used to interpolate a set of electrode stimulation settings from a calibration table. Electrode pulse characteristics are adjusted in real time to minimize changes in stimulation perceived by the patient during motion.

WO 2012/050619 A1

APPARATUS AND METHOD USING NEAR INFRARED REFLECTOMETRY TO REDUCE THE EFFECT OF POSITIONAL CHANGES DURING SPINAL CORD STIMULATION

FIELD OF INVENTION

[0002] This invention relates generally to spinal cord stimulation (SCS) and technique for automatic adjustments of SCS using near-infrared (NIR) reflectometry.

BACKGROUND

[0003] Spinal cord stimulation is a technique which uses an implanted electrode array to control chronic pain. The electrode array is typically implanted in a fixed position within the epidural space near the spinal cord. A signal generator delivers current pulses to the spinal cord via the implanted electrode array. The current pulses induce parasthesiae which help block the perception of pain.

[0004] In Figure 1, spinal column **1** is shown to have a number of vertebrae, categorized into four sections or types: lumbar vertebrae **2**, thoracic vertebrae **3**, cervical vertebrae **4** and sacral vertebrae **5**. Cervical vertebrae **4** include the 1st cervical vertebra (C1) through the 7th cervical vertebra (C7). Just below the 7th cervical vertebra is the first of twelve thoracic vertebrae **3** including the 1st thoracic vertebra (T1) through the 12th thoracic vertebra (T12). Just below the 12th thoracic vertebrae **3**, are five lumbar vertebrae **2** including the 1st lumbar vertebra (L1) through the 5th lumbar vertebra (L5), the 5th lumbar vertebra being

attached to sacral vertebrae **5** (S1 to S5), sacral vertebrae **5** being naturally fused together in the adult.

[0005] In Figure 2, representative thoracic vertebra **10** is shown to have a number of notable features which are in general shared with lumbar vertebrae **2** and cervical vertebrae **4**. The thick oval segment of bone forming the anterior aspect of vertebra **10** is vertebral body **12**. Vertebral body **12** is attached to bony vertebral arch **13** through which spinal nerves **19** run. Vertebral arch **13**, forming the posterior of vertebra **10**, is comprised of two pedicles **14**, which are short stout processes that extend from the sides of vertebral body **12** and bilateral laminae **15**. The broad flat plates that project from pedicles **14** and join in a triangle to form a hollow archway, spinal canal **16**. Spinous process **17** protrudes from the junction of bilateral laminae **15**. Transverse processes **18** project from the junction of pedicles **14** and bilateral laminae **15**. The structures of the vertebral arch protect spinal cord **20** and spinal nerves **19** that run through the spinal canal.

[0006] Surrounding spinal cord **20** is dura **21** that contains cerebrospinal fluid (CSF) **22**. Epidural space **24** is the outermost part of the spinal canal. It is the space within the spinal canal formed by the surrounding vertebrae lying outside the dura.

[0007] Referring to Figures 1, 2 and 3, the placement of an electrode array for spinal cord stimulation according to the prior art is shown. Electrode array **30** is positioned in epidural space **24** between dura **21** and the walls of spinal canal **16** towards the dorsal aspect of the spinal canal nearest bilateral laminae **15** and spinous process **17**.

[0008] Figure 4 shows a prior art electrode array **30** including a set of electrode contacts **35** sealed into elastomeric housing **36**. Electrode array **30** has a set of electrode leads **31** which are connected to electrical pulse generator **32**. The electrical pulse generator may be

outside of the body or it may be implanted subcutaneously. Each electrode contact has a separate electrical conductor in the set of electrode leads **31** so that the current to each contact may be independently conducted and controlled.

[0009] The anatomical distribution of parasthesiae is dependent upon the spatial relationship between a stimulating electric field generated by the electrode array and the neuronal pathways within the spinal cord. The distribution may be changed by altering the current across one or more electrodes of the electrode array. Changing anode and cathode configurations of the electrode array also alters the distribution and hence, the anatomical pattern of the induced parasthesiae.

[0010] Proper intensity of the current pulses is important. Excessive current produces an uncomfortable sensation. Insufficient current produces inadequate pain relief. Body motion, particularly bending and twisting, causes undesired and uncomfortable changes in stimulation due to motion of the spinal cord relative to the implanted electrode array.

[0011] There are methods and systems for controlling implanted devices within the human body. For example, *Ecker et al*, in *U.S. Patent Application No. 2010/0105997*, discloses an implantable medical device that includes a controller and a plurality of sensor modules. A sensor includes at least one light source that emits light at a particular wavelength, which scatters through blood-perfused tissue a detector senses the light reflected by blood mass of a patient.

[0012] U.S. Patent No. 7,684,869 to *Bradley, et al.* discloses a system using an interelectrode impedance to determine the relative orientation of a lead other leads in the spinal column. *Bradley et al.* further disclose that interelectrode impedance may be used to adjust stimulation energy.

[0013] U.S. Patent Application No. 2009/0118787 to *Moffitt, et al.* discloses electrical

energy conveyed between electrodes to create a stimulation region. Physiological information from the patient is acquired and analyzed to locate a locus of the stimulation region. The stimulation region is electronically displaced.

[0014] Deficiencies exist in the prior art related to accuracy of spinal cord stimulation in relieving pain under changing circumstances. The deficiencies are most pronounced while the patient is moving. The prior art does not provide a satisfactory way to automatically adjust spinal cord stimulation to compensate for motion between the electrodes and the spinal cord to maintain a constant level of pain relief during patient motion.

SUMMARY OF PREFERRED EMBODIMENTS

[0015] Embodiments of the present invention operate to automatically adjust spinal cord stimulation to compensate for patient movement. Automatic adjustment results in consistent parasthesiae and conservation of battery power.

[0016] A preferred embodiment includes an electrode array incorporating a centrally positioned infrared (IR) emitter bracketed by a set of electrodes. Adjacent the electrodes are a pair of photodetectors. The IR emitter and photodetectors are positioned facing the spinal cord. Light emitted from the IR emitter is reflected from the spinal cord and detected by the photodetectors. The first photodetector detects light at a first angle as measured from an optical axis of the IR emitter and generates a first current signal. The second photodetector detects light at a second angle as measured from the optical axis of the IR emitter and generates a second current signal. The detected current signals are used to vary the stimulation current delivered to the electrodes based on a calibration table. The varying current adjusts the induced electric field of each electrode to compensate for changes in the position of the spinal cord to achieve a constant electric field.

[0017] A method for calibration is also provided that creates the calibration table. The calibration table is used to store optimal current settings for the electrodes for several known physiological positions of the patient.

[0018] In another embodiment, provisions are made for remotely controlled operation of the stimulator. In this embodiment, a communications link is established between a remote calibration computer and the spinal cord stimulator to upload and download data.

According to an aspect of the present invention, there is provided an apparatus for controlling spinal cord stimulation to a patient comprising:

a first array of electrodes embedded in a flexible substrate;

a second array of electrodes embedded in the flexible substrate;

the first array of electrodes and the second array of electrodes arranged in laterally opposed to positions;

a set of photoemitters embedded in the flexible substrate;

a first set of photodetectors embedded in the flexible substrate;

a second set of photodetectors embedded in the flexible substrate;

a signal processing unit comprising:

a central processing unit and memory,

a pulse generator, in communication with the central processing unit, connected to the first and second array of electrodes, and

an optical signal processor, in communication with the central processing unit, connected to the set of photoemitters, the first set of photodetectors and the second set of photodetectors;

a stimulation controller in communication with the signal processing unit and programmed to control the operation of the signal processing unit;

the flexible substrate configured to be implanted in the epidural space adjacent to the spinal cord of the patient and positioned such that light emitted from the set of photoemitters is reflected from the spinal cord of the patient into the first and second set of photodetectors;

wherein the signal processing unit is further programmed to carry out the steps of:

measuring a first photodetector value for a photodetector in the first set of photodetectors;

measuring a second photodetector value for a photodetector in the second set of photodetectors;

determining a position of the spinal cord based on the first photodetector value and the second photodetector value;

determining a group of electrode settings for at least one electrode in the first array of electrodes and at least one electrode in the second array of electrodes based

on the position of the spinal cord;

adjusting the pulse generator based on the group of electrode settings; and,

initiating an electric pulse according to the group of electrode settings to provide spinal cord stimulation.

According to another aspect of the present invention, there is provided a method of generating a command for controlling electrical stimulation with a stimulator configured to be implanted into an epidural space adjacent a spinal cord, the stimulator having a first array of electrodes in a first column, a second array of electrodes in a second column, a set of photoemitters in a third column, a first set of photodetectors in a fourth column, a second set of photodetectors in a fifth column, the method comprising:

configuring a connection of an electrical pulse generator to the first and second arrays of electrodes;

configuring a connection of an optical signal processor to the first and second sets of photodetectors;

configuring a connection of the optical signal processor to the set of photoemitters;

configuring control, by a central processing unit, of the electrical pulse generator and the optical signal processor;

configuring the central processing unit to be able to direct the set of photoemitters, with the optical signal processor, to send a set of light beams to the spinal cord of the patient;

configuring a first photodetector in the first set of photodetectors to be able to receive a first reflection of the light from at least one light beam in the set of light beams;

configuring a second photodetector in the second set of photodetectors to be able to receive a second reflection of the light from the at least one light beam in the set of light beams;

configuring the central processing unit to measure a first detected light value from the first photodetector;

configuring the central processing unit to measure a second detected light value from the second photodetector;

configuring the central processing unit to determine a position of the spinal cord based on the first detected light value and the second detected light value;

configuring the central processing unit to determine a group of electrode settings for at least one electrode in the first array of electrodes based on the position of the spinal cord and at least one electrode in the second array of electrodes based on the position of the spinal cord; and,

configuring the central processing unit to be able to output a first command indicating a first set of current pulses to be sent to the first array of electrodes and the second array of electrodes, from the electrical pulse generator, based on the group of electrode settings to effect electrical spinal cord stimulation.

According to a further aspect of the present invention, there is provided an apparatus for controlling spinal cord stimulation to a patient comprising:

a first array of electrodes embedded in an elastomer substrate and arranged in a first column;

a second array of electrodes embedded in the elastomer substrate arranged in a second column;

a first set of optical fibers embedded in the elastomer substrate and arranged in a third column;

a second set of optical fibers embedded in the elastomer substrate arranged in a fourth column;

a third set of optical fibers embedded in the elastomer substrate arranged in a fifth column;

a signal processing unit comprising:

a central processing unit and memory;

a pulse generator, in communication with the central processing unit, connected to the first and second arrays of electrodes;

an IR emitter optically, connected to the first set of optical fibers, to insert light into the first set of optical fibers; and

an optical signal processor, in communication with the central processing unit, connected to a photodetector array;

the photodetector array, optically connected to the second and third sets of optical fibers;

a stimulation controller, in communication with the signal processing unit and programmed to control the operation of the signal processing unit;

the elastomer substrate configured to be implanted in the epidural space adjacent to the spinal cord of the patient and positioned such that light emitted by the first set of optical fibers is reflected from the spinal cord of the patient into at least one optical fiber included in the second set of optical fibers and the third set of optical fibers;

wherein the signal processing unit is further programmed to carry out the operations of:

measuring a first photodetector value from the photodetector array;

measuring a second photodetector value from the photodetector array;

determining a position of the spinal cord based on the first photodetector value and the second photodetector value;

determining a group of electrode settings for at least one electrode in the first array of electrodes and at least one electrode in the second array of electrodes based on the position of the spinal cord;

adjusting the pulse generator based on the group of electrode settings; and,

sending a first pulse to at least one electrode in the first array of electrodes and a second pulse to at least one of the second array of electrodes to effect spinal cord stimulation to the patient.

BRIEF DESCRIPTION OF DRAWINGS

[0019] The following disclosure is understood best in association with the accompanying figures. Like components share like numbers.

[0020] Figure 1 shows a view of the human spine showing the various types of vertebrae and an approximate position of an electrode array for spinal cord stimulation;

[0021] Figure 2 shows a transverse view of a thoracic vertebra indicating the position of the spinal cord and an electrode array for spinal cord stimulation;

[0022] Figure 3 shows a sagital cross section view of the human spine showing the approximate position of an electrode array for spinal cord stimulation;

[0023] Figure 4 shows a prior art electrode array for spinal cord stimulation;

[0024] Figures 5a and 5b show the relative electric field produced by a preferred embodiment as a spinal cord precesses about an orbit in the spinal canal;

[0025] Figure 6a shows a cross-sectional view of an electrode array centrally located in relation to a spinal cord at 0° displacement;

[0026] Figure 6b shows a cross-sectional view of an electrode array centrally located in relation to a spinal cord at 90° displacement;

[0027] Figure 6c shows a cross-sectional view of an electrode array centrally located in relation to a spinal cord at 180° displacement;

[0028] Figure 6d shows a cross-sectional view of an electrode array centrally located in relation to a spinal cord at 270° displacement;

[0029] Figure 7 shows a schematic representation of a preferred embodiment of the positionally sensitive spinal cord stimulation system;

[0030] Figures 8a and 8b show two preferred embodiments of an electrode assembly;

[0031] Figure 9 shows an alternate embodiment of an electrode assembly;

[0032] Figure 10 shows an alternate embodiment of an electrode assembly;

[0033] Figure 11a is a block diagram of the components of a preferred embodiment of a pulse generation and optical signal processing unit;

[0034] Figure 11b is a block diagram of the components of a preferred embodiment of an SCS controller;

[0035] Figure 11c is a block diagram of the components of a preferred embodiment of a calibration and programming unit;

[0036] Figures 12a through 12d are flow diagrams of a method of operation of a preferred embodiment;

[0037] Figures 13a through 13c are flow diagrams of a method of calibrating a preferred embodiment;

[0038] Figure 14 is a graphic representation of a calibration table.

DETAILED DESCRIPTION

[0039] The distance between a stimulating electrode and the spinal cord surface may be inferred from a function dependent upon: 1) the optical path lengths of light between an IR emitter and a set of photodetectors, where the light is reflected from the spinal cord; 2) the spinal cord geometry; 3) the optical divergence of the IR emitter; and 4) the presence of chromophores in the optical path.

[0040] The dura surrounding the spinal cord itself is translucent to near infrared light. Near infrared light will be scattered by, and will reflect from the spinal cord. Cerebrospinal fluid will negligibly scatter near infrared light, but will not act as a significant reflector of near-infrared light. Light from the emitter passes through thin, relatively avascular, dura, to enter cerebrospinal fluid, CSF, which produces very little scattered light. Light incident on spinal cord experiences scatter resulting in a portion being reflected and another portion being absorbed by chromophores.

[0041] Optical absorption in fluid medium may be described by the Beer-Lambert Law (Beer's Law), which is reasonably accurate for a range of chromophores and concentrations. Beer's Law, states that the optical absorbance of a fluid with a chromophore concentration varies linearly with path length through the fluid and the chromophore concentration as:

$$A_\lambda = \varepsilon_\lambda bc \,, \qquad (1)$$

[0042] where:

ε_λ = molar absorptivity or extinction coefficient of the chromophore at wavelength λ (the optical density of a 1-cm thick sample of a 1 M solution);
b = sample path length in centimeters; and
c = concentration of the compound in the sample, in molarity (mol L-1).

[0043] The absorbance (A_λ) at a wavelength λ is related to the ratio of light energy

passing through the fluid, I, to the incident light energy, I_0, in

$$A_\lambda = -\log (I/I_0). \quad (2)$$

[0044] For deoxyhemoglobin and oxyhemoglobin, the extinction coefficient spectra are well known.

[0045] The path length within the spinal cord is dependent upon the geometry of the ellipsoid shaped spinal cord and its normal vector relative to the optical axes of the emitter and detector pair.

[0046] The optical path length within CSF is roughly equal to the nominal geometric path length as the scatter is small and the index of refraction does not vary considerably along the path. Light absorption of the CSF may be approximated by that of its primary constituent, H_20. Sensitivity of the system to CSF path length may be optimized using a light wavelength at a local maxima of the water extinction coefficient curve near 950-1000 nm.

[0047] When considering the emitter wavelength, one must also consider the extinction coefficients of the primary chromophores, deoxy- and oxy-hemoglobin. To minimize effects of blood flow changes within the spinal cord (although these are thought to be insignificant in the quasi-static sense), one may select the isosbestic wavelength of these chromophore species, preferably at about 805 nm.

[0048] The geometry of the emitter-detector pair relative to the spinal cord is the parameter most prone to variability. The variance results from factors such as dependence upon placement of the electrode within the spinal canal, canal diameter, spinal cord shape, spinal cord caliber, and presence of scoliotic or kyphotic curvature within the spine. Consequently, this geometric parameter is the primary reason that the system must be calibrated, *in situ, in vivo*. Spinal cord position may then be inferred through various methods from data obtained at

extremes of body position.

[0049] The effects of geometry may be minimized by minimizing the angle between the emitter and detector optical axes relative to the spinal cord surface normal vector.

[0050] The beam divergence of the emitter relative to the incident and reflected rays will influence the detected light amplitude.

[0051] It is desirable to maintain a constant electric field at a group of target cells in the spinal cord as the spinal cord moves in order to consistently reduce the transmission of a pain sensation to the brain. As the patient bends forward to 0°, the spinal cord moves forward in its orbit in the spinal canal. An equal increase in stimulation pulse amplitude for each electrode pair is required to maintain the same electric field density. As the patient bends to the right 90°, the spinal cord moves to the right in its orbit in the spinal canal. A decrease in electrode stimulation pulse amplitude in the right electrode and an increase in electrode stimulation pulse amplitude in the left electrode of the electrode pair is required. As the patient bends backward to 180°, the spinal cord moves back in its orbit in the spinal canal. A decrease in electrode stimulation pulse amplitude is required to maintain a constant electric field across the spinal cord. As the patient bends to the left to 270°, the spinal cord moves to the left in its orbit. A decrease in electrode stimulation pulse amplitude in the left electrode and an increase in electrode stimulation pulse amplitude in the right electrode of the electrode pair is required.

[0052] Figures 5a and 5b show the relative electric field intensity required to be generated at a left and right electrode, respectively, for maintenance of a constant field at any point across in a horizontal cross section of the spinal cord as the spinal cord is moved through an orbit of 360° in the spinal canal.

[0053] Referring to Figures 6a through 6d, the positional relationship between the IR

emitters, the photodetectors and the electrodes during spinal movement will be described.

[0054] Referring to Figure 6a, spinal cord **20** is positioned forward at a 0° location in the spinal canal. Electrode array **40** is implanted outside dura **21**. IR emitter **42** is centrally positioned on optical axis **125**. Electrodes **41L** and **41R** are positioned toward the dura and within an operational range of target cells **19**. Photodetectors **43L** and **43R** are positioned within an operational range of spinal cord **20**. Target cells **19** are positioned within spinal cord **20** in an arbitrary but constant position with respect to the spinal cord.

[0055] In operation, IR emitter **42** produces light ray **48** which forms an angle **121** with optical axis **125**. Light ray **48** is reflected from spinal cord **20** and enters photodetector **43R** thereby producing an electrical current. IR emitter **42** also produces light ray **49** which forms angle **122** with optical axis **125**. Light ray **49** is reflected from spinal cord **20** and enters photodetector **43L** thereby producing an electric current. An electric field produced by electrode **41R** is produced reaching target cells **19**. Similarly, an electric field produced by electrode **41L** is produced reaching target cells **19**. Amplitudes A_L and A_R are the current to drive both the left and the right electrode, respectively. Both are relatively high. Light ray **48** traverses a distance D_1 between IR emitter **42** and photodetector **43R**. Light ray **49** traverses a distance of D_2 between IR emitter **42** and electrode **41L**. The distances D_1 and D_2 are roughly equal and both relatively high. The photocurrents produced by the photodetectors are roughly equal.

[0056] Referring to Figure 6b, the spinal cord is shifted to the right 90° position by rotation through angle **128** and linear translation **127**.

[0057] In operation, IR emitter **42** produces light ray **48** which forms an angle **121** with optical axis **125**. Light ray **48** is reflected from spinal cord **20** and is received by photodetector **43R**. IR emitter **42** also produces light ray **49** which forms an angle **122** with optical axis **125**.

Light ray **48** is reflected from spinal cord **20** and is received by photodetector **43R**. Light ray **49** is reflected from spinal cord **20** and is received by photodetector **43L**. The distance from electrode **41L**, to the target cells is relatively high compared to the distance from electrode **41R**. Hence, the current amplitude for electrode **43L** is relatively high compared to that of the electrode **43R**. The total distance traversed for light ray **48** is distance D_3. The total distance traversed by light ray **49** is distance D_4. It can be seen that distance D_3 is lesser than distance D_1 and distance D_2 and is relatively low. Distance D_4 is approximately equal to distance D_1 and distance D_2. The photocurrent produced by photodetector **43L** is relatively low compared to the photocurrent produced by photodetector **43R**.

[0058] Referring to Figure 6c, spinal cord **20** is positioned rearward at a 180° location in the spinal canal with a linear translation **126** with respect to the 0° location.

[0059] In operation, IR emitter **42** produces light ray **48** which forms an angle **121** with optical axis **125**. Light ray **48** is reflected from spinal cord **20** and enters photodetector **43R**. IR emitter **42** also produces light ray **49** which forms an angle **122** with optical axis **125**. Light ray **49** is reflected from spinal cord **20** and is received by photodetector **43L**. The distances from left electrode **41L** and right electrode **41R** to the target cells are both relatively low. Hence, the amplitudes of the current to the electrodes A_L and A_R are relatively low compared to Figures 6a and 6b. Light ray **48** traverses the distance D_5 between IR emitter **42** and photodetector **43R**. Light ray **49** traverses a distance D_6 between IR emitter **42** and photodetector **43L**. It can be seen that distances D_5 and D_6 are approximately equal. Further, distances D_5 and D_6 are less than distances D_1 and D_2. The photocurrents produced by both photodetectors are relatively high compared to the photocurrents of Figure 6a.

[0060] Referring to 6d, the spinal cord is shifted in position by rotation through angle

130 and linear translation **129**. The 270° shifted position corresponds to a bend of the patient to left.

[0061] In operation, IR emitter **42** produces light ray **49** which forms an angle **122** with optical axis **125**. IR emitter **42** also produces light ray **48** which forms angle **121** with optical axis **125**. Light ray **49** is reflected from spinal cord **20** and is received by photodetector **43L**. Light ray **48** is reflected from spinal cord **20** and is received by photodetector **43R**. The distance from left electrode **41L** to the target cells is relatively low compared to the distance from the right electrode **41R** to the target cells. Hence, the current amplitude for electrode **41L** is relatively low compared to the current for right electrode **43R**. The distance traversed for light ray **49** is distance D_8. The distance traversed for light ray **48** is D_7. It can be seen that distance D_7 is greater than distance D_8. It can also be seen that distance D_7 is approximately equal to distances D_1 and D_2. It can further be seen that distance D_8 is approximately equal to distances D_6 and D_5. The photocurrent produced by photodetector **43L** is relatively high compared to the photocurrent produced by photodetector **43R**.

[0062] The relative relationship between the received photocurrent signals, P_L and P_R, (from photodetectors **43L** and **43R**, respectively) and the required current amplitudes of the current signals to the electrodes, A_L and A_R, can be summarized in the following table for the four extreme positions of the spinal cord in the spinal canal.

Position	P_L	P_R	A_L	A_R
Front - 0°	L	L	H	H
Right - 90°	L	H	H	L
Back - 180°	H	H	L	L
Left - 270°	H	L	L	H

Table 1.

[0063] Optical ratios associated with each photodetector pair correlate to a function of

spinal cord position as determined ratiometrically (for side-to-side movement) and proportionally (for front-to-back movement) to the detected light intensities.

[0064] The ratio of the current signals from photodetector **43L** and photodetector **43R** is representative of spinal position left to right.

$$r = \frac{P_L}{P_R} \tag{3}$$

[0065] The intensity of the photocurrent signals is representative of spinal position front to back. The total intensity can be represented by:

$$I = P_L + P_R \tag{4}$$

[0066] Referring to Figure 7, a preferred embodiment of the implanted components of the system is described. Spinal cord stimulator **45** includes pulse generator and signal processor (PGSP) **50** and electrode assembly **40**. Main lead **51** connects electrode assembly **40** to PGSP unit **50**. PGSP unit **50** provides power to the electrodes and the IR emitter and houses the electrical components of the system. PGSP unit **50** gathers and processes photodetector signals and makes adjustments to the electrode current (or voltage) based on the photodetector signals. PGSP unit **50** is connected by wireless communication link **52** across skin boundary **56** to SCS controller **53**. The SCS controller is configured to allow activation of and adjustments to PS-SCS stimulator percutaneously. PSGP unit **50** is also connected by wireless communication link **55** to calibration unit **54**. Calibration unit **54** is programmed to accept patient feedback and transmit it to PGSP **50** during calibration.

[0067] Referring to Figure 8a, a first preferred embodiment of electrode assembly **40a** will be described. IR emitter **42** is centrally positioned in elastomeric housing **46a**. A vertical

linear array of electrodes, **41L** and **41R**, are positioned to each side of the IR emitter. Photodetectors **43L** and **43R** are positioned to the left and right of the arrays of electrodes **41L** and **41R**, respectively, and in horizontal alignment with the IR emitter. Each electrode has a separate electrical conductor in a set of electrode leads contained in main lead **51** so that the current to each contact may be independently controlled. The components of the electrode assembly are sealed in elastomeric housing **46a**.

[0068] Referring to Figure 8b, a second preferred embodiment of electrode assembly **40a** will be described. A vertical linear array of electrodes, **41L** and **41R**, are positioned to each side of the IR emitter. An IR emitter and photodetector are packaged into a single integrated device as an IR emitter/detector pair. IR emitter/detector pair **45L** and IR emitter/detector pair **45R** are positioned to the left and right of the arrays of electrodes **41L** and **41R**, respectively. Each electrode has a separate electrical conductor in a set of electrode leads contained in main lead **51** so that the current to each contact may be independently controlled. The components of the electrode assembly are sealed in elastomeric housing **46a**. Figure 8B indicates the physical locations of the IR emitter/detector pairs to be slightly outside of the array of electrodes. In alternate embodiments, the IR emitter detector pairs may be located in line with the electrode array or inside of the electrode array. In another alternate embodiment, a central IR emitter/detector pair may be situated in between the left and right IR emitter/detector pairs.

[0069] A suitable single integrated device comprising a photoemitter and a photodarlington detector is part number OPB707A from Optek Technology, Inc.

[0070] Figure 9 shows an alternate embodiment of electrode assembly **40b**. Electrode assembly **40b** includes two sets of electrodes **41L** and **41R**, a linear set of IR emitters **42a** and two sets of IR photodetectors **44L** and **44R**. Set of IR emitters **42A** are preferably located in a

vertical line near the center of the elastomeric housing. The sets of electrodes are positioned in vertical rows to each side of the IR emitters. The number of electrodes may vary depending on the dimensions of the elastomeric housing. IR photodetectors **44L** and **44R** positioned to each side of the two sets of electrodes. Each electrode has a separate electrical conductor in a set of electrode leads contained in main lead **51** so that the current to each contact may be independently controlled. The components of the electrode assembly are sealed into the elastomeric housing **46b**.

[0071] Figure 10 illustrates an alternate embodiment of electrode assembly **440**. Electrode assembly **440** includes two sets of electrodes **441L** and **441R**, a set of optical lenses **442** for light delivery, optical lenses **443L** and optical lenses **443R** for light collection. Optical fibers are terminated in each of the lenses and routed into main lead **451**. Optical lenses **442** act to direct light from the optical fibers toward the spinal cord uniformly. In the preferred embodiment, the lenses are Fresnel lenses which reduce the profile depth of the elastomeric housing and diffuse light uniformly. Optical lenses **443L** and **443R** act as collectors to efficiently gather and collimate light received. Each electrode is provided a separate electrical conductor in main lead **451** so that the current to each electrode may be independently controlled.

[0072] PGSP unit **50** is preferably powered by batteries. In an alternate embodiment, PGSP unit **50** derives power from capacitive or inductive coupling devices. Calibration may further calibrate the batteries, the capacitive devices, or inductive coupling in PGSP unit **50**. Communication links **52** or **55** may further serve as a means of providing electrical charge for the batteries or capacitive devices of PGSP unit **50**.

[0073] Referring to Figure 11a, PSGP unit **50** will be described. PSGP unit **50**

comprises CPU **70** including onboard memory **72**. CPU **70** is connected to pulse modulator **62** and pulse generator **60**. Modulator **62** is also connected to pulse generator **60**. CPU **70** is also operatively connected to optical modulator **68** and optical signal processor **64**. Optical modulator **68** is connected to infrared emitter driver **66**. Infrared emitter driver **66** is connected to the IR emitter in the electrode assembly.

[0074] IR emitter driver **66** is also connected to IR emitter **79**. In embodiments which require fiber optic connection, infrared emitters **79** include appropriate lenses and connectors to effectively couple IR emitter **79** to fiber **81**. Fiber **81** is connected to light delivery lenses in the electrode array.

[0075] CPU is also connected to optical signal processor **64**. Optical signal processor **64** is connected to the set of photodetectors in electrode assembly **40**. Pulse generator **60** is connected to the set of electrodes in electrode assembly **40**.

[0076] In order to generate a pulse to the electrodes, the CPU consults a calibration table stored in onboard memory **72** to determine pulse width P_W, pulse frequency P_f and pulse amplitudes A_L and A_R for the left and right electrodes, respectively. The pulse width and frequency are transmitted to pulse modulator **62** which creates a modified square wave signal. The modified square wave signal is passed to pulse generator **60**. CPU **70** passes the amplitude for the left and right electrodes to pulse generator **60** in digital form. Pulse generator **60** then amplifies the modified square wave according to A_L and A_R to form left and right modified square wares and transmits them to the left and right electrodes, respectively.

[0077] The stimulation waveform of the preferred embodiment is a modified square wave having an amplitude and duration (or width). Pulse widths varying from 20 to 1000 microseconds have been shown to be effective. The frequency of the pulse waveforms between

20 and 120 hertz have been shown to be effective. The output amplitude is preferably from 0(zero) to +/- 20 mA or 0 (zero) to +/- 10 V but may vary beyond those ranges according to patient sensitivity.

[0078] Optical signal processor **64** receives signals from the set of photodetectors, filters the optical signals, and correlates the optical signals to the IR emitter amplitude, pulse width and frequency. Optical signal processor **64** may include a synchronized gated detection (e.g. lock-in amplifier type) function or other demodulation function to improve the signal to noise ratio of the detected light.

[0079] IR detector **77** is connected to optical signal processor **64**. IR detector **77** translates incoming light pulses from fiber **82** into electrical signals processed by optical signal processor **64**. IR detector **77** includes lenses to couple IR detector **77** to fiber **82**. Sensitivity of the set of IR photodetectors is similar to that of part APA3010P3Bt from Kingbright Corporation.

[0080] CPU **70** is connected to optical modulator **68**. Optical modulator **68** generates the IR emission waveform transmitted to the IR emitters according to parameters set and transmitted by CPU **70**. IR emitter driver **66** is connected to both optical modulator **68** and CPU **70**. In operation, to send an IR light pulse, the CPU activates the optical modulator to generate the appropriate waveform which is then transmitted to the IR emitter driver. The IR emitter driver transmits the waveform to the IR emitters. If IR emitter **79** is used, the pulse is launched into fiber **81**.

[0081] The IR emission waveform set by CPU **70** may take several forms. For example, IR emitter pulse width may be very short to minimize power consumption. A single IR emitter pulse may occur for a set of electrode stimulation pulses. Typical wavelength of the IR

light from the set of IR emitters is 940 nm. Typical output intensity of the IR emitters is 1 to 2 mW and a suitable part is part # PDI-E900 from Advanced Photonix, Inc.

[0082] CPU **70** is in transcutaneous communications, via RF transceiver **71**, with calibration and programming unit **54** and SCS controller **53**.

[0083] Referring to Figure 11b, SCS controller **53** will be described. SCS controller **53** includes processor **900** connected to RF transceiver **902**, display **904**, input/output device **906**, and memory **908**. In the preferred embodiment, display **904** is a low power liquid crystal display adapted to show the current operational state of the system. I/O device **906** is a simple push button contact array which is constantly monitored by processor **900**. Memory **908** is onboard memory connected to processor **900**. In the preferred embodiment, RF transceiver **902** is a low power transmitter/receiver combination.

[0084] Referring to Figure 11c, calibration and programming unit **54** will be described. Calibration and programming unit **54** includes processor **1000** connected to onboard memory **1008**, input/output devices **1006** and **1007**, RF transceiver **1002** and display **1004**. Display **1004**, in the preferred embodiment, is a low power liquid crystal display. Input/output device **1006** and input/output device **1007** are simple push button switches monitored continuously by the processor. Memory **1008** is onboard processor **1000**. RF transceiver **1002** is a low power transmitter/receiver combination.

[0085] Referring to Figures 12a, 11a, 11b and 11c, method **80** of operation of the PS-SCS stimulator will be described. In the preferred embodiment, method **80** takes the form of a computer program which is resident in memory **72** of CPU **70** of PGSP **50**. When activated, the program forms a continuous cycle. At step **81**, RF transceiver **71** is continually polled for a change of operation code signal to be received from SCS controller **53**. One of three options is

always present, "start?", "calibrate?" and "stop?".

[0086] At step **83**, if operation change code "start?" is received, the method moves to step **92**. At step **92**, CPU **70** activates optical modulator **68**, which in turn activates IR emitter driver **66** to generate a set of current pulses sent to the IR emitters. At step **93**, the resultant current levels at the photodetectors, PD_L and PD_R, are measured by optical signal processor **64** and passed to CPU **70**. At step **95**, CPU estimates the amplitude A_L and A_R of the a train of pulses to be sent to the electrodes. At step **99**, optionally, the CPU sets the values of the pulse width P_W and frequency P_f of the pulse train to be sent to the electrodes. At step **152**, the CPU activates the pulse modulator to create the waveform of the pulse train to be sent to the electrodes and activates pulse generator **60** to generate the pulse train. At step **154**, the CPU stores the values of PD_L, PD_R, A_L, A_R, P_W and P_f in memory for future retrieval. The method then returns to step **81**.

[0087] If at step **83**, the operation change code is not "start?", the method proceeds to step **85**. At step **85**, the CPU determines if the operation change code is "calibrate?". If so, the method moves to step **87**. At step **87**, the CPU transmits the history log stored in memory to calibration unit **55**. At step **89**, the CPU enters the calibration routine as will be described more fully later. The method then returns to step **81**.

[0088] If at step **85**, the operation change code is not "calibrate?", the method moves to step **91**. At step **91**, the CPU determines if the operation change code is "stop?". If so, the method returns to step **81**. If not, the method proceeds to step **92** and continues as previously described.

[0089] In the preferred embodiment, the pulse width and frequency is kept constant for a given patient and only the left and right electrode amplitudes are varied.

[0090] Referring to Figure 12b, an alternate embodiment of estimating amplitude values, at step **95** will be described. In this embodiment, the CPU time averages historical amplitudes A_L and A_R to arrive at the estimated electrode amplitudes. At step **96**, the CPU obtains a set of historical values for A_L and A_R and a predetermined weighting value from memory.

[0091] At step **97**, the following equation is applied:

$$A_L(delivered) = \frac{w_k \cdot A_L(k) + w_{k-1} \cdot A_L(k-1) + w_{k-2} \cdot A_L(k-2) + \ldots}{w_k + w_{k-1} + w_{k-2} + \ldots} \quad (5)$$

where:

w_k = predetermined weight for the values of A_L at the current time $A_L(k)$ and earlier times $A_L(k\text{-}1)$, $A_L(k\text{-}2)$, … At time k;
A_L = left electrode amplitude; and,

[0092] At step **98**, the following equation is applied:

$$A_R(delivered) = \frac{w_k \cdot A_R(k) + w_{k-1} \cdot A_R(k-1) + w_{k-2} \cdot A_R(k-2) + \ldots}{w_k + w_{k-1} + w_{k-2} + \ldots} \quad (6)$$

where:

w_k = predetermined weight for the values of A_R at the current time $A_R(k)$ and earlier times $A_R(k\text{-}1)$, $A_R(k\text{-}2)$, … At time k;
A_R = right electrode amplitude.

[0093] Referring to Figure 12c, an alternate method of estimating amplitude values at step **95** will be described.

[0094] At step **100**, the CPU computes a distance factor dP according to the equation:

$$dP = \sqrt{(PD_L - P_L)^2 + (PD_R - P_R)^2} \quad (7)$$

where:

PD_L = measured value of left photodetector current;

PD_R = measured value of right photodetector current;
P_L = calibration table value of left photdetector current; and
P_R = calibration table value of right photodetector current.

[0095] *dP* is calculated for each row corresponding to patient positions 1-4 of the calibration table. At step 102, the values A_L and A_R are estimated as those that correspond to the row of the calibration table having the smallest distance factor *dP*.

[0096] Referring to Figure 12d, an alternate method of estimating amplitude values, step **95**, will be described.

[0097] At step **105**, the CPU consults the calibration table to locate the closest pair of consecutive PD_L values that bracket the measured value P_L, $[PD_{L\,TOP}, PD_{L\,BOTTOM}]$. At step **110**, the CPU locates the pair of A_L values that correspond to the closest pair of PD_L values, $[A_{L\,TOP}, A_{L\,BOTTOM}]$. At step **115**, the CPU applies the interpolation equation to locate the estimated value of A_L, as follows:

$$A_L = \left(\frac{(A_{L\,TOP} - A_{L\,BOTTOM})}{(PD_{L\,TOP} - PD_{L\,BOTTOM})} \right) \cdot (P_L - PD_{L\,BOTTOM}) + A_{L\,BOTTOM} \qquad (8)$$

where:
A_L = estimated value of the left electrode pulse current;
$PD_{L\,TOP}$ = upper bracketed value of photodetector current from the calibration table;
$PD_{L\,BOTTOM}$ = lower bracketed value of the photodetector current from the calibration table;
$A_{L\,TOP}$ = upper value of the electrode pulse current from the calibration table corresponding to $PD_{L\,TOP}$;
$A_{L\,BOTTOM}$ = lower value of the pair of electrode amplitudes from the calibration table corresponding to $PD_{L\,BOTTOM}$.

[0098] At step **117**, the CPU consults the calibration table to locate the closest pair of consecutive PD_R values that bracket the measured value P_R, $[PD_{R\,TOP}, PD_{R\,BOTTOM}]$. At step **119**, the CPU locates the pair of A_R values that correspond to the closest pair of PD_R values, $[A_{R\,TOP}, A_{R\,BOTTOM}]$. At step **120**, the CPU applies the interpolation equation to locate the estimated value

of A_R, as follows:

$$A_R = \left(\frac{(A_{R\,TOP} - A_{R\,BOTTOM})}{(PD_{R\,TOP} - PD_{R\,BOTTOM})} \right) \cdot (P_R - PD_{R\,BOTTOM}) + A_{R\,BOTTOM} \qquad (9)$$

where:

A_R = estimated value of the right electrode pulse current;
$PD_{R\,TOP}$ = upper bracketed value of photodetector current from the calibration table;
$PD_{R\,BOTTOM}$ = lower bracketed value of photodetector current from the calibration table;
$A_{R\,TOP}$ = upper value of the electrode pulse current from the calibration table corresponding to $PD_{R\,TOP}$;
$A_{R\,BOTTOM}$ = lower value of the pair of electrode amplitudes from the calibration table corresponding to $PD_{R\,BOTTOM}$.

[0099] Referring to Figure 12a, in the preferred embodiment, pulse width and frequency is kept constant for a given patient and only the left and right electrode amplitudes are varied. In an alternate embodiment, step **150** is performed whereby pulse width and pulse frequency are varied according to the calibration values stored in the calibration table for each electrode.

[00100] Referring to Figures 13a and 13b, a method of calibration of the SCS stimulator will be described.

[0100] Referring to Figures 13a, 11a and 11c, the processor is programmed to carry out steps of calibration method **300** upon request by a calibration control program. At step **520**, the levels of A_L and A_R are set at the minimum value of a predetermined range for each. At step **525**, the pulse generator is directed by the CPU to send a train of pulses to each of the left and right electrodes at the minimum levels of A_L and A_R, respectively. At step **530**, paresthesia perception feedback is solicited from the patient.

[0101] If the level of parasthesia is not optimal according to the patient feedback, then the method moves to step **532**. At step **532**, the processor monitors the input/output devices to

determine if A_L, A_R or both A_L and A_R need to be adjusted, or if the level of paresthesia is sufficient. If A_L needs to be increased or decreased from the current level, then the value of A_L is adjusted by a discrete amount in step **533**. If the level of A_L is at a maximum or a minimum level, an alert is made by the calibration and programming unit in step **534**. If A_R needs to be increased or decreased from the current level, then the value of A_R is adjusted by a discrete amount in step **535**. If the level of A_R is at a maximum or a minimum level, an alert is made by the calibration and programming unit in step **536**. The alert in step **534** and step **536** may be a visual indication, audio indication or both visual and audio indication.

[0102] After adjustment, the step **525** is repeated, and a train of pulses is delivered to each electrode at the new levels A_L and A_R. At step **530**, patient paresthesia feedback is again solicited. If the level of paresthesia is still not optimal according to the patient feedback, the method repeats steps **533**, **534**, **535** and **536** as required. If the level of paresthesia is sufficient according to patient feedback at step **532**, the method moves to step **538**.

[0103] At step **538**, the CPU stores the value A_L. At step **539**, the CPU stores the value of A_R. At step **540**, the CPU measures the optical signal feedback from the optical signal processor representative of the current from the left photodetector P_L. At step **550**, the CPU measures the optical feedback signal from the optical signal processor representative of the current from the right photodetector P_R. At steps **560** and **565**, the CPU stores P_L and P_R in the calibration table. At step **570**, the calibration method steps complete by returning control to the calibration control program.

[0104] Referring to Figures 13b and 11c, the processor of calibration unit **54** is programmed to further carry out the following method steps for a calibration control program **400** in cooperation with physical motion of the patient.

[0105] At step **350**, RF transceiver **1002** receives a signal indicative of a request to move the patient to a prone position and passes it to processor **1000**. At step **352**, the patient is positioned in a prone position. Calibration method **300**, as described in Figure 13a, is carried out to maximize the level of paresthesia experienced by the patient.

[0106] At step **360**, RF transceiver **1002** receives a signal indicative of a request to move the patient to a right lateral position and passes it to processor **1000**. At step **362**, the patient is positioned in a right lateral position. Calibration method **300** is then carried out to optimize the level of paresthesia experienced by the patient.

[0107] At step **370**, RF transceiver **1002** receives a signal indicative of a request to move the patient to a supine position and passes it to processor **1000**. At step **372**, the patient is positioned in a supine position. Calibration method **300** is then carried out to optimize the level of paresthesia experienced by the patient.

[0108] At step **380**, RF transceiver **1002** receives a signal indicative of a request to move the patient to a left lateral position and passes it to processor **1000**. At step **382**, the patient is positioned in a left lateral position. Calibration method **300** is then carried out to optimize the level of paresthesia experienced by the patient.

[0109] After steps **380, 382** and **300** finish, the calibration program is complete.

[0110] The order of patient positions in calibration program 400 may be changed in alternative embodiments. Additional patient positions may be added to calibration program **400** in alternative embodiments, for example, the patient may be rotated clockwise to calibrate a level of paresthesia required for a clockwise position.

[0111] Referring to Figures 13c and 11b, the various states of the SCS controller will be described. At state **505**, SCS controller **53** enters a waiting posture and continually polls I/O

unit **906**. Upon receipt, processor **900** enters run state **507** and transmits a "run" signal to RF transceiver **902**. RF transceiver then transmits the "run" signal to PGSP **50** for further action. After transmission, the processor returns to wait state **505**.

[0112] If a "stop" signal is received from I/O device **906**, processor **900** passes a signal to RF transceiver **902**, which in turn sends the signal to PGSP **50**. The processor then returns to wait state **505**.

[0113] If a "calibrate" signal is received from I/O unit **906**, at step **511**, processor **900** transmits a "calibrate" signal to RF transceiver **902**, which in turn sends the signal to PGSP **50**. Processor **900** then returns to wait state **505**.

[0114] Figure 14 shows a calibration table **1150** for the preferred embodiment. Each row is a record for the optimal electrode settings for a patient position for a specific pair of electrodes in the electrode assembly. Calibration table **1150** includes seven columns, patient position identifier **1152**, left photodetector value PD_L **1154**, right photodetector value PD_R **1156**, left electrode stimulation pulse amplitude A_L **1158**, right electrode pulse amplitude A_R **1160**, electrode stimulation pulse width P_W **1161**, and electrode pulse frequency P_f **1162**.

[0115] Patient position identifier **1152** in a preferred embodiment includes four positions, front (prone - 0°), right - 90°, back (supine - 180°) and left - 270°. Each row in Table **1150** is associated with one of the four patient positions. Left electrode stimulation pulse amplitude **1158** and right electrode stimulation pulse amplitude **1160** are values which are derived during calibration and recorded for different spinal cord positions, corresponding to the patient position. In the preferred embodiment, the left electrode stimulation pulse amplitude **1158** and right electrode stimulation pulse amplitude **1160** are directly proportional to the stimulation energy delivered to the respective electrodes.

[0116] In alternate embodiments, calibration may be performed for additional physical positions such that additional rows are placed in table **1150**.

[0117] Left photodetector value PD_L **1154** is the measured intensity for the left photodetector. Right photodetector value **1156** is the measured intensity for the right photodetector.

[0118] Electrode stimulation pulse width **1161** and frequency **1162** are each constant. However, in an alternate embodiment, electrode stimulation pulse width **1161** and electrode pulse frequency **1162** are varied through a predetermined range during calibration and recorded for each patient position.

[0119] The method **80** of Figure 12a can be extended to those SCS electrode assemblies that contain more than one pair of photodetectors. Stimulation energy can be delivered in different regions of the spinal cord defined by sectors in the SCS electrode assembly.

[0120] There are various other embodiments in which to realize the present invention. The photoemitter may be an IR emitter diode embedded in the electrode array or alternatively, the IR emitter diode may be mounted in the generator device and coupled with the stimulator electrode array via a fiber optic cable.

[0121] While the present invention has been described in terms of specific embodiments thereof, it will be understood in view of the present disclosure, that numerous variations upon the invention are now enabled to those skilled in the art, which variations yet reside within the scope of the present teaching. Accordingly, the invention is to be broadly construed and limited only by the scope and spirit of the claims now appended hereto.

The embodiments of the invention in which an exclusive property or privilege is claimed are defined as follows:

1. An apparatus for controlling spinal cord stimulation to a patient comprising:

a first array of electrodes embedded in a flexible substrate;

a second array of electrodes embedded in the flexible substrate;

the first array of electrodes and the second array of electrodes arranged in laterally opposed to positions;

a set of photoemitters embedded in the flexible substrate;

a first set of photodetectors embedded in the flexible substrate;

a second set of photodetectors embedded in the flexible substrate;

a signal processing unit comprising:

a central processing unit and memory,

a pulse generator, in communication with the central processing unit, connected to the first and second array of electrodes, and

an optical signal processor, in communication with the central processing unit, connected to the set of photoemitters, the first set of photodetectors and the second set of photodetectors;

a stimulation controller in communication with the signal processing unit and programmed to control the operation of the signal processing unit;

the flexible substrate configured to be implanted in the epidural space adjacent to the spinal cord of the patient and positioned such that light emitted from the set of photoemitters is reflected from the spinal cord of the patient into the first and second set of photodetectors;

wherein the signal processing unit is further programmed to carry out the steps of:

measuring a first photodetector value for a photodetector in the first set of photodetectors;

measuring a second photodetector value for a photodetector in the second set of photodetectors;

determining a position of the spinal cord based on the first photodetector value and the second photodetector value;

determining a group of electrode settings for at least one electrode in the first array of electrodes and at least one electrode in the second array of electrodes based on the position of the spinal cord;

adjusting the pulse generator based on the group of electrode settings; and,

initiating an electric pulse according to the group of electrode settings to provide spinal cord stimulation.

2. The apparatus of claim 1 wherein the signal processing unit is further programmed to carry out the step of:

computing a ratio of the first photodetector value to the second photodetector value as an optical ratio that is representative of spinal position left to right.

3. The apparatus of claim 1 wherein the signal processing unit is further programmed to carry out the step of:

computing a total of the first photodetector value and the second photodetector value as an optical intensity that is representative of spinal position front to back.

4. The apparatus of claim 1 further comprising a calibration system connected to the signal processing unit and wherein the calibration system is programmed to generate a calibration table comprising the first photodetector value, the second photodetector value and at least one of a group of a set of current pulse amplitudes, a set of current pulse widths, and a set of pulse frequencies.

5. The apparatus of claim 4 wherein the calibration system is further programmed to generate the calibration table in response to a set of patient positions of the patient.

6. The apparatus of claim 5 wherein the calibration system is further programmed to generate the calibration table in response to the set of patient positions corresponding to front (prone - 0°), right - 90°, back (supine - 180°), and left - 270°.

7. The apparatus of claim 1 wherein the step of determining a group of electrode settings includes comparing the first photodetector value and the second photodetector value

to a first stored photodetector value and a second stored photodetector value, respectively, in a stored calibration table containing the group of electrode settings.

8. The apparatus of claim 7 wherein the step of determining a group of electrodes settings includes interpolating the group of electrode settings from a calibrated set of electrode settings.

9. The apparatus of claim 7 wherein the step of determining a group of electrode settings includes time averaging a set of previous electrode settings.

10. The apparatus of claim 8 wherein the step of determining a group of electrode settings includes taking a weighted average of the calibrated set of electrode settings.

11. The apparatus of claim 1 further comprising a pulse modulator, connected to the pulse generator and the optical signal processor, for modulating pulses according to an amplitude, a frequency and a pulse width.

12. The apparatus of claim 1 further comprising an optical modulator, connected to the optical signal processor, for modulating light emitted from the set of photoemitters.

13. The apparatus of claim 1 wherein the first and second sets of photodetectors and the set of photoemitters comprise a set of emitter/detector devices wherein each emitter/detector device includes at least one photoemitter and at least one photodetector integrated into a single device.

14. The apparatus of claim 13 wherein the first and second sets of photodetectors comprise a set of photodarlington devices.

15. The apparatus of claim 1 wherein the first array of electrodes is positioned in a first column, the second array of electrodes is positioned in a second column; the set of photoemitters is arranged in a third column, the first set of photodetectors is arranged in a fourth column, and the second set of photodetectors is arranged in a fifth column.

16. The apparatus of claim 15 wherein the third column is fixed between the first column and the second column.

17. The apparatus of claim 16 wherein the first column is fixed between the fourth column and the third column, and wherein the second column is fixed between the fifth column and the third column.

18. A method of generating a command for controlling electrical stimulation with a stimulator configured to be implanted into an epidural space adjacent a spinal cord, the stimulator having a first array of electrodes in a first column, a second array of electrodes in a second column, a set of photoemitters in a third column, a first set of photodetectors in a fourth column, a second set of photodetectors in a fifth column, the method comprising:

configuring a connection of an electrical pulse generator to the first and second arrays of electrodes;

configuring a connection of an optical signal processor to the first and second sets of photodetectors;

configuring a connection of the optical signal processor to the set of photoemitters;

configuring control, by a central processing unit, of the electrical pulse generator and the optical signal processor;

configuring the central processing unit to be able to direct the set of photoemitters, with the optical signal processor, to send a set of light beams to the spinal cord of the patient;

configuring a first photodetector in the first set of photodetectors to be able to receive a first reflection of the light from at least one light beam in the set of light beams;

configuring a second photodetector in the second set of photodetectors to be able to receive a second reflection of the light from the at least one light beam in the set of light beams;

configuring the central processing unit to measure a first detected light value from the first photodetector;

configuring the central processing unit to measure a second detected light value from the second photodetector;

configuring the central processing unit to determine a position of the spinal cord based on the first detected light value and the second detected light value;

configuring the central processing unit to determine a group of electrode settings for at least one electrode in the first array of electrodes based on the position of the spinal cord and at least one electrode in the second array of electrodes based on the position of the spinal cord; and,

configuring the central processing unit to be able to output a first command indicating a first set of current pulses to be sent to the first array of electrodes and the second array of electrodes, from the electrical pulse generator, based on the group of electrode settings to effect electrical spinal cord stimulation.

19. The method of claim 18 wherein the step of determining a group of electrode settings includes a step of calibrating the stimulator in response to a set of patient positions.

20. The method of claim 19 wherein the step of calibrating includes the steps of:

generating a calibration table comprising a first set of photodetector values and a second set of photodetector values, and one of the group of a set of current pulse amplitudes, a set of current pulse widths, and a set of pulse frequencies; and,

storing the calibration table in a memory accessible by the central processing unit.

21. The method of claim 20 wherein the step of determining a group of electrode settings includes comparing the first detected light value to the set of left photodetector values and comparing the second detected light value to the set of right photodetector values in the calibration table.

22. The method of claim 21 wherein the step of determining a group of electrode settings includes calculating a weighted average of electrode settings.

23. The method of claim 21 wherein the step of determining a group of electrodes settings includes further subdividing the first and second arrays of electrodes into sectors.

24. The method of claim 20 wherein the step of determining the group of electrode settings includes interpolating at least one electrode setting of the group of electrode settings from the calibration table using the first detected light value and the second detected light value.

25. The method of claim 22 including the steps of:

establishing a communications link between a remote calibration computer and the central processing unit;

performing the step of calibrating using the remote calibration computer; and,

downloading the calibration table to the remote calibration computer.

26. The method of claim 18 wherein the method further includes configuring the central processing unit to modulate the pulse generator based on at least one step of the group of steps: modulating the pulse amplitude, modulating the pulse width and modulating the pulse frequency.

27. The method of claim 18 wherein the step of configuring the central processing unit includes a step of modulating the set of light beams.

28. The method of claim 27 wherein the step of measuring a first detected light value includes demodulating a detected signal from a photodetector in accordance with the step of modulating the set of light beams.

29. The method of claim 18 wherein the third column is situated between the first column and the second column.

30. The method of claim 18 wherein the first column is situated between the fourth column and the third column, and the second column is situated between the third column and the fifth column.

31. The method of claim 18 including remotely controlling the electrical pulse generator and the optical signal processor.

32. The method of claim 18 including outputting a second command indicating a second set of current pulses to be sent to the first array of electrodes and the second array of electrodes to maintain a constant stimulation intensity to the spinal cord during a set of positional changes.

33. The method of claim 18 including a step of outputting a further command indicating further current pulses to be sent to maintain a constant stimulation electric field strength to a point in the spinal cord during a set of positional changes of the spinal cord.

34. The method of claim 18 including computing a ratio of the first detected light value to the second detected light value as an optical ratio.

35. The method of claim 18 including computing a total light intensity as the sum of the first detected light value and the second detected light value as an optical intensity.

36. The method of claim 18 wherein the step of determining a group of electrode settings includes calculating a time average of previous electrode settings.

37. An apparatus for controlling spinal cord stimulation to a patient comprising:

a first array of electrodes embedded in an elastomer substrate and arranged in a first column;

a second array of electrodes embedded in the elastomer substrate arranged in a second column;

a first set of optical fibers embedded in the elastomer substrate and arranged in a third column;

a second set of optical fibers embedded in the elastomer substrate arranged in a fourth column;

a third set of optical fibers embedded in the elastomer substrate arranged in a fifth column;

a signal processing unit comprising:

a central processing unit and memory;

a pulse generator, in communication with the central processing unit, connected to the first and second arrays of electrodes;

an IR emitter optically, connected to the first set of optical fibers, to insert light into the first set of optical fibers; and

an optical signal processor, in communication with the central processing unit, connected to a photodetector array;

the photodetector array, optically connected to the second and third sets of optical fibers;

a stimulation controller, in communication with the signal processing unit and programmed to control the operation of the signal processing unit;

the elastomer substrate configured to be implanted in the epidural space adjacent to the spinal cord of the patient and positioned such that light emitted by the first set of optical fibers is reflected from the spinal cord of the patient into at least one optical fiber included in the second set of optical fibers and the third set of optical fibers;

wherein the signal processing unit is further programmed to carry out the operations of:

measuring a first photodetector value from the photodetector array;

measuring a second photodetector value from the photodetector array;

determining a position of the spinal cord based on the first photodetector value and the second photodetector value;

determining a group of electrode settings for at least one electrode in the first array of electrodes and at least one electrode in the second array of electrodes based on the position of the spinal cord;

adjusting the pulse generator based on the group of electrode settings; and,

sending a first pulse to at least one electrode in the first array of electrodes and a second pulse to at least one of the second array of electrodes to effect spinal cord stimulation to the patient.

38. The apparatus of claim 37 wherein the first set of optical fibers is terminated at the elastomer substrate in a set of dispersion lenses.

39. The apparatus of claim 37 wherein the second and third sets of optical fibers are terminated at the elastomer substrate in a set of collection lenses.

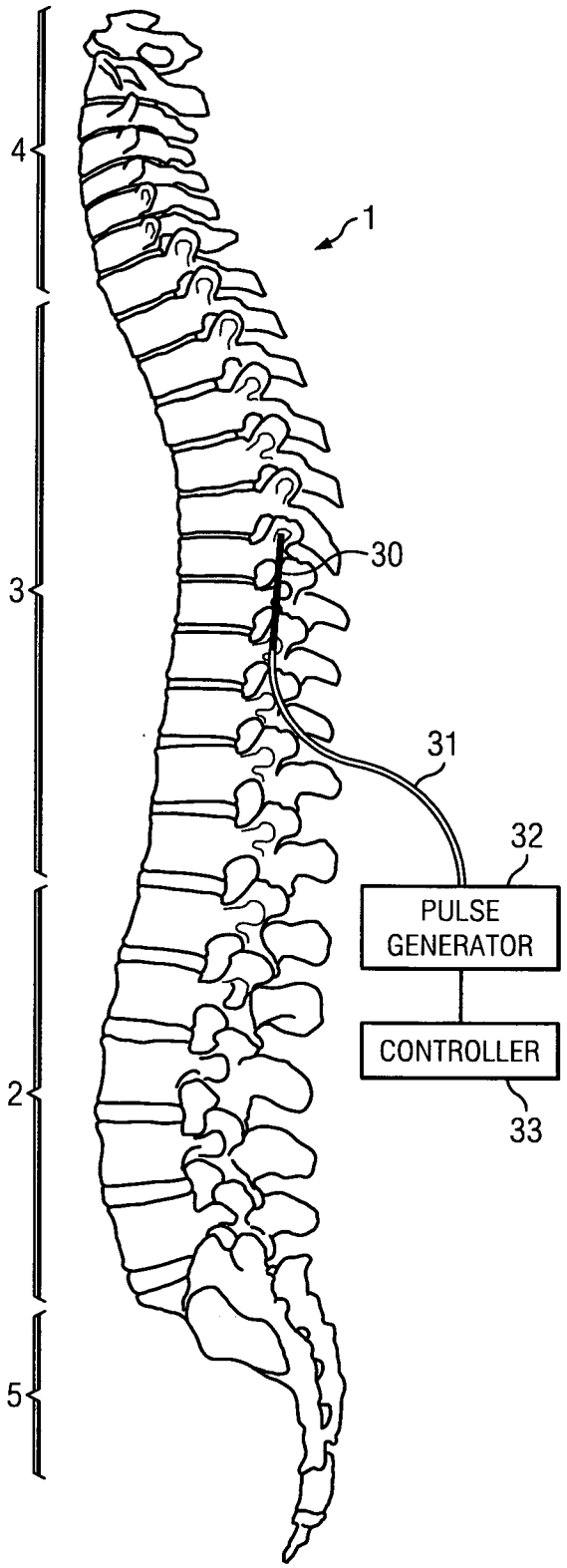

FIG. 1
(PRIOR ART)

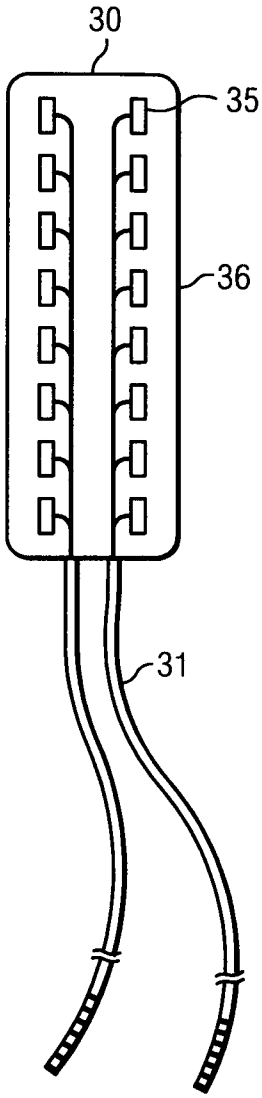

FIG. 4
(PRIOR ART)

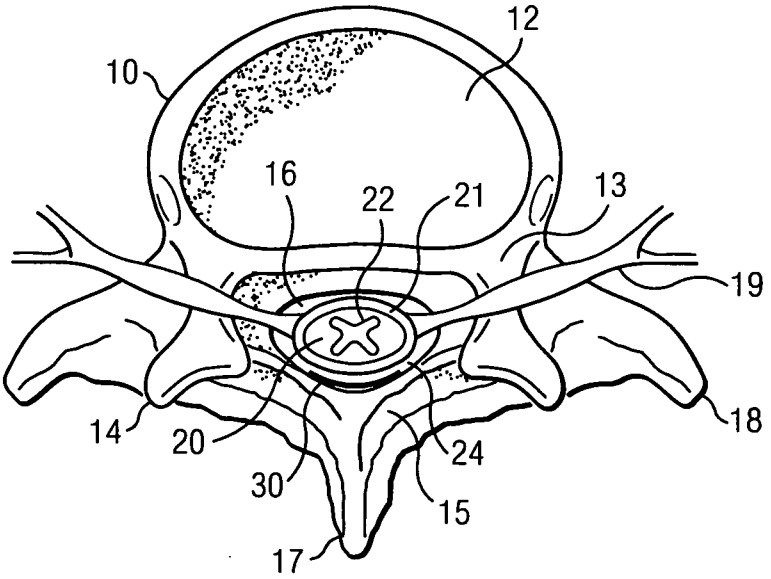

FIG. 2
(PRIOR ART)

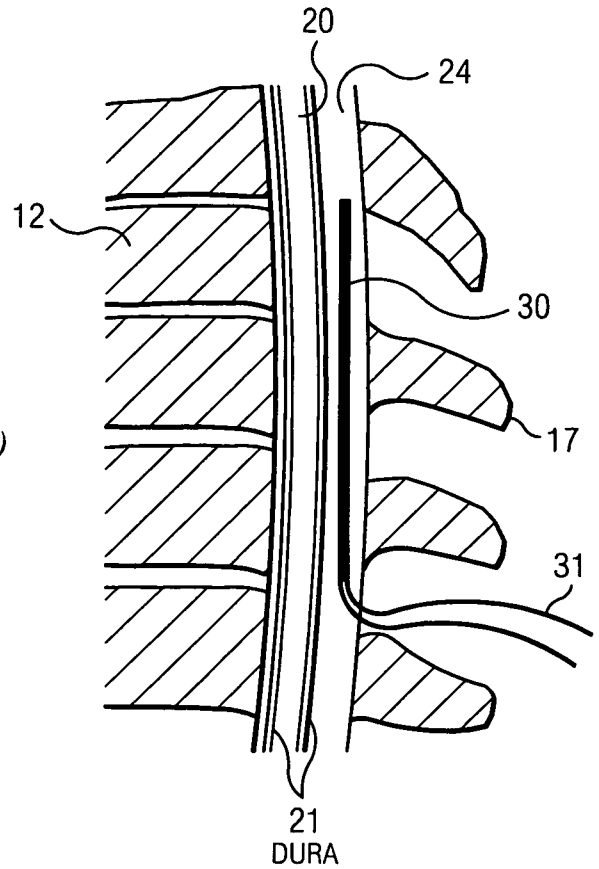

FIG. 3
(PRIOR ART)

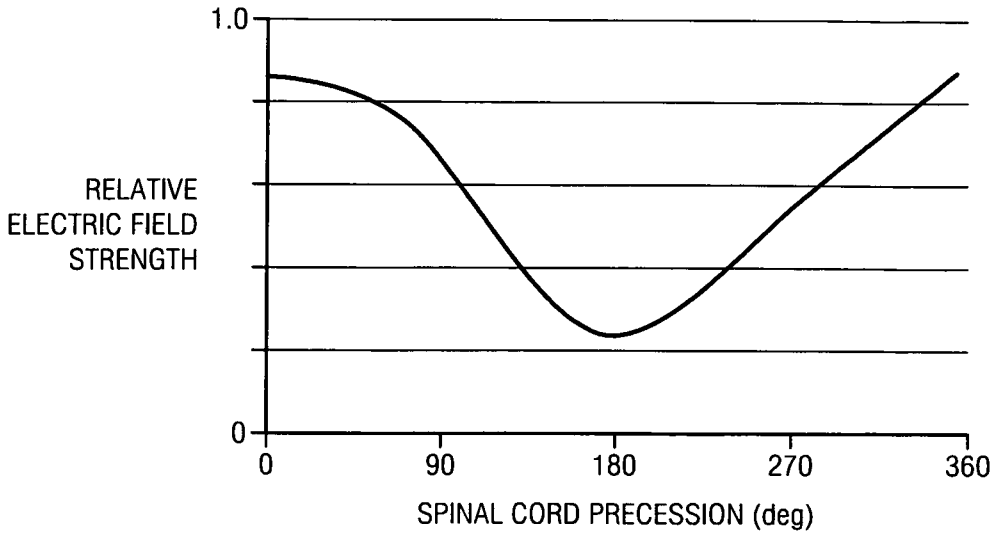
1.0
RELATIVE
ELECTRIC FIELD
STRENGTH
0
0
90
180
270
360
SPINAL CORD PRECESSION (deg)

FIG. 5a

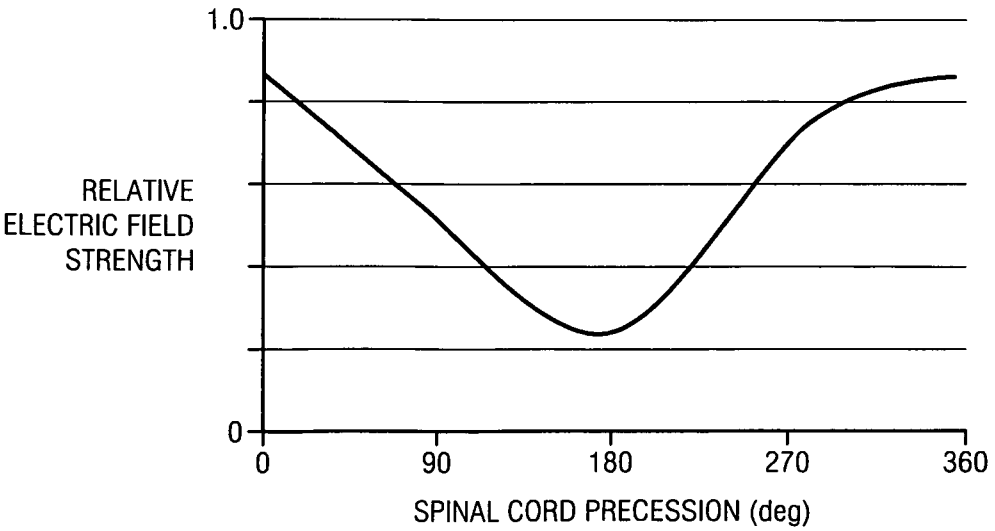
1.0
RELATIVE
ELECTRIC FIELD
STRENGTH
0
0
90
180
270
360
SPINAL CORD PRECESSION (deg)

FIG. 5b

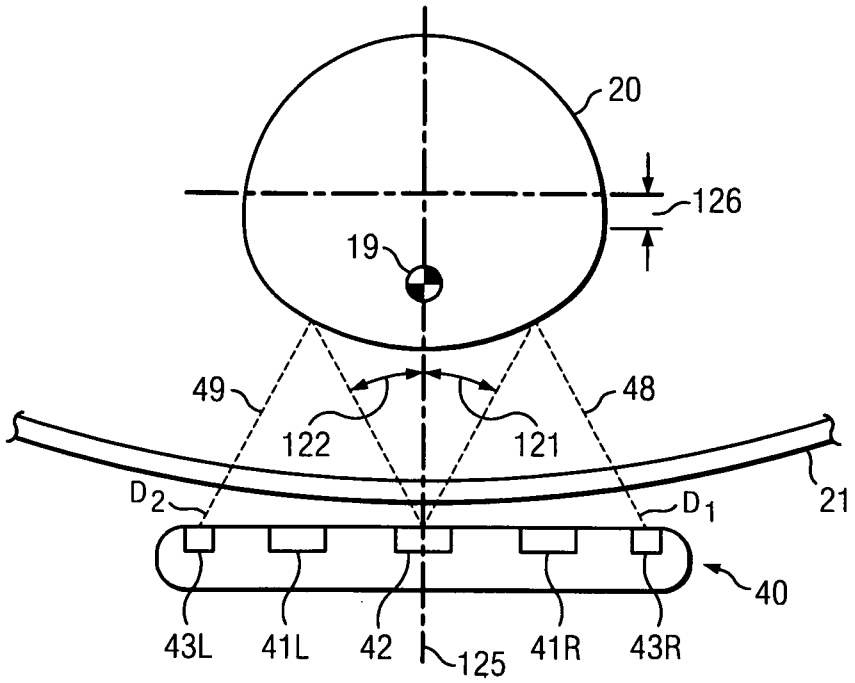
20
126
19
49
48
122
121
21
D2
D1
40
43L
41L
42
125
41R
43R
FRONT, 0°

FIG. 6a

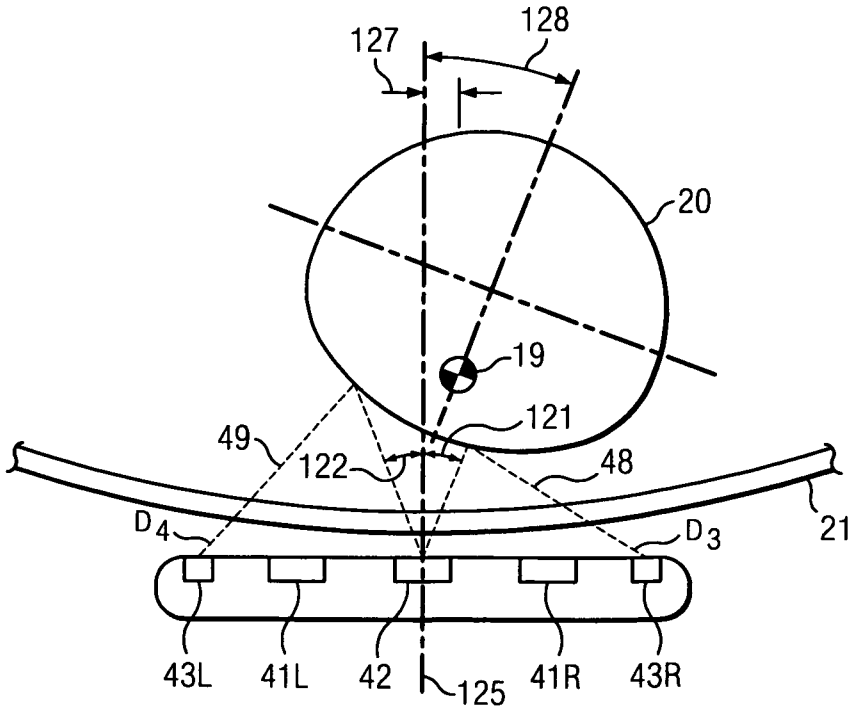
127
128
20
19
121
49
122
48
21
D4
D3
43L
41L
42
125
41R
43R
RIGHT, 90°

FIG. 6b

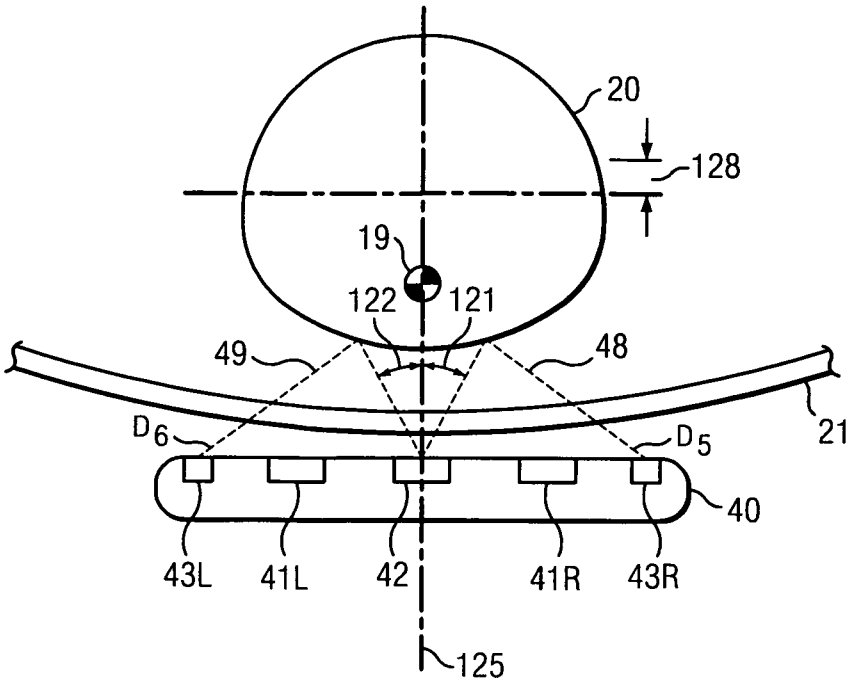

BACK, 180°

FIG. 6c

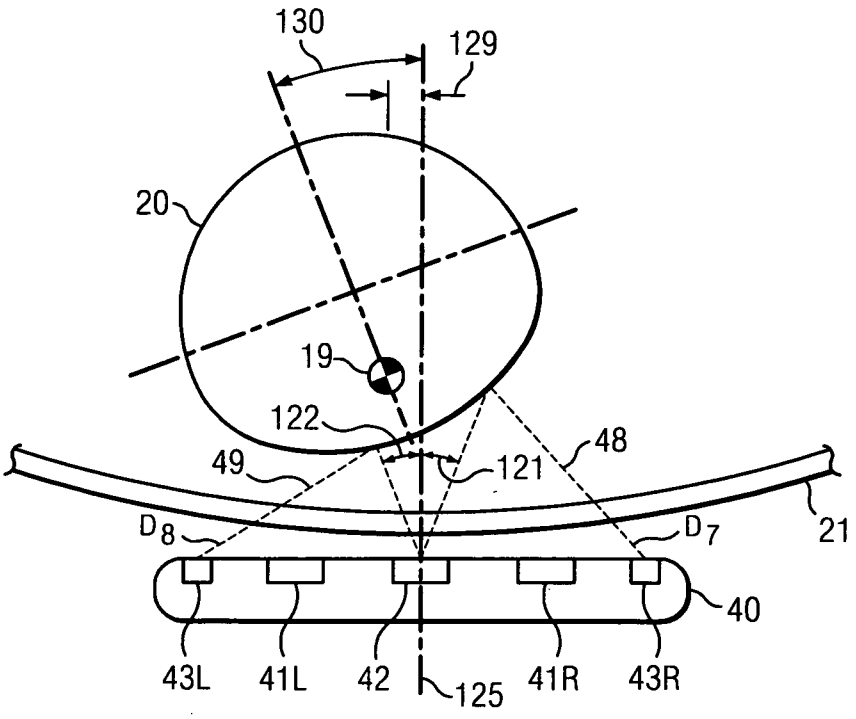

LEFT, 270°

FIG. 6d

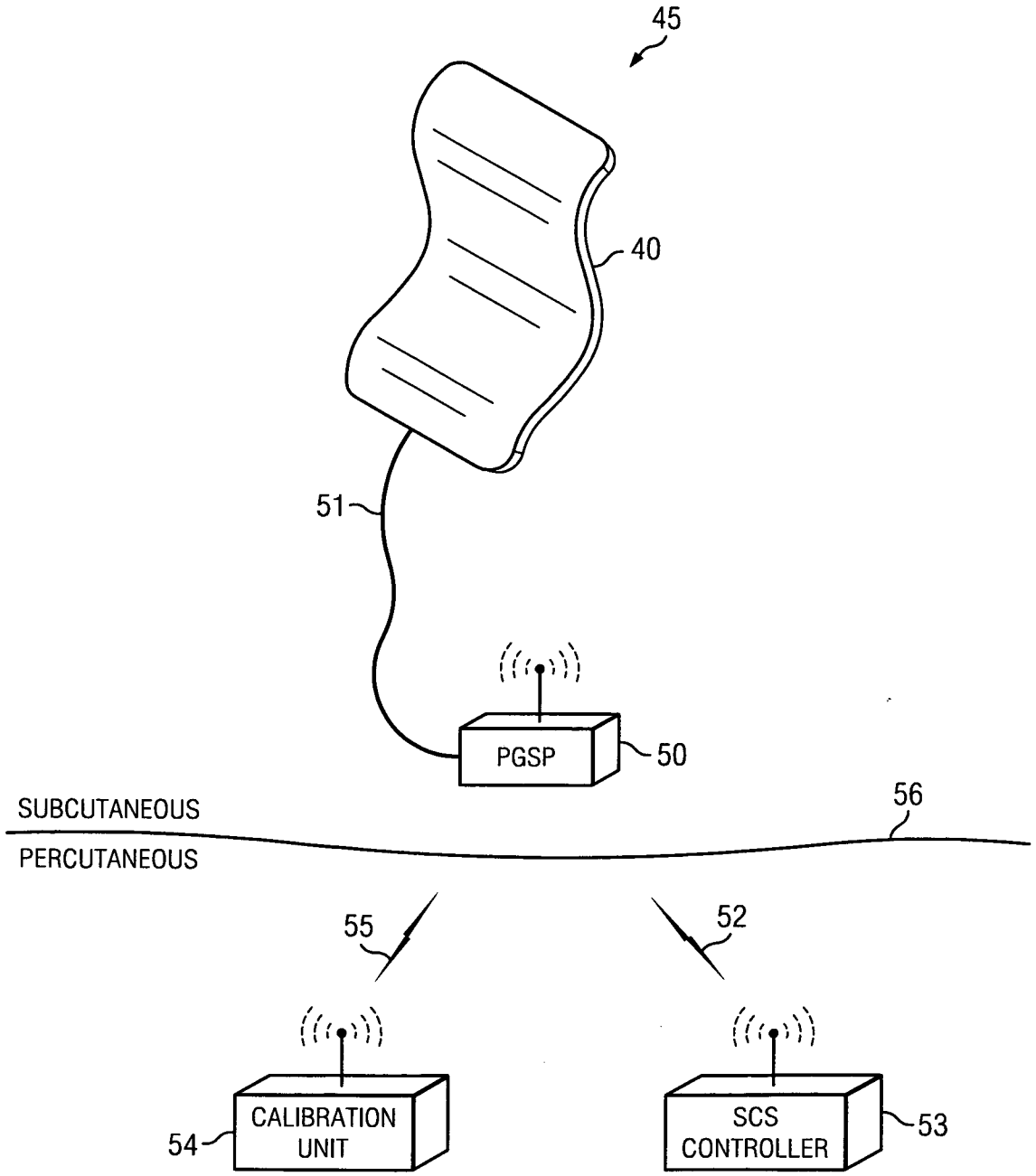
45
40
51
PGSP
50
SUBCUTANEOUS
PERCUTANEOUS
56
55
52
CALIBRATION UNIT
54
SCS CONTROLLER
53

FIG. 7

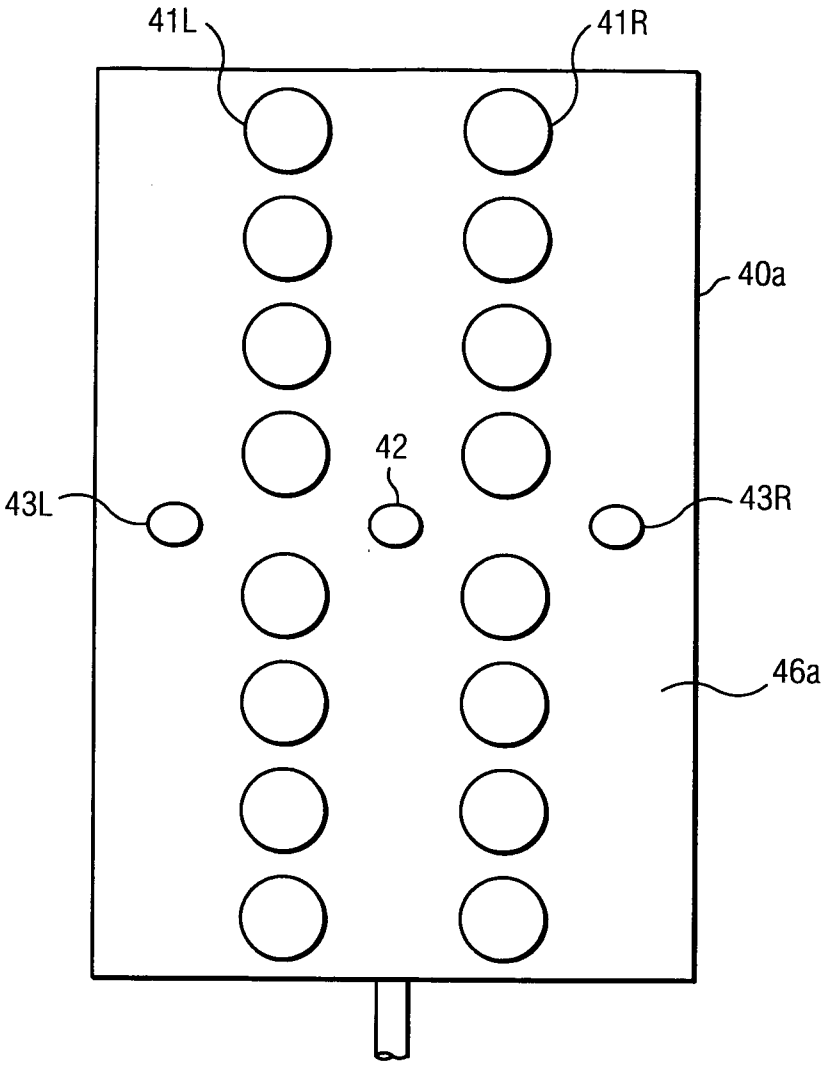

FIG. 8a

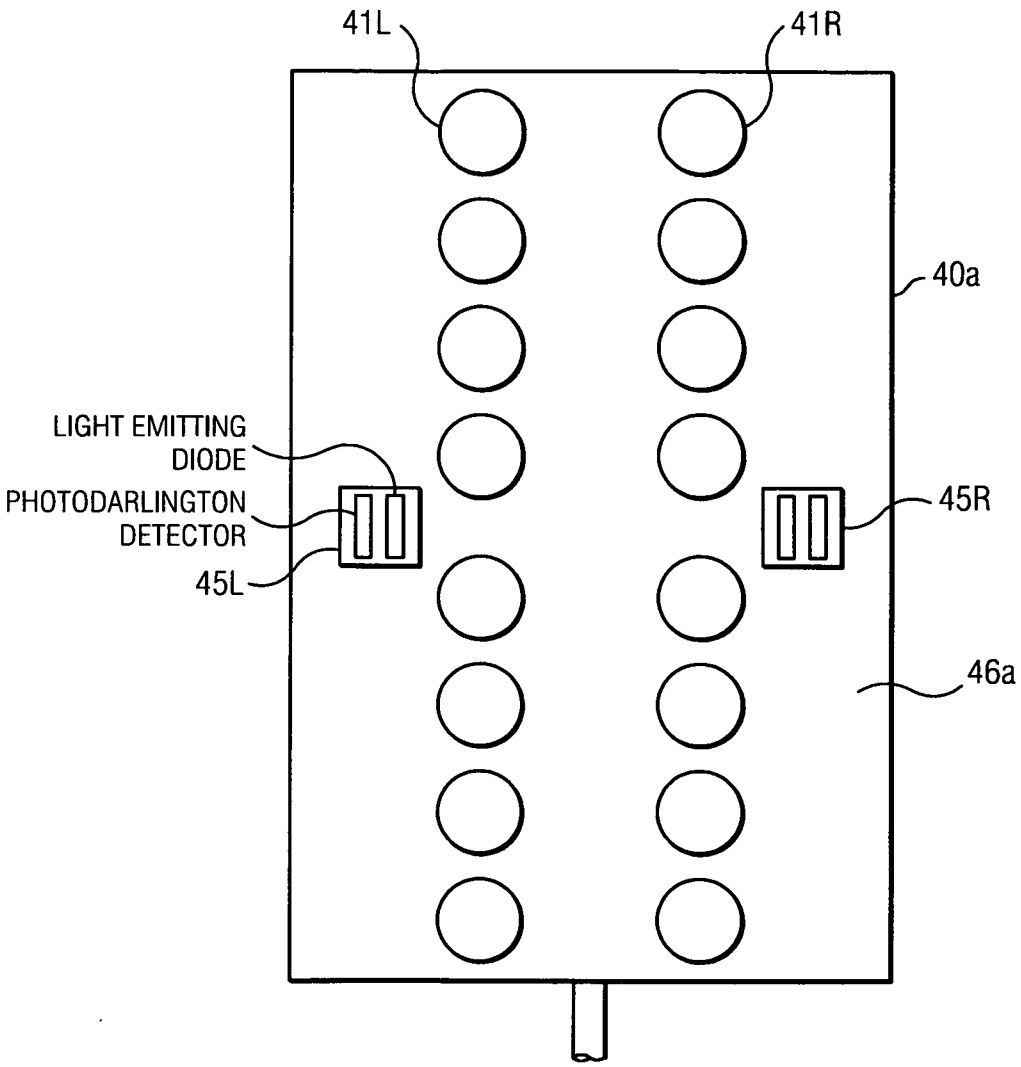
41L
41R
40a
LIGHT EMITTING DIODE
PHOTODARLINGTON DETECTOR
45L
45R
46a

FIG. 8b

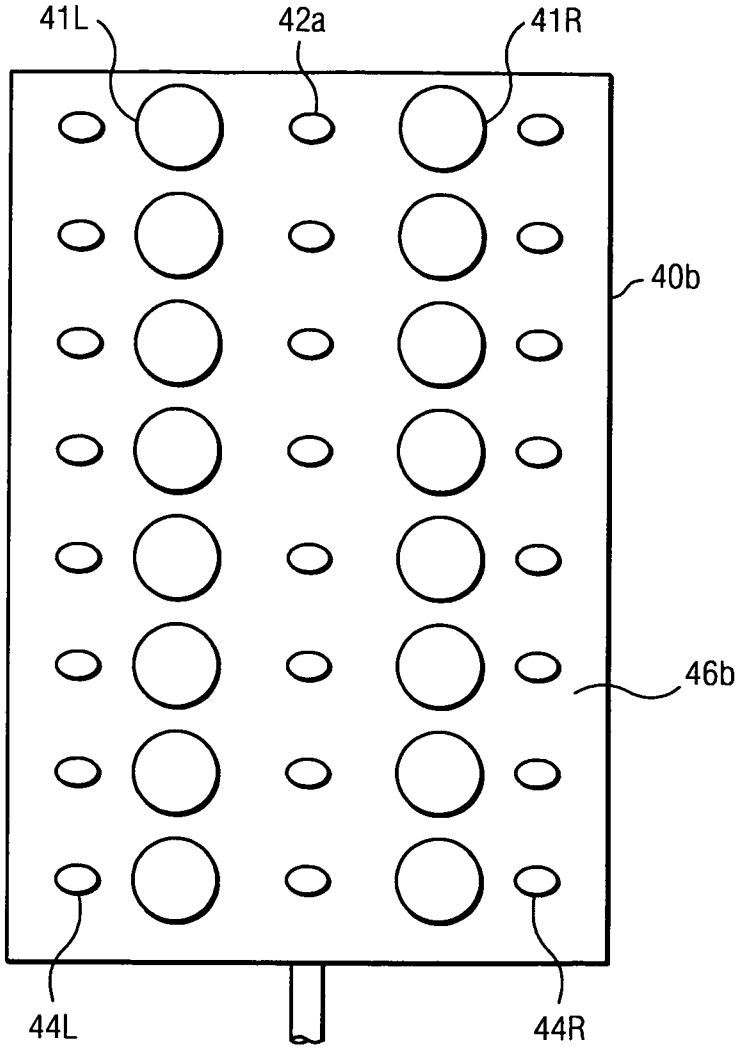

FIG. 9

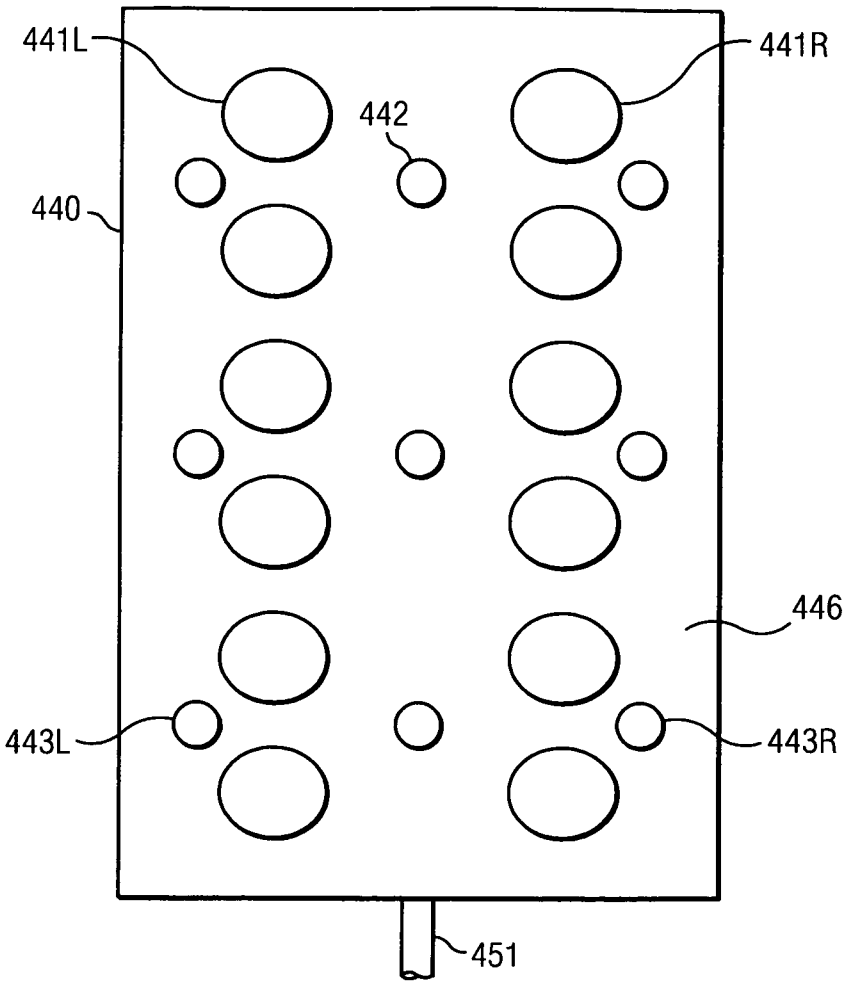

FIG. 10

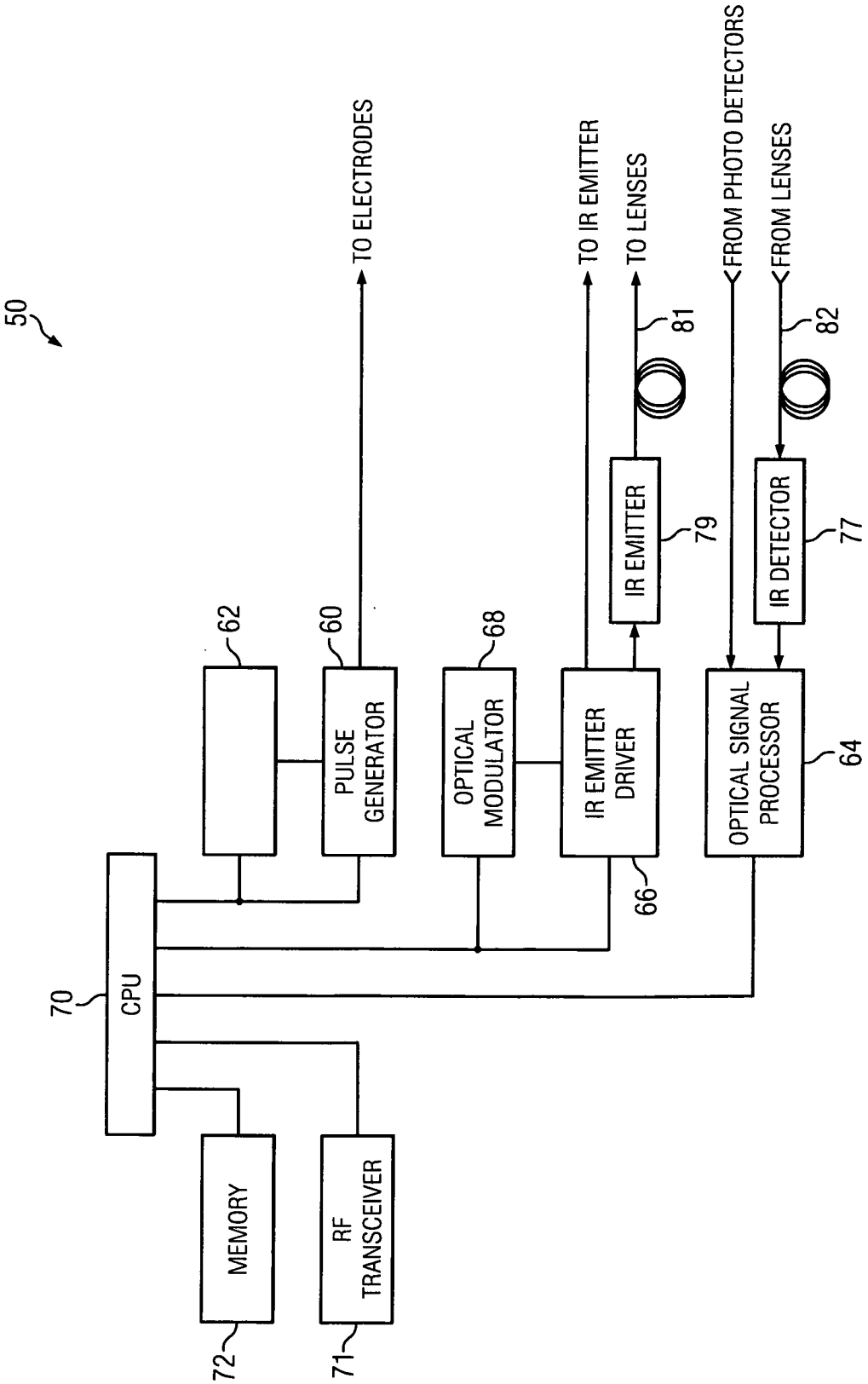
50
TO ELECTRODES
TO IR EMITTER
TO LENSES
FROM PHOTO DETECTORS
FROM LENSES
81
82
62
60
68
IR EMITTER
79
IR DETECTOR
77
PULSE GENERATOR
OPTICAL MODULATOR
IR EMITTER DRIVER
OPTICAL SIGNAL PROCESSOR
64
66
70
CPU
MEMORY
RF TRANSCEIVER
72
71

FIG. 11a

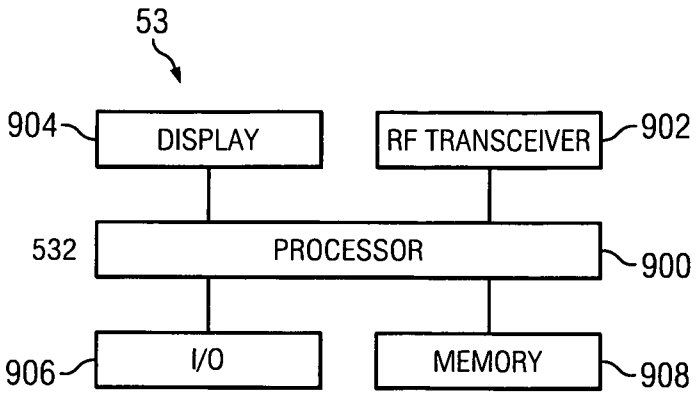

FIG. 11b

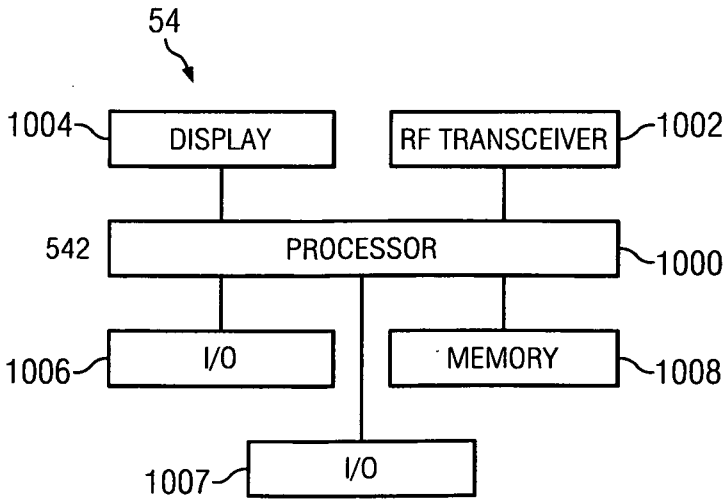

FIG. 11c

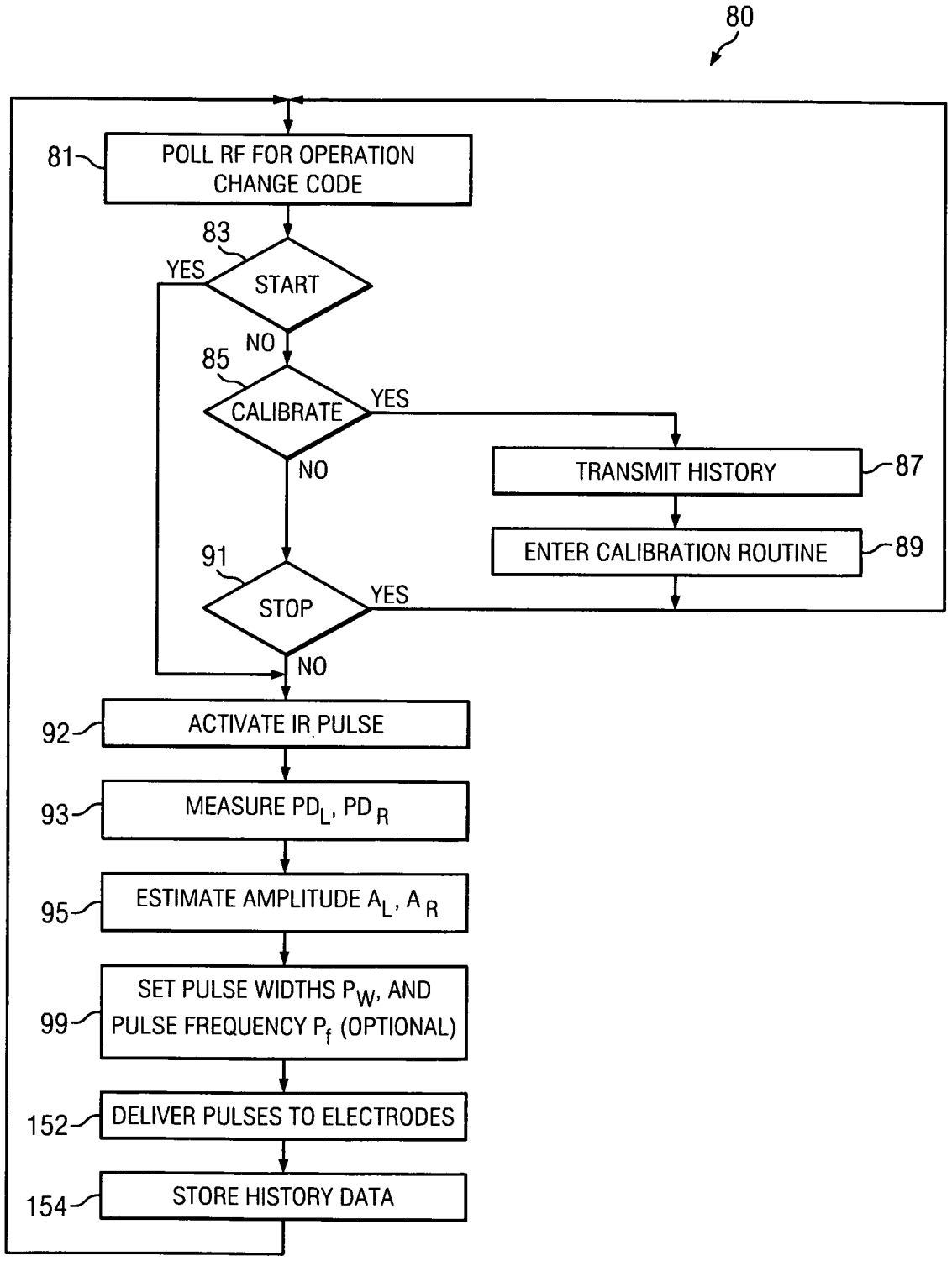
80
81
POLL RF FOR OPERATION CHANGE CODE
83
START
YES
NO
85
CALIBRATE
YES
NO
TRANSMIT HISTORY
87
ENTER CALIBRATION ROUTINE
89
91
STOP
YES
NO
92
ACTIVATE IR PULSE
93
MEASURE PD_L, PD_R
95
ESTIMATE AMPLITUDE A_L, A_R
99
SET PULSE WIDTHS P_W, AND PULSE FREQUENCY P_f (OPTIONAL)
152
DELIVER PULSES TO ELECTRODES
154
STORE HISTORY DATA

FIG. 12a

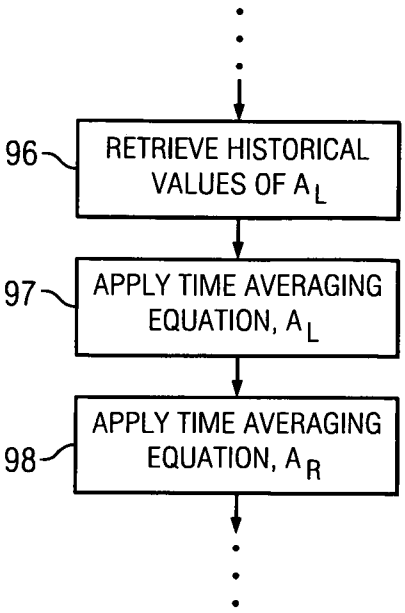

FIG. 12b

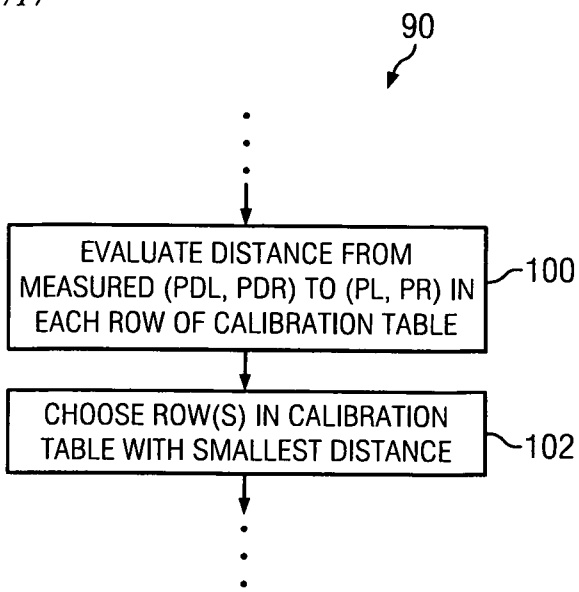

FIG. 12c

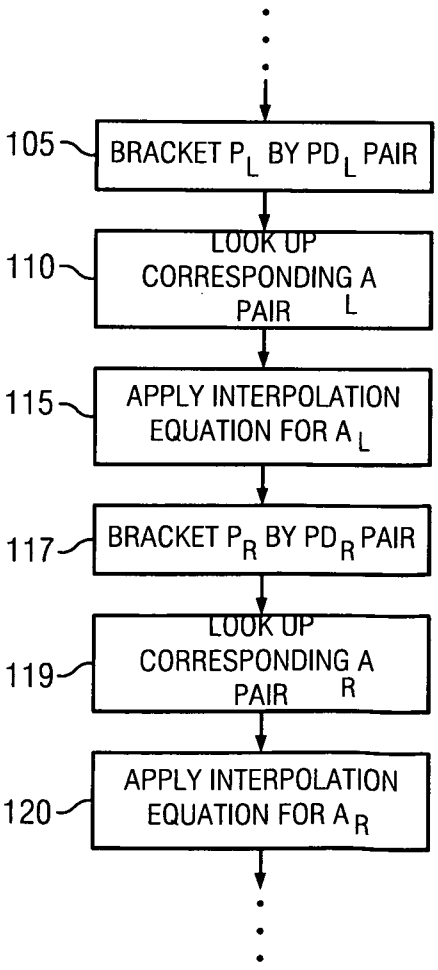

FIG. 12d

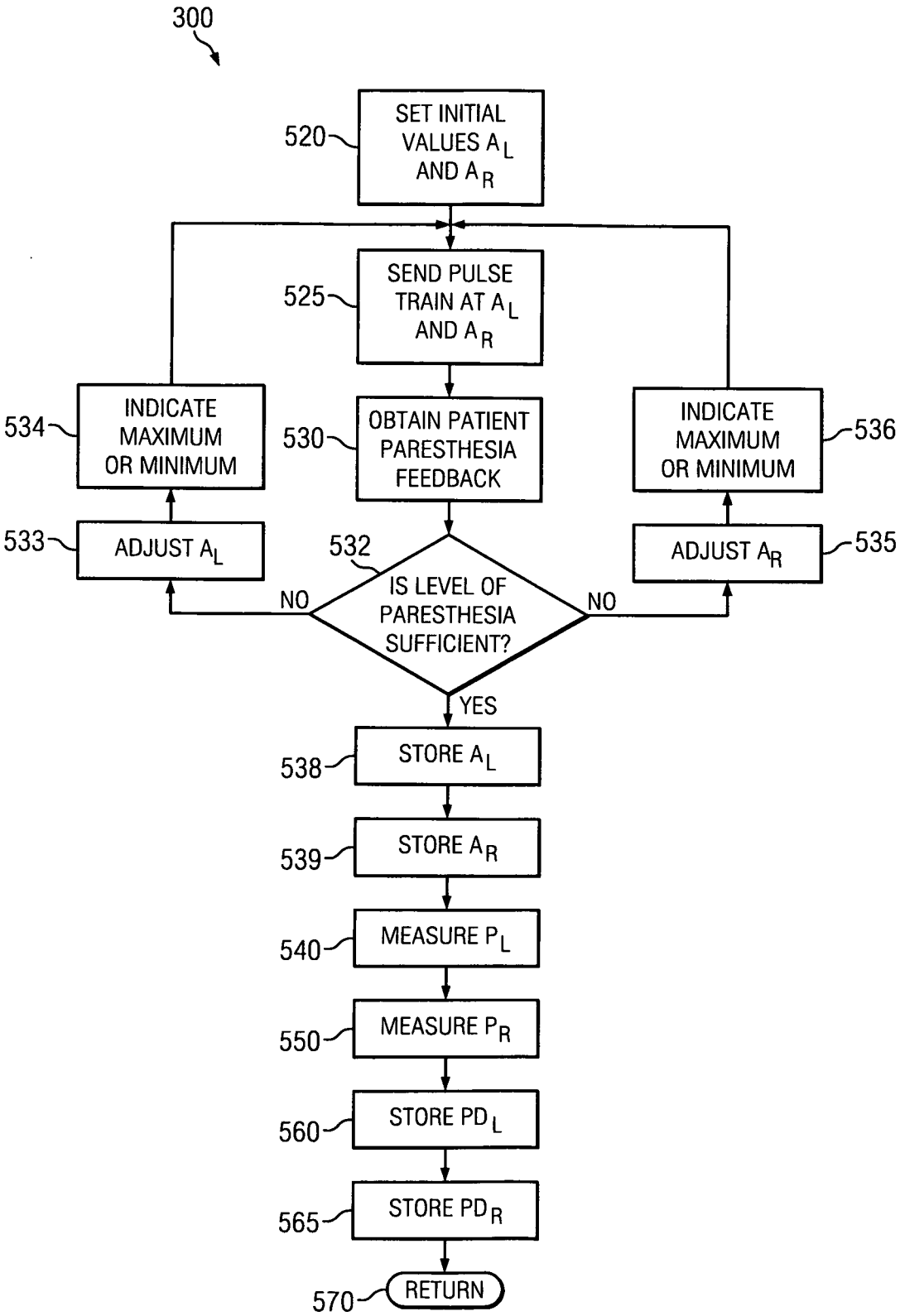
300
520
SET INITIAL VALUES A_L AND A_R
525
SEND PULSE TRAIN AT A_L AND A_R
530
OBTAIN PATIENT PARESTHESIA FEEDBACK
532
IS LEVEL OF PARESTHESIA SUFFICIENT?
NO
YES
533
ADJUST A_L
534
INDICATE MAXIMUM OR MINIMUM
NO
535
ADJUST A_R
536
INDICATE MAXIMUM OR MINIMUM
538
STORE A_L
539
STORE A_R
540
MEASURE P_L
550
MEASURE P_R
560
STORE PD_L
565
STORE PD_R
570
RETURN

FIG. 13a

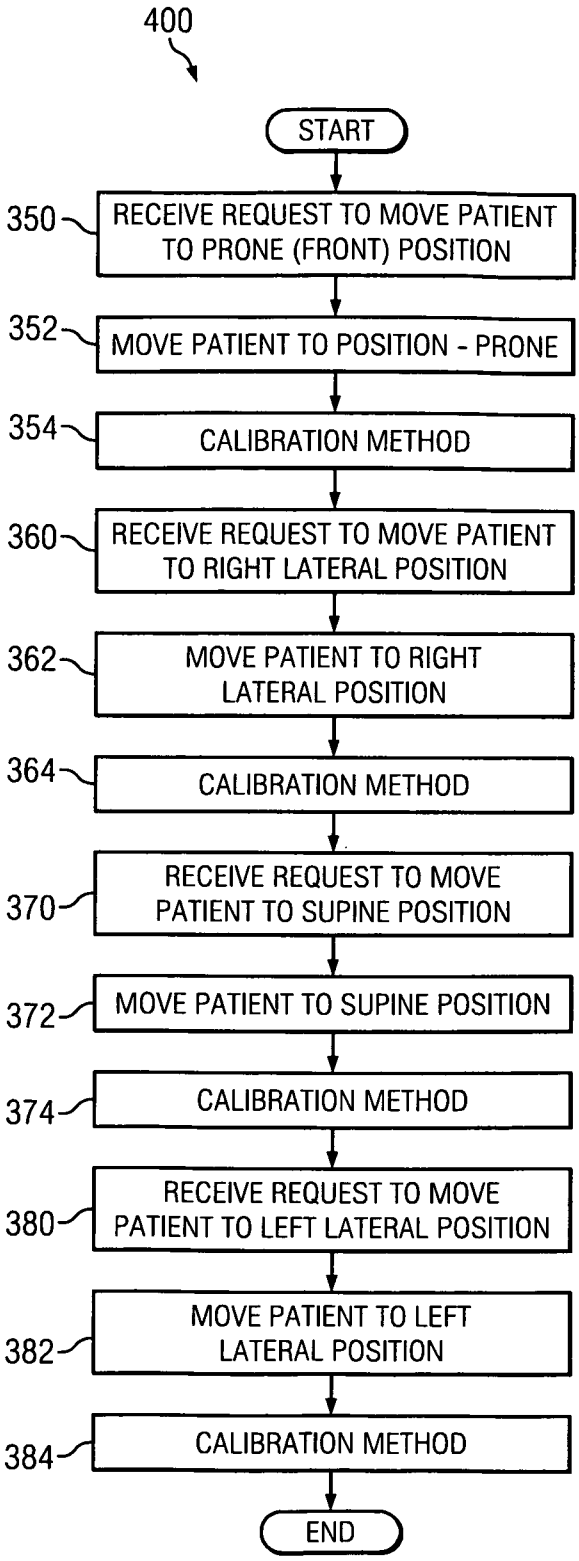
400
START
350
RECEIVE REQUEST TO MOVE PATIENT TO PRONE (FRONT) POSITION
352
MOVE PATIENT TO POSITION - PRONE
354
CALIBRATION METHOD
360
RECEIVE REQUEST TO MOVE PATIENT TO RIGHT LATERAL POSITION
362
MOVE PATIENT TO RIGHT LATERAL POSITION
364
CALIBRATION METHOD
370
RECEIVE REQUEST TO MOVE PATIENT TO SUPINE POSITION
372
MOVE PATIENT TO SUPINE POSITION
374
CALIBRATION METHOD
380
RECEIVE REQUEST TO MOVE PATIENT TO LEFT LATERAL POSITION
382
MOVE PATIENT TO LEFT LATERAL POSITION
384
CALIBRATION METHOD
END

FIG. 13b

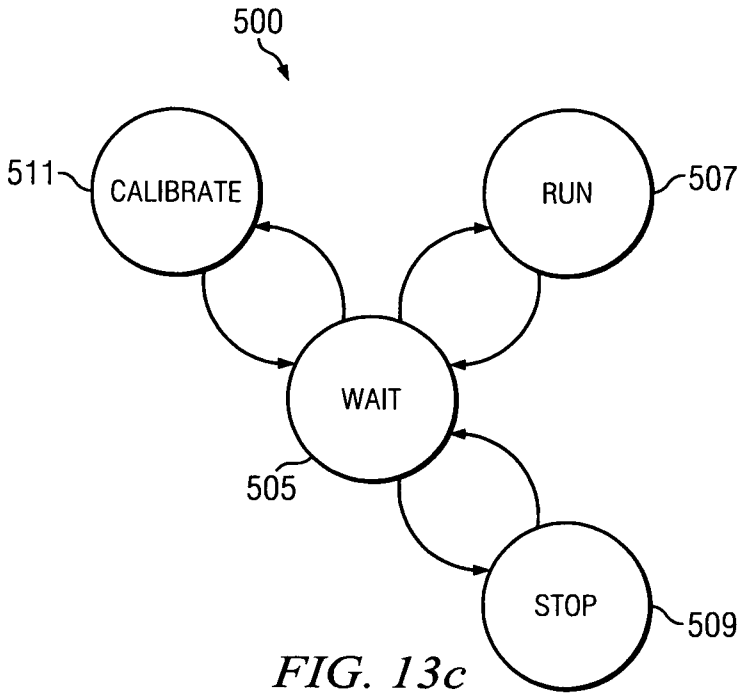

FIG. 13c

1150

1152 PATIENT POSITION	1154 PHOTO-DETECTOR PD_L	1156 PHOTO-DETECTOR PD_R	1158 LEFT PULSE AMPLITUDE	1160 RIGHT PULSE AMPLITUDE	1161 PULSE WIDTH	1162 PULSE FREQUENCY
1 (FRONT) 0°	PD_{L1}	PD_{R1}	AL_1	A_{R1}	P_{W1}	P_{f1}
2 (RIGHT) 90°	PD_{L2}	PD_{R2}	AL_2	A_{R2}	P_{W2}	P_{f2}
3 (BACK) 180°	PD_{L3}	PD_{R3}	AL_3	A_{R3}	P_{W3}	P_{f3}
4 (LEFT) 270°	PD_{L4}	PD_{R4}	AL_4	A_{R4}	P_{W4}	P_{f4}

FIG. 14

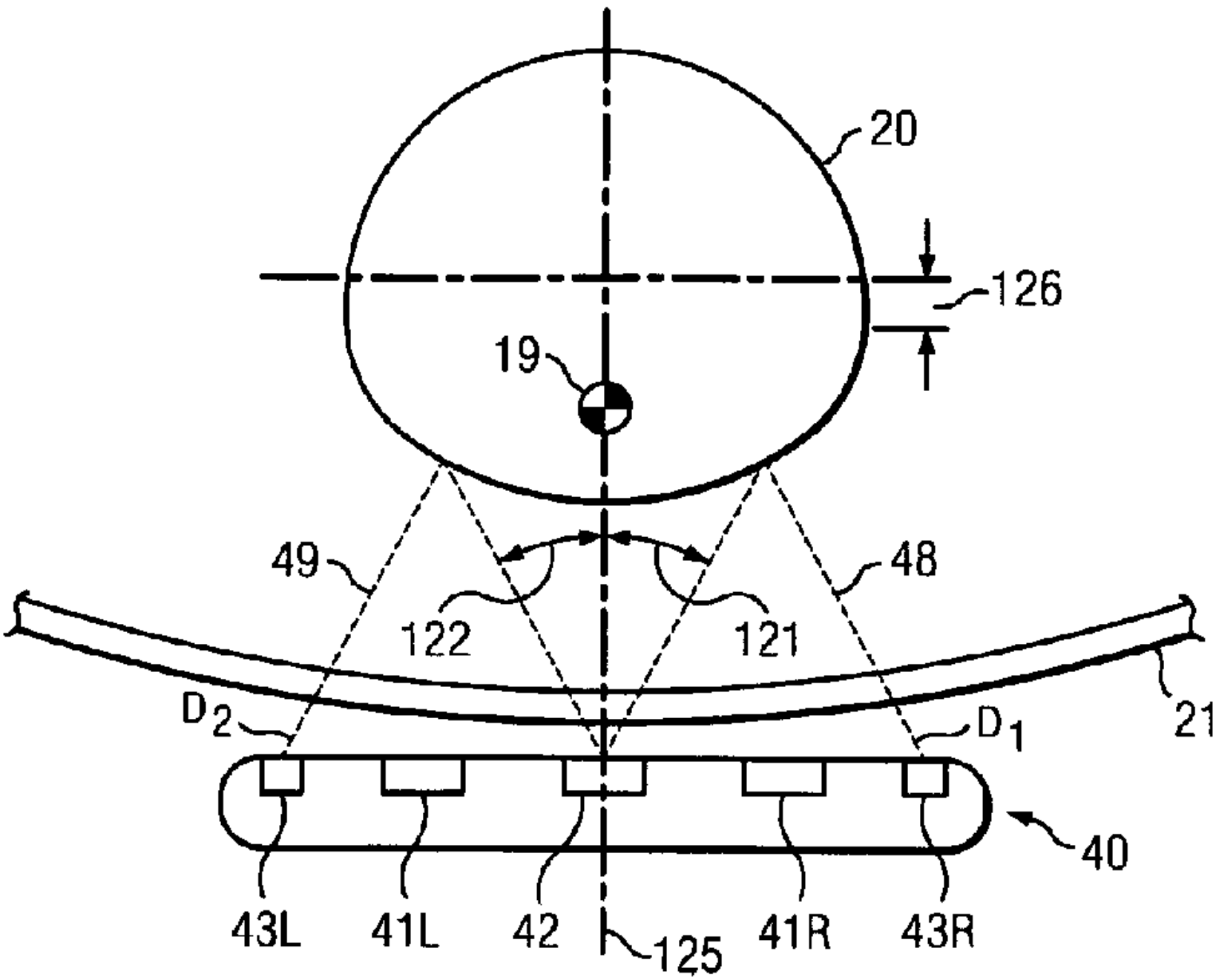

FRONT, 0°