(12) INTERNATIONAL APPLICATION PUBLISHED UNDER THE PATENT COOPERATION TREATY (PCT)

(19) World Intellectual Property Organization
International Bureau

(43) International Publication Date
12 April 2018 (12.04.2018)

WIPO | PCT

(10) International Publication Number
WO 2018/065477 A1

(51) International Patent Classification:
B60R 21/235 (2006.01)

(21) International Application Number:
PCT/EP2017/075241

(22) International Filing Date:
04 October 2017 (04.10.2017)

(25) Filing Language: English

(26) Publication Language: English

(30) Priority Data:
16192871.8 07 October 2016 (07.10.2016) EP

(71) Applicant *(for all designated States except US)*: **AUTOLIV DEVELOPMENT AB** [SE/SE]; WALLENTINSVÄGEN 22, 44783 VÅRGÅRDA (SE).

(72) Inventors; and

(71) Applicants *(for US only)*: **STOW, David** [GB/SE]; Blacktjärnsgatan 12B, 41678 Göteborg (SE). **FINN, Hugh** [GB/GB]; 26 Bowden Close, Culcheth, Warrington WA3 4LG (GB).

(81) Designated States *(unless otherwise indicated, for every kind of national protection available)*: AE, AG, AL, AM, AO, AT, AU, AZ, BA, BB, BG, BH, BN, BR, BW, BY, BZ, CA, CH, CL, CN, CO, CR, CU, CZ, DE, DJ, DK, DM, DO, DZ, EC, EE, EG, ES, FI, GB, GD, GE, GH, GM, GT, HN, HR, HU, ID, IL, IN, IR, IS, JO, JP, KE, KG, KH, KN, KP, KR, KW, KZ, LA, LC, LK, LR, LS, LU, LY, MA, MD, ME, MG, MK, MN, MW, MX, MY, MZ, NA, NG, NI, NO, NZ, OM, PA, PE, PG, PH, PL, PT, QA, RO, RS, RU, RW, SA, SC, SD, SE, SG, SK, SL, SM, ST, SV, SY, TH, TJ, TM, TN, TR, TT, TZ, UA, UG, US, UZ, VC, VN, ZA, ZM, ZW.

(84) Designated States *(unless otherwise indicated, for every kind of regional protection available)*: ARIPO (BW, GH, GM, KE, LR, LS, MW, MZ, NA, RW, SD, SL, ST, SZ, TZ, UG, ZM, ZW), Eurasian (AM, AZ, BY, KG, KZ, RU, TJ, TM), European (AL, AT, BE, BG, CH, CY, CZ, DE, DK, EE, ES, FI, FR, GB, GR, HR, HU, IE, IS, IT, LT, LU, LV, MC, MK, MT, NL, NO, PL, PT, RO, RS, SE, SI, SK, SM, TR), OAPI (BF, BJ, CF, CG, CI, CM, GA, GN, GQ, GW, KM, ML, MR, NE, SN, TD, TG).

Published:
— *with international search report (Art. 21(3))*

(54) Title: AN AIR-BAG

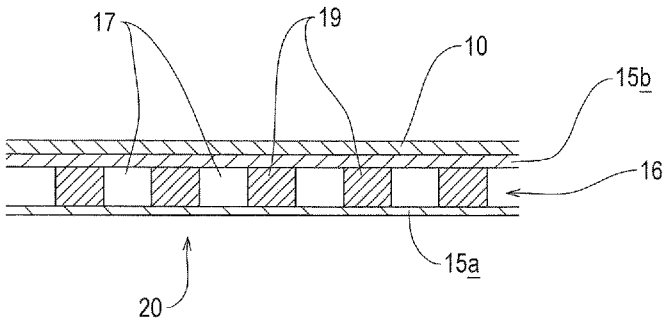

Figure 4

(57) Abstract: An air-bag (1) for use in a vehicle, the air-bag (1) comprising a fabric layer (10) comprising a plurality of interwoven warp and weft yarns; an additional layer (15a) which is at least partly superimposed on a part of the fabric layer (10); and an intermediate layer (16) which is at least partly positioned between the fabric layer (10) and the additional layer (15a), the intermediate layer (16) comprising a mesh structure which is provided with a plurality of cells (17), wherein the cells (17) contain a matter having a lower thermal conductivity than the warp and weft yarns of the fabric layer (10).

WO 2018/065477 A1

Title: An air-bag

Description of Invention

The present invention relates to an air-bag for use in a vehicle and a method of manufacturing an air-bag for a vehicle. The invention more particularly relates to a reinforcement arrangement for an air-bag to protect the air-bag from high temperature gasses.

Referring to figure 1 of the accompanying drawings, a conventional air-bag 1 comprises two superimposed fabric layers 2 (only one of which is visible in figure 1). The air-bag 1 comprises an inlet 3 which is coupled to a gas generator 4. The gas generator 4, upon activation, outputs gas which passes through the inlet 3 and into a chamber 5 between the layers of fabric 2 of the air-bag 1. The pressure of gas inflates the air-bag 1.

A throat portion 6 of the air-bag 1 is a portion of the air-bag 1 which is positioned at or adjacent to the inlet 3 and which is subject to high temperatures from gas generated by the gas generator 4.

A reinforcement arrangement is usually provided at the throat portion 6 of the air-bag 1 to protect the throat portion 6 from the high temperature gas from the gas generator 4. The reinforcement arrangement is typically in the form of a gas guide 7 which is mounted within the air-bag 1 to protect the throat portion 6. The gas guide 7 is typically a Y-sock but can be any other type of gas guide, such as an H-sock or a tube.

Referring now to figure 2 of the accompanying drawings, the gas guide 7 comprises a plurality of coated layers 8 which are superimposed and fixed to one another. The layers 8 of the gas guide 7 cover the inner face of the throat portion 6 of the air-bag 1 to protect the layers of fabric 2 of the air-bag 1 from

the high temperature gases from the gas generator 4. A conventional gas guide may comprise as many as eleven or more layers of coated fabric.

A conventional air-bag may also be provided with a plastic or metal reinforcement element (not shown)which is provided in conjunction with the gas guide 7 to provide additional protection from the high temperature gases from the gas generator 4.

The conventional throat reinforcement arrangements described above are effective in protecting the fabric at a throat portion of an air-bag. However, the high number of coated reinforcing layers in the gas guide and/or the plastic or metal reinforcement element undesirably add weight to the air-bag and can result in the air-bag being overly rigid and difficult to fold.

The present invention seeks to provide an improved air-bag.

According to one aspect of the present invention, there is provided an air-bag for use in a vehicle, the air-bag comprising: a fabric layer comprising a plurality of interwoven warp and weft yarns; an additional layer which is at least partly superimposed on a part of the fabric layer; and an intermediate layer which is at least partly positioned between the fabric layer and the additional layer, the intermediate layer comprising a mesh structure which is provided with a plurality of cells, wherein the cells contain a matter having a lower thermal conductivity than the warp and weft yarns of the fabric layer.

Preferably, the thermal conductivity of the matter contained within the cells is between 0.02 and 0.03 Wm-1K-1.

Conveniently, the matter contained within the cells is air.

Advantageously, the cells are open ended chambers formed in the mesh structure of the intermediate layer.

In one embodiment, the mesh structure of the intermediate layer is a woven structure.

In another embodiment, the mesh structure of the intermediate layer is a knitted structure.

Preferably, the density of the warp and weft yarns of the intermediate layer is 22 threads/cm in the warp direction and 90 threads/cm in the weft direction.

Conveniently, the mesh structure of the intermediate layer comprises at least one material selected from a group including Nylon, aramid, polycarbonate, basalt and Nomex™.

In one embodiment, the mesh structure of the intermediate layer is of extruded plastic.

Preferably, the air-bag further comprises a further additional layer which is at least partly positioned between the intermediate layer and the fabric layer.

Conveniently, the intermediate layer is fixed to the additional layer and the further additional layer to form a reinforcement arrangement which is at least partly superimposed on the fabric layer.

Advantageously, the largest width of each of the cells of the intermediate layer is between 3mm and 20mm.

Preferably, the gas permeability of the intermediate layer is substantially five times greater than the gas permeability of the fabric layer.

According to another aspect of the present invention, there is provided a reinforcement arrangement for a vehicle air-bag, the arrangement comprising

an intermediate layer which is at least partly positioned between an additional layer and a further additional layer, the intermediate layer comprising a mesh structure which is provided with a plurality of cells, wherein the cells contain a matter having a lower thermal conductivity than the warp and weft yarns of a fabric layer of an air-bag.

According to a further aspect of the present invention, there is provided a method of manufacturing an air-bag for use in a vehicle, the method comprising: providing a fabric layer comprising a plurality of interwoven warp and weft yarns; providing a reinforcement arrangement by positioning an intermediate layer at least partly between an additional layer and a further additional layer, the intermediate layer comprising a mesh structure which is provided with a plurality of cells, wherein the cells contain a matter having a lower thermal conductivity than the warp and weft yarns of the fabric layer; and superimposing the reinforcement arrangement on at least part of the fabric layer to protect the fabric layer from heat.

So that the present invention may be more readily understood, embodiments of the present invention will now be described, by way of example, with reference to the accompanying drawings, in which:

Figure 1 is a diagrammatic view of a conventional air-bag with a gas guide,

Figure 2 is a diagrammatic cross-sectional view of part of the gas guide and a throat portion of the air-bag of figure 1,

Figure 3 is a diagrammatic view of an air-bag of an embodiment of the invention,

Figure 4 is a diagrammatic cross-sectional view of part of an air-bag of an embodiment of the invention,

Figure 5 is a diagrammatic plan view of part of an intermediate layer of the air-bag of figure 4,

Figure 6 is a diagrammatic plan view of part of an intermediate layer of an air-bag of a further embodiment of the invention,

Figure 7 is a diagrammatic perspective view of a reinforcement arrangement of an embodiment of the invention, and

Figure 8 is a diagrammatic cross-sectional view of the reinforcement arrangement of figure 7.

Referring now to figure 3 of the accompanying drawings, an air-bag 9 of an embodiment of the invention comprises two superimposed fabric layers 10 (only one of which is visible in figure 3). The layers of fabric 10 are typically integrated with one another and manufactured using a one piece weaving technique. The fabric layers 10 comprise a plurality of interwoven warp and weft yarns.

The air-bag of an embodiment of the invention may be a front air-bag, a side air-bag, a curtain air-bag, a pedestrian protecting air-bag or any other type of vehicle air-bag.

The air-bag 9 comprises an inlet 11 which is configured to be coupled fluidly to a gas generator 12, as shown in figure 3. The gas generator 12, upon activation, injects gas into the air-bag 9 via the inlet 11 to inflate an internal chamber 13 between the layers of fabric 10.

A throat portion 14 of the air-bag 9 is a portion of the air-bag 9 which is positioned at or adjacent to the inlet 11 and which is subject to high temperatures from gas generated by the gas generator 12. For instance, in one embodiment the throat portion 14 is a portion of the air-bag 9 which is

positioned immediately adjacent to the inlet 11 such that gas output from the gas generator 12 acts directly on the throat portion 14 as the air-bag inflates.

Referring now to figure 4 of the accompanying drawings, the air-bag 9 comprises a reinforcement arrangement incorporating an additional layer 15a which is at least partly superimposed on a part of a fabric layer 10 of the air-bag 9. In this embodiment, the additional layer 15a is at least partly superimposed on a part of the fabric layer 10 of the air-bag 9 at the throat portion of the air-bag 9. In other embodiments, the additional layer 15a is superimposed on a different portion of the fabric of the air-bag 9 which requires reinforcement from high temperatures.

The air-bag 9 further comprises an intermediate layer 16 which is at least partly positioned between the fabric layer 10 and the additional layer 15a. In this embodiment, the intermediate layer 16 is at least partly positioned between the additional layer 15a and a further additional layer 15b. The further additional layer 15b is preferably fixed to an inside face of the fabric layer 10 of the air-bag 9.

The intermediate layer 16 is fixed to both the additional layer 15a and the further additional layer 15b by a fixing means, such as adhesive and/or stitching to form a three layer reinforcement which is at least partly superimposed on the fabric layer 10. In some embodiments, the three layer reinforcement formed by the additional layers 15a, 15b and the intermediate layer 16 is a gas guide which is, for instance, a Y-sock, an H-sock, a tube or any other kind of gas guide.

Referring now to figure 5 of the accompanying drawings, the intermediate layer 16 comprises a mesh structure which is provided with a plurality of cells 17. In this embodiment, the intermediate layer 16 is a woven structure formed from a plurality of loosely interwoven warp yarns 18 and weft yarns 19. The

spaces between the loosely woven warp and weft yarns 18, 19 form the cells 17 of the intermediate layer 16.

In this embodiment, the largest width or diameter of each of the cells 17 is equal to or substantially equal to 11mm. In other embodiments the largest width or diameter of each of the cells 17 is between 3mm and 20mm.

In this embodiment, the density of the warp and weft yarns 18, 19 of the intermediate layer 16 is 22 threads/cm in the warp direction and 90 threads/cm in the weft direction.

In this embodiment, the gas permeability of the intermediate layer 16 is substantially five times greater than the gas permeability of the fabric layer 10 of the air-bag 9.

In this embodiment, the intermediate layer 16 is of Nylon. However, in other embodiments, the intermediate layer 16 comprises at least one material selected from a group including Nylon, aramid, polycarbonate, basalt and Nomex™.

In this embodiment, the intermediate layer 16 is a woven structure. However, in another embodiment, the intermediate layer 16 is a knitted structure. The knitted structure comprises a set of connected loops from a series of yarns in a weft or warp direction. The knitted structure is loose and the spaces between the yarns form a plurality of cells that are equivalent to the cells 17 of the embodiment described above.

In an embodiment of the invention, the plurality of cells 17 provided in the mesh structure of the intermediate layer 16 contains a matter having a lower thermal conductivity than the warp or weft yarns of the fabric layer 10 of the air-bag 9. In this embodiment, the matter contained within the plurality of cells 17 is air. At ground level, air has a thermal conductivity of 0.024 $Wm^{-1}K^{-1}$.

The matter, which in this embodiment is air, is at least partly trapped within the cells 17 in the intermediate layer by the additional layers 15a, 15b. The additional layers 15a, 15b effectively close the open ends of each of the cells 17 in the intermediate layer 16 to provide discrete chambers within the intermediate layer 16.

In another embodiment, the thermal conductivity of the matter contained within the cells 17 is between 0.02 and 0.03 $Wm^{-1}K^{-1}$.

The air or other matter contained within the cells 17 of the intermediate layer 16 provides a thermal barrier which shields the fabric layer 10 of the air-bag 9 from heat from gas generated by the gas generator 12. In this embodiment, the additional layer 15a is superimposed on the fabric layer 10 on the inside of the air-bag 9 such that the structure of the additional layer 15a, the intermediate layer 16 and the further additional layer 15b shield the fabric layer 10 of the air-bag 9 from high temperature gases exerted towards the fabric layer 10 in the direction indicated generally by arrow 20 in figure 4.

The air trapped within the cells 17 in the intermediate layer 16 provides an effective thermal barrier which protects the fabric layer 10 of the air-bag 9. The structure formed by the additional layers 15a, 15b and the intermediate layer 16 reinforces the fabric layer 10 by protecting the fabric layer 10 from high temperatures from the gas output from the gas generator 12. The air within the cells 17 has a thermal conductivity of around 0.024 $Wm^{-1}K^{-1}$ which is significantly lower than the thermal conductivity of the warp and weft yarns of the layer of fabric 10. For instance, if the fabric layer 10 is of Nylon, the yarns would have a thermal conductivity of approximately 0.2 $Wm^{-1}K^{-1}$.

The warp and weft yarns 18, 19 of the intermediate layer 16 contact the additional layers 15a, 15b and would provide some thermal conductivity between the additional layers 15a, 15b which is conducted to the fabric layer

10. However, the air-filled cells 17 between the warp and weft yarns 18, 19 of the intermediate layer 16 provide regions of low thermal conductivity such that the overall thermal conductivity across the intermediate layer 16 is significantly lower than the thermal conductivity of the fabric 10 of the air-bag 9.

In other embodiments, the further additional layer 15b is omitted and the intermediate layer 16 is fixed to the fabric layer 10 of the air-bag 9. The fabric layer 10 closes the cells 17 in the intermediate layer such that the matter within the cells provides a thermal barrier which protects the fabric layer 10 from heat from gas from the gas generator 12.

The intermediate layer 16 and the additional layers 15a, 15b provide an effective reinforcing structure which protects the fabric layer 10 from high temperatures. This effective reinforcement minimises or avoids the need to provide a high number of additional layers of fabric to reinforce the fabric layer 10, such as the multiple layers described above in a conventional gas guide. An embodiment of the invention is therefore lighter in weight and more flexible than a conventional air-bag where reinforcement is provided by a gas guide having many superimposed fabric layers and/or a plastic or metal reinforcement element.

The reduced number of reinforcing layers in an embodiment of the invention reduces the complexity and cost of manufacturing the air-bag as compared with a conventional air-bag that uses a gas guide having a large number of superimposed fabric layers and/or a plastic or metal reinforcement element.

Referring now to figure 6 of the accompanying drawings, an air-bag of a further embodiment of the invention is identical to the air-bag 9 of the embodiment described above, except that the intermediate layer 16 is of plastic. In this embodiment, the intermediate layer 16 is an extruded polymer structure.

The intermediate layer 16 comprises a plastic mesh structure 22 with spaces provided in the mesh structure 22 that form the cells 17 in the intermediate structure 16. The relatively poor thermal conductivity of the matter contained within the cells 17 of the intermediate layer 16 of this further embodiment enable the intermediate layer 16 to provide an effective thermal barrier in the same way as the intermediate layer 16 in the embodiments described above.

In this embodiment, the thickness of the mesh structure 22 is equal to or substantially equal to 0.2 mm.

In this embodiment, the largest width or diameter of each of the cells 17 is equal to or substantially equal to 11mm. In other embodiments the largest width or diameter of each of the cells 17 is between 3mm and 20mm.

In this embodiment, the density of the mesh structure 22 of the intermediate layer 16 is 22 mesh/cm in a first direction and 90 mesh/cm in a second direction that is perpendicular to the first direction.

In this embodiment, the gas permeability of the mesh structure 22 is substantially five times greater than the gas permeability of the fabric layer 10 of the air-bag 9.

In the embodiments described above, the matter contained within the cells 17 in the intermediate layer 16 is air. However, in other embodiments, the cells 17 in the intermediate layer contain a different matter which has a lower thermal conductivity than the yarns of the fabric of the air-bag.

A method of manufacturing an air-bag of an embodiment comprises forming a reinforcement arrangement, such as a gas guide, by positioning the intermediate layer 16 at least partly between the additional layer 15a and the further additional layer 15b and fixing the layers 15a, 16 and 15b together. The method further comprises mounting the reinforcing arrangement within the

air-bag 9 to protect the fabric 10 of the air-bag 9 from heat from gas from the gas generator 12.

A method of one embodiment of the invention comprises weaving the intermediate layer 16 from a plurality of yarns. In another embodiment, the method comprises knitting the intermediate layer 16 from a plurality of yarns.

In a further embodiment, the method comprises extruding a polymer to form the mesh structure of the intermediate layer 16.

Referring now to figures 7 and 8 of the accompanying drawings, a reinforcement arrangement 23 of embodiments of the invention is in the form of a gas guide. The reinforcement arrangement 23 is configured to be fixed within an air-bag to reinforce a portion of the air-bag.

The reinforcement arrangement 23 comprises an outer layer 24, an intermediate layer 25 and an inner layer 26 which are respectively identical to the additional layer 15a, the intermediate layer 16 and the further additional layer 15b of the embodiments described above. The layers 24-26 of the reinforcement arrangement 23 are superimposed on one another and folded to form a generally cylindrical gas guide, as shown in figure 7. Opposing edges 27, 28 are stitched together by a thread 29 to provide a gas tight or substantially gas tight seal between the edges 27, 28.

In embodiments of the invention, the layers 24-26 of the reinforcement arrangement 23 may or may not be fixed to one another by other means besides the stitching of the threads 29. In further embodiments, the edges 27, 28 are fixed together by another means, such as adhesive.

The reinforcement arrangement 23 comprises a hollow, open ended central tube 30 which is configured to be coupled fluidly to the gas inlet of an air-bag so that gas produced by a gas generator flows through the central tube 30. The layers 24-26 of the reinforcement arrangement 23 protect the fabric of an

air-bag from the hot gases in the same manner as the embodiments described above.

A method of embodiments of the invention comprises manufacturing a reinforcement arrangement or gas guide, such as the reinforcement arrangement 23 described above. The method preferably also comprises mounting the reinforcement arrangement within an air-bag.

When used in this specification and the claims, the term "comprises" and "comprising" and variations thereof mean that specified features, steps or integers and included. The terms are not to be interpreted to exclude the presence of other features, steps or compounds.

The features disclosed in the foregoing description, or the following claims, or the accompanying drawings, expressed in their specific forms or in terms of a means for performing the disclosed function, or a method or process for attaining the disclosed result, as appropriate, may, separately, or in any combination of such features, be utilized for realising the invention in diverse forms thereof.

CLAIMS

1. An air-bag for use in a vehicle, the air-bag comprising:

a fabric layer (10) comprising a plurality of interwoven warp and weft yarns;

an additional layer (15a) which is at least partly superimposed on a part of the fabric layer (10); and

an intermediate layer (16) which is at least partly positioned between the fabric layer (10) and the additional layer (15a), the intermediate layer (16) comprising a mesh structure which is provided with a plurality of cells (17), wherein the cells (17) contain a matter having a lower thermal conductivity than the warp and weft yarns of the fabric layer (10).

2. The air-bag of claim 1, wherein the thermal conductivity of the matter contained within the cells (17) is between 0.02 and 0.03 $Wm^{-1}K^{-1}$.

3. The air-bag of claim 1 or claim 2, wherein the matter contained within the cells (17) is air.

4. The air-bag of any one of the preceding claims wherein the cells (17) are open ended chambers formed in the mesh structure of the intermediate layer (16).

5. The air-bag of any one of the preceding claims, wherein the mesh structure of the intermediate layer (16) is a woven structure.

6. The air-bag of any one of claims 1 to 4, wherein the mesh structure of the intermediate layer (16) is a knitted structure.

7. The air-bag of claim 5 or claim 6, wherein the density of the warp and weft yarns (18, 19) of the intermediate layer (16) is 22 threads/cm in the warp direction and 90 threads/cm in the weft direction.

8. The air-bag of any one of the preceding claims, wherein the mesh structure of the intermediate layer (16) comprises at least one material selected from a group including Nylon, aramid, polycarbonate, basalt and Nomex™.

9. The air-bag of any one of claims 1 to 4, wherein the mesh structure of the intermediate layer (16) is of extruded plastic.

10. The air-bag of any one of the preceding claims, wherein the air-bag further comprises a further additional layer (15b) which is at least partly positioned between the intermediate layer (16) and the fabric layer (10).

11. The air-bag of claim 10, wherein the intermediate layer (16) is fixed to the additional layer (15a) and the further additional layer (15b) to form a reinforcement arrangement which is at least partly superimposed on the fabric layer (10).

12. The air-bag of any one of the preceding claims, wherein the largest width of each of the cells (17) of the intermediate layer (16) is between 3mm and 20mm.

13. The air-bag of any one of the preceding claims, wherein the gas permeability of the intermediate layer (16) is substantially five times greater than the gas permeability of the fabric layer (10).

14. A reinforcement arrangement for a vehicle air-bag, the arrangement comprising an intermediate layer (16) which is at least partly positioned between an additional layer (15a) and a further additional layer (15b), the intermediate layer (16) comprising a mesh structure which is provided with a plurality of cells (17), wherein the cells (17) contain a matter having a lower

thermal conductivity than the warp and weft yarns of a fabric layer (10) of an air-bag.

15. A method of manufacturing an air-bag for use in a vehicle, the method comprising:

providing a fabric layer (10) comprising a plurality of interwoven warp and weft yarns;

providing a reinforcement arrangement by positioning an intermediate layer (16) at least partly between an additional layer (15a) and a further additional layer (15b), the intermediate layer (16) comprising a mesh structure which is provided with a plurality of cells (17), wherein the cells (17) contain a matter having a lower thermal conductivity than the warp and weft yarns of the fabric layer (10); and

superimposing the reinforcement arrangement on at least part of the fabric layer (10) to protect the fabric layer (10) from heat.

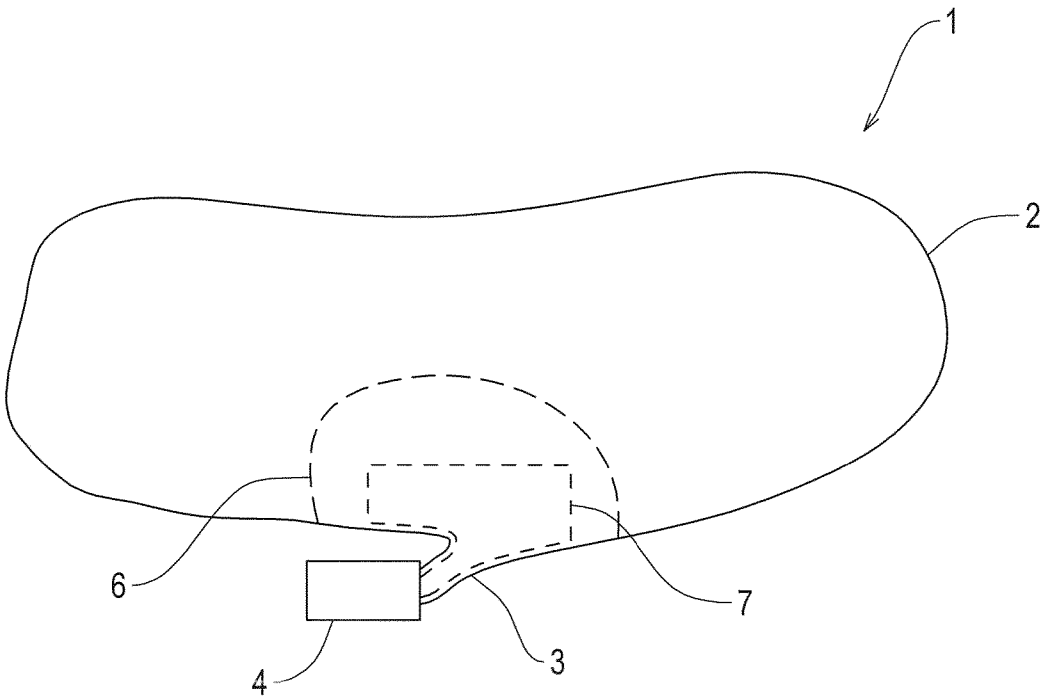

Figure 1
(PRIOR ART)

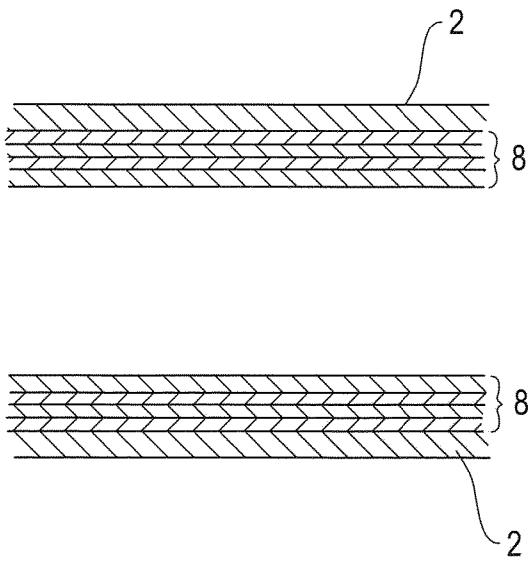

Figure 2
(PRIOR ART)

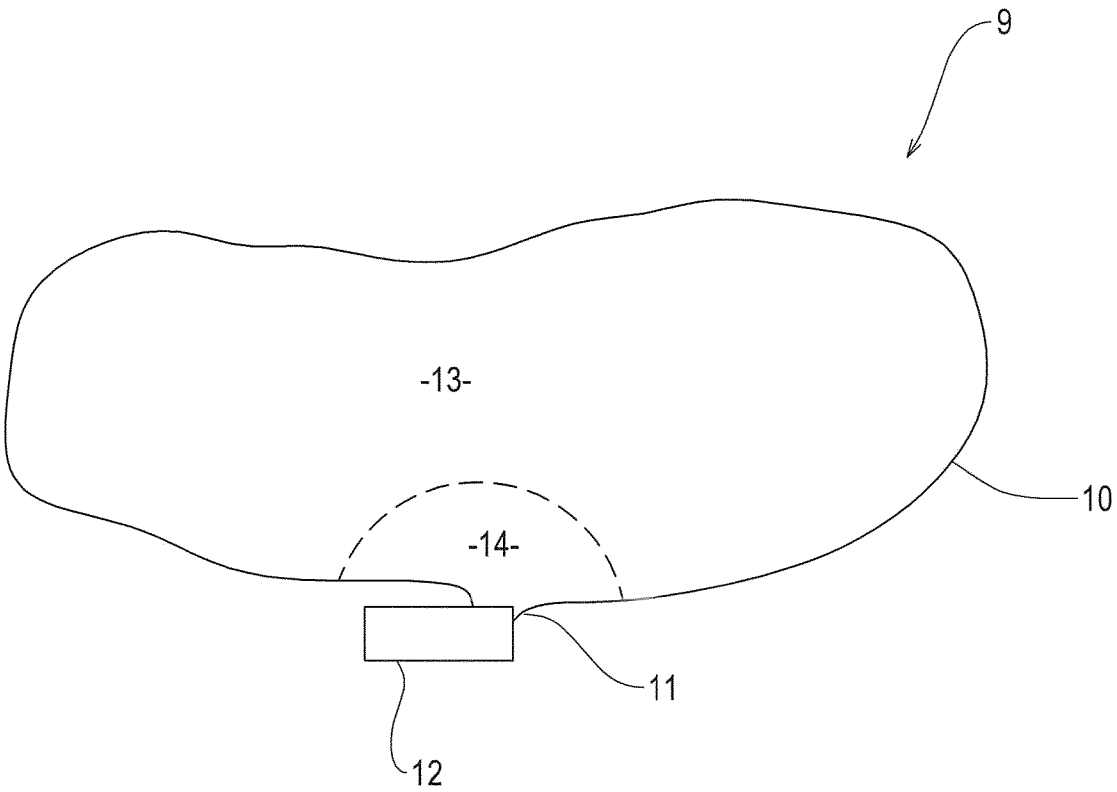

Figure 3

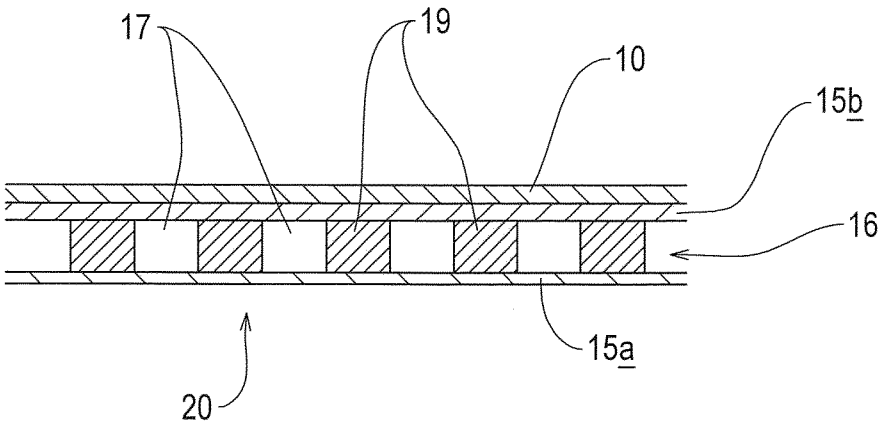

Figure 4

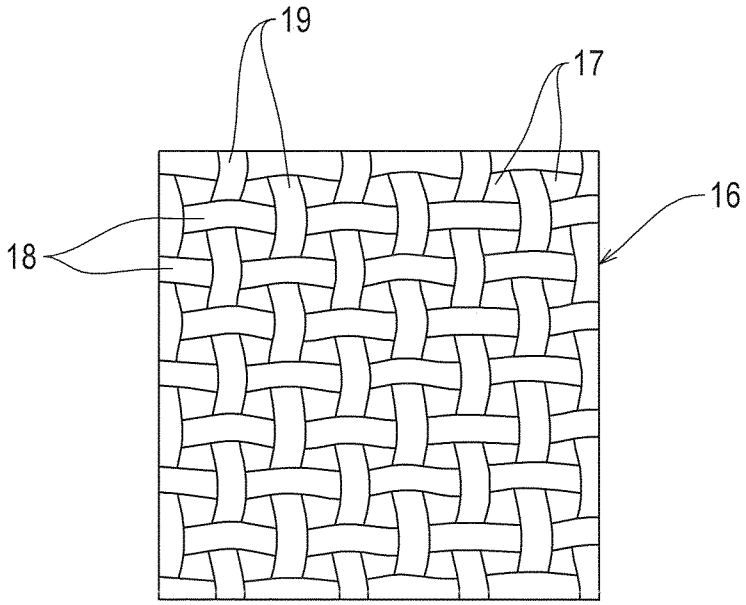

Figure 5

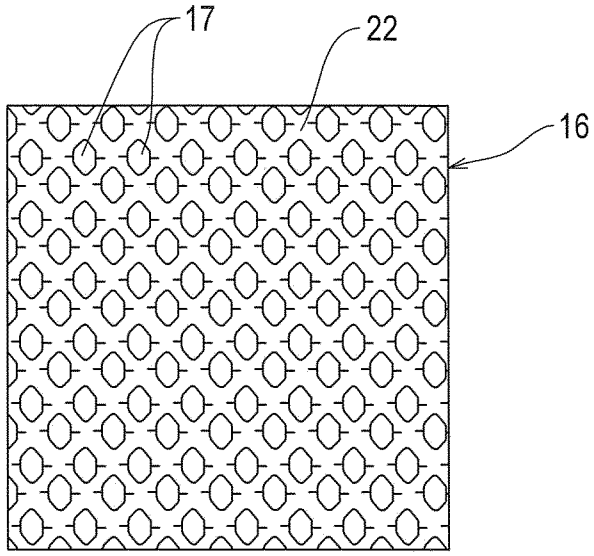

Figure 6

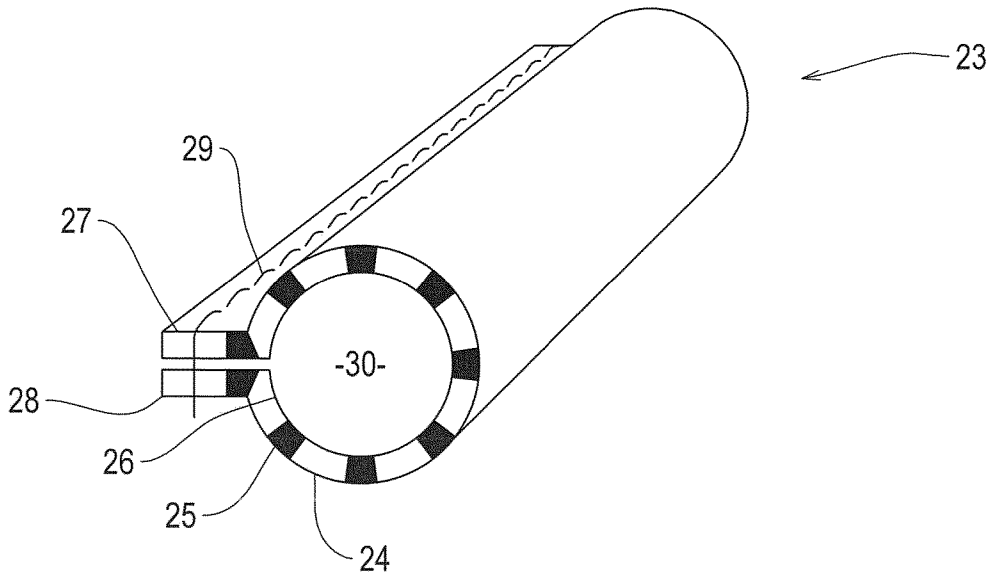

Figure 7

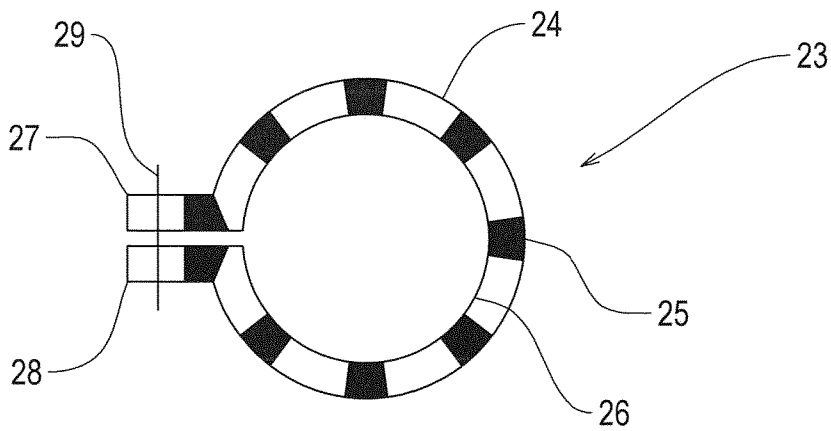

Figure 8

INTERNATIONAL SEARCH REPORT

International application No
PCT/EP2017/075241

A. CLASSIFICATION OF SUBJECT MATTER
INV. B60R21/235
ADD.

According to International Patent Classification (IPC) or to both national classification and IPC

B. FIELDS SEARCHED

Minimum documentation searched (classification system followed by classification symbols)
B60R

Documentation searched other than minimum documentation to the extent that such documents are included in the fields searched

Electronic data base consulted during the international search (name of data base and, where practicable, search terms used)
EPO-Internal

C. DOCUMENTS CONSIDERED TO BE RELEVANT

Category*	Citation of document, with indication, where appropriate, of the relevant passages	Relevant to claim No.
X A	WO 03/080402 A1 (AUTOLIV DEV [SE]; TAYLOR IAN [GB]) 2 October 2003 (2003-10-02) page 3, line 10 - page 5, line 20; figures 1-4 -----	1-12,14, 15 13

☐ Further documents are listed in the continuation of Box C.

☒ See patent family annex.

* Special categories of cited documents :

"A" document defining the general state of the art which is not considered to be of particular relevance

"E" earlier application or patent but published on or after the international filing date

"L" document which may throw doubts on priority claim(s) or which is cited to establish the publication date of another citation or other special reason (as specified)

"O" document referring to an oral disclosure, use, exhibition or other means

"P" document published prior to the international filing date but later than the priority date claimed

"T" later document published after the international filing date or priority date and not in conflict with the application but cited to understand the principle or theory underlying the invention

"X" document of particular relevance; the claimed invention cannot be considered novel or cannot be considered to involve an inventive step when the document is taken alone

"Y" document of particular relevance; the claimed invention cannot be considered to involve an inventive step when the document is combined with one or more other such documents, such combination being obvious to a person skilled in the art

"&" document member of the same patent family

Date of the actual completion of the international search	Date of mailing of the international search report
16 October 2017	23/10/2017

Name and mailing address of the ISA/	Authorized officer
European Patent Office, P.B. 5818 Patentlaan 2 NL - 2280 HV Rijswijk Tel. (+31-70) 340-2040, Fax: (+31-70) 340-3016	Cãlãmar, George

1

INTERNATIONAL SEARCH REPORT

Information on patent family members

International application No
PCT/EP2017/075241

Patent document cited in search report	Publication date	Patent family member(s)	Publication date
WO 03080402 A1	02-10-2003	AU 2003214742 A1	08-10-2003
		DE 10392409 B4	13-07-2006
		DE 10392409 T5	30-06-2005
		GB 2386870 A	01-10-2003
		WO 03080402 A1	02-10-2003