Feb. 25, 1969 E. M. TINGLEY 3,430,023

DOOR CONSTRUCTION AND VENTILATING SYSTEM FOR MICROWAVE OVEN

Filed Sept. 11, 1967 Sheet 1 of 3

FIG. 6

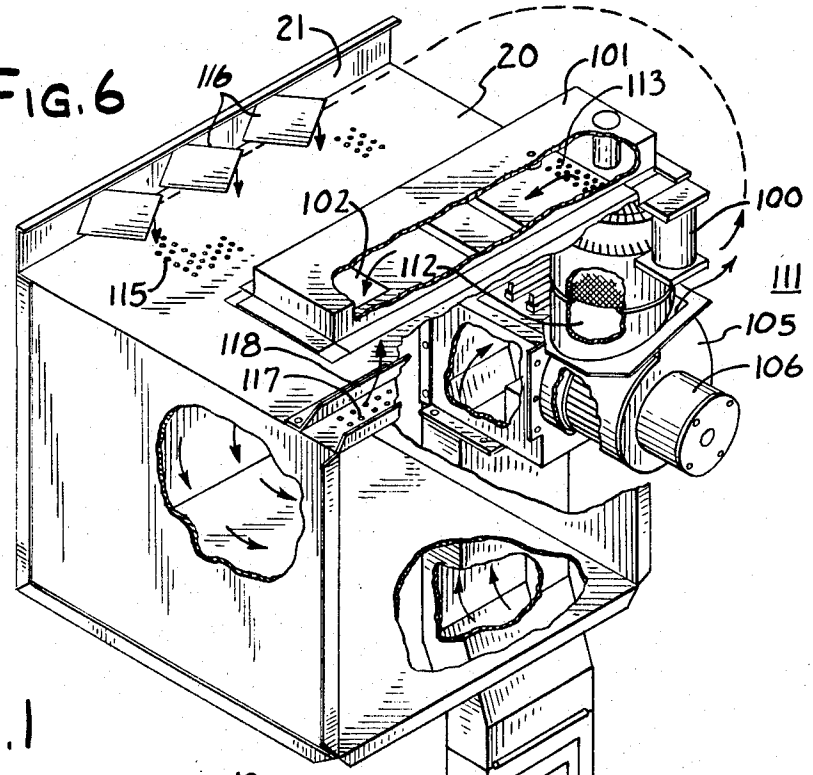

FIG. 1

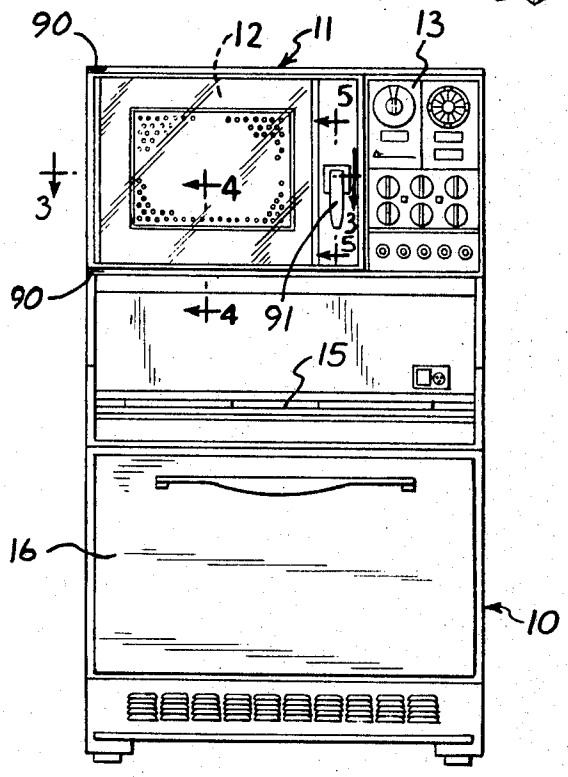

INVENTOR
EGBERT M. TINGLEY

by: Wolfe, Hubbard, Voit & Osann
ATTYS.

Feb. 25, 1969 E. M. TINGLEY 3,430,023

DOOR CONSTRUCTION AND VENTILATING SYSTEM FOR MICROWAVE OVEN

Filed Sept. 11, 1967 Sheet 2 of 3

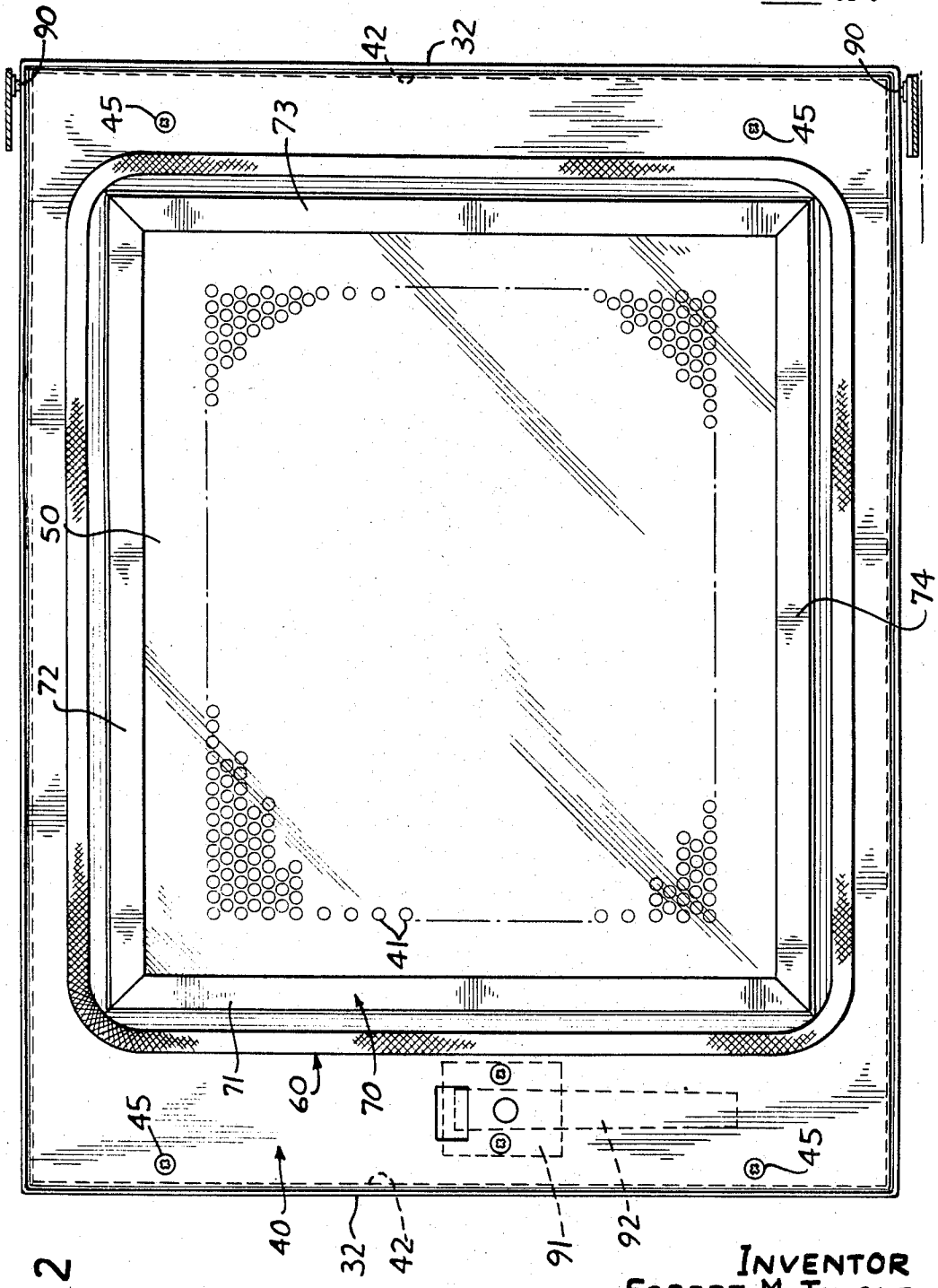

FIG. 2

INVENTOR
EGBERT M. TINGLEY

by: Wolfe, Hubbard, Voit & Osann
ATTYS.

Feb. 25, 1969 E. M. TINGLEY 3,430,023

DOOR CONSTRUCTION AND VENTILATING SYSTEM FOR MICROWAVE OVEN

Filed Sept. 11, 1967 Sheet 3 of 3

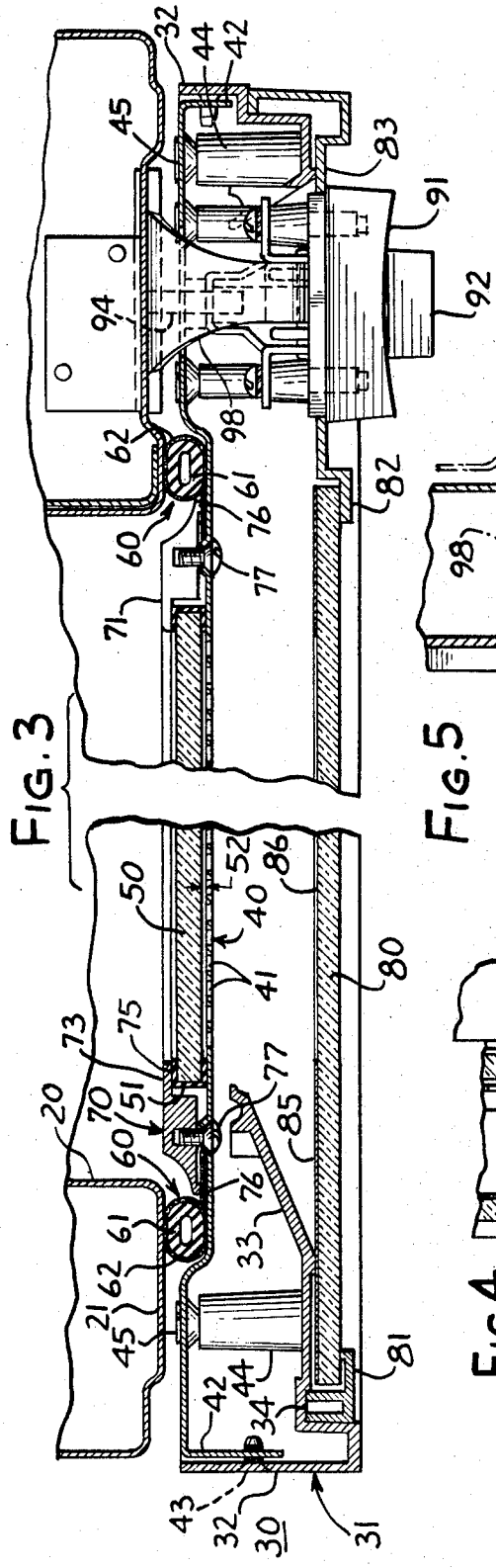

FIG. 3

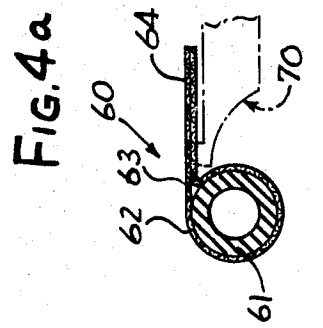

FIG. 4a

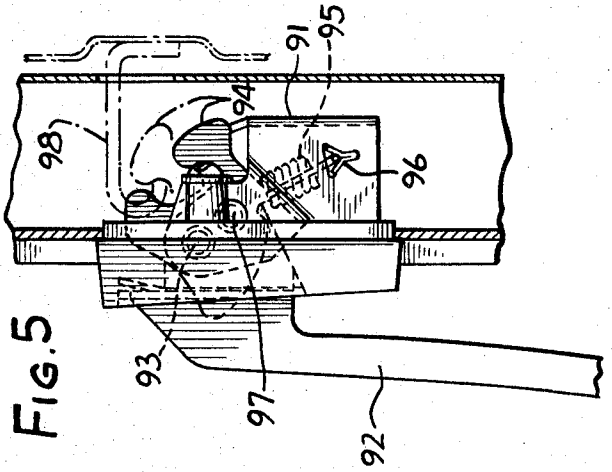

FIG. 5

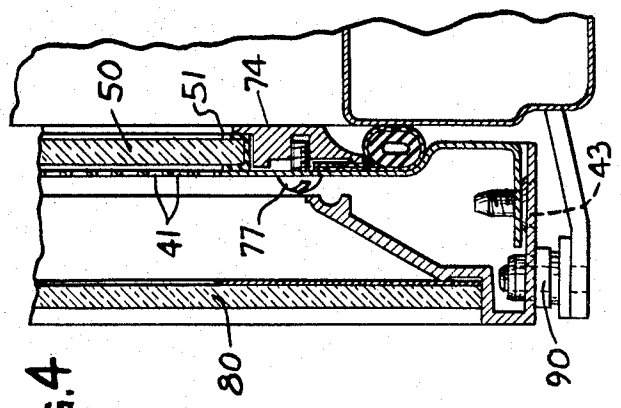

FIG. 4

INVENTOR
EGBERT M. TINGLEY

by: Wolfe, Hubbard, Voit & Osann
ATTYS.

United States Patent Office 3,430,023
Patented Feb. 25, 1969

3,430,023

DOOR CONSTRUCTION AND VENTILATING SYSTEM FOR MICROWAVE OVEN

Egbert M. Tingley, Kankakee, Ill., assignor to Geo. D. Roper Corporation, Kankakee, Ill., a corporation of Delaware

Filed Sept. 11, 1967, Ser. No. 666,805
U.S. Cl. 219—10.55 6 Claims
Int. Cl. H05b 9/06

ABSTRACT OF THE DISCLOSURE

A door construction for a microwave oven providing both a vapor seal and a seal against the escape of microwave energy from the oven cavity and a modified ventilating system for use therewith.

It is an object of the present invention to provide a door construction for a microwave oven which permits viewing of the contents of the oven but which nevertheless prevents escape of vapors and microwave energy from the oven cavity. It is a more specific object to provide a door construction which serves as a highly efficient microwave and vapor shield, consisting of a minimum number of parts which are simply formed and easily assembled but which form a door which is structurally strong and attractive in appearance. It is another object of the invention to provide a door which precludes flow of vapors through the perforations conventionally employed and which utilizes a modified ventilating system of increased effectiveness.

Other objects and advantages of the invention will become apparent upon reading the attached detailed description and upon reference to the drawings in which:

FIG. 1 is a front view of a range including a microwave oven incorporating the present invention;

FIG. 2 is a back view of the door employed in the oven of FIG. 1;

FIG. 3 is a section, broken for purposes of foreshortening, looking along the line 3—3 in FIG. 1;

FIG. 4 is a section taken along the line 4—4 in FIG. 1;

FIG. 4*a* is a cross section taken through the conductive gasket;

FIG. 5 is a fragmentary section taken through the latch mechanism and looking along the line 5—5 in FIG. 1;

FIG. 6 is a diagram showing the associated ventilating system.

While the invention has been described in connection with a preferred embodiment, it will be understood that I do not intend to be limited to the particular embodiment but intend, on the contrary, to cover the various alternative and equivalent constructions included within the spirit and scope of the appended claims.

Turning now to FIGURE 1 there is shown a range **10** having a microwave oven **11** at the top with an oven cavity **12** and an adjacent control panel **13**. Behind the control panel is a space for containing the microwave generating components as well as a blower system to which reference will later be made. Arranged below the microwave oven is a conventional cooking top **15**. The lower part of the structure is formed by a conventional oven **16**. The cooking top and conventional oven may be heated by either gas or electricity. Having both types of ovens in the same structure enables the two types of cookery to be carried on simultaneously.

The cavity **12** of the microwave oven has a liner **20** which is formed of conductive metal and which is continuous, free of any openings except the perforations required for admission and exhausting of air and the port for admission of microwave energy. The oven liner

is flanged outwardly to provide a front facing **21** of conductive metal which completely surrounds the front opening of the cavity.

In accordance with the present invention a door is provided for the oven having a peripheral frame and a conductive panel or liner which is centrally perforated and sealed by a rear cover glass, about which extends a continuous conductive gasket for engaging the facing of the oven cavity to prevent escape of both vapor and microwave energy. Further in accordance with the invention a seat is provided in the front edge of the peripheral frame for mounting a front cover glass to produce a rigid box-like construction while enabling the contents of the oven to be clearly viewed. Thus, turning to the drawings, the door of the microwave oven, indicated at **30**, has a peripheral frame **31** of picture frame shape including a side flange **32** and an inwardly extending dished flange **33** which is recessed to form a peripheral seat **34**. Extending over, and enclosing, the entire rear surface of the frame **31** is a conductive liner panel **40**, the central portion of which is punched with a two-dimensional pattern of perforations **41** and the periphery of which is formed with a side flange **42**. The latter is dimensioned for snug telescoping within the side flange **32** of the door frame, with the two parts being secured together by self-tapping screws **43**. If desired for further rigidity the inner flange of the frame may be provided with a series of integral pedestals **44** engaged by screws **45** which penetrate registering countersunk openings in the liner panel.

For the purpose of covering the pattern of perforations **41**, a rear cover glass **50** is used having a continuous vapor sealing gasket **51** which is of resilient material of U-shaped cross section. When the cover glass **50** is seated in position, the thickness of the vapor sealing gasket defines a thin space **52** maintaining the glass out of contact with the metal panel over the region of the perforations.

To seal the liner panel with respect to the front facing **21** of the oven cavity, a continuous gasket **60** is used (FIG. 4*a*) formed of resilient hollow tubing **61** which is surrounded by a wire mesh **62** stitched at **63** to define an anchoring web **64**. The tubing is preferably made of heat-resistant synthetic rubber, for example of the silicone type, and the wire mesh may be of loose knitted construction using a gauge of wire which is sufficiently thin to provide a high degree of flexibility and of sufficiently wide mesh so as to preserve the vapor sealing effect of the rubber surface. The wire may, for example, be formed of a nickel-chromium alloy or of stainless steel.

In accordance with one of the aspects of the invention a subframe is provided surrounding the cover glass and having an inner clamping edge or flange which overlies and engages the peripheral edge of the cover glass and an outer clamping edge or lip which presses against the anchoring web **64** of the door sealing gasket **60**. Referring to FIGS. 2 and 3, the subframe, indicated generally at **70**, is formed of four separate sections **71–74** arranged closely end to end. The inner edge of each section has an integral lip or flange **75** which is suitably offset to accommodate the thickness of the vapor sealing gasket **51** and cover glass **50** while the outer edge of each section is provided with a raised clamping lip **76** for providing a localized line of pressure along the neck portion of the anchoring web **64** of the gasket **60**. Each section is secured in place on the liner panel by a central row of screws **77**. Since the sections of the subframe are independent of one another, each section is capable of self-adjustment, teeter-totter fashion, about the line of fastening so as to apply balanced concentrated forces to the cover glass and web of the gasket, respectively. The net effect is to insure that a sealing force is evenly applied about the entire periphery of the cover glass while insuring that a good electrical

and mechanical connection is obtained along the length of the conductive gasket **60**. It has been found convenient, in manfacture, to employ a simple jig for assembling the parts together. First the sections of the subframe are laid in place on the jig, face down, topped by the cover glass and the web of the conductive gasket. The liner panel is then placed, face down, on the assembly with the fastening screws **77** being inserted and tightened. Following this it is a simple matter to telescope the liner panel into position within the peripheral frame.

To complete the assembly, an outer cover glass **80** is seated in the ledge **34** formed in the peripheral frame. The outer cover glass in engaged along its left-hand edge by a flanged insert **81** and along its right-hand edge by a flange **82** integrally formed in a panel **83**. The cover glass **80** is preferably silvered along the edge as indicated at **85**, leaving a clear central portion **86** for viewing through the perforations **41** in the liner panel.

For the purpose of mounting the door on the range, and for exerting sufficient clamping pressure in the closed position to compress the resilient gasket, I employ a simple form of hinge **90** along the left-hand edge and a latch mechanism **91** at the right-hand edge. While the latch mechanism does not per se form a part of the present invention, brief mention may be made of the mechanism with reference to FIG. 5. Here it will be seen that the mechanism **91** has a handle **92** which is pivoted at **93**. A toggle member **94**, also pivoted at **93** has an over-center compression spring **95** which is anchored at **96** and coupled to the toggle member at pivot **97**. The toggle member engages a catch **98** which is secured to the frame of the oven. Thus when the door is closed the catch **98**, striking the toggle member above its point of pivoting, causes the toggle member to snap over-center to the position shown, the spring **95** serving to apply an inward pull upon the catch **98**, thereby compressing the gasket **60** evenly about its entire length. The conductivity of the wire mesh insures that there is electrical continuity between the oven liner and the door liner to preclude any escape of microwave energy. At the same time the convolutions of the wire forming the mesh are accommodated by the resilient surface of the rubber gasketing material so that an efficient vapor seal is preserved.

Experience shows that the above door construction not only brings about an efficient vapor and microwave seal but that the layers of glass, spaced from one another on opposite sides of the rear panel, form a box-like structure which is self-reinforcing to provide a high degree of strength and mechanical rigidity. The structure is considered electrically and mechanically superior to the structures conventionally used and possesses the additional advantage that it can be manufactured at low cost. The assembly, including its partly silvered front cover glass, provides a richer more finished appearance than oven doors where the perforations are left uncovered for venting purposes.

In accordance with one of the more detailed aspects of the invention the sealed door is employed in conjunction with venting means which provides a well defined circulation path within the oven cavity. Thus, referring to FIG. 6, which is diagrammatic, the oven liner **20** is shown to the right of which is mounted microwave generating apparatus **100** which is coupled to the oven cavity by means of a wave guide **101** having a port **102**. For the purpose of cooling the microwave generator and for inducing a well defined circulation of air in the oven cavity, a blower **105** is provided having a drive motor **106** and an air intake conduit **107**. The output of the blower is split into two portions, a major portion **111** and a minor portion **112**. The minor portion of the air is forced through suitable passages and cooling fins in the microwave generator following which the air is directed upwardly through perforations **113** into the waveguide **101** for discharge through the microwave port **102** into the oven cavity. The major portion of the air from the blower is directed into perforations **115** formed in the upper wall of the oven liner along the rear edge thereof. Although not specifically shown in FIG. 6, it will be understood that the air is conducted to the inlet ports **115** between the outer wall of the oven and the oven liner **20**. In order to assist in directing the air downwardly through the perforations, a series of deflectors **116**, arranged at an angle to the air stream, are provided.

For the purpose of venting the air which is forced into the oven cavity, a series of outlet perforations **117** are formed along the front edge of the upper wall of the oven liner. The perforations **117** are isolated from the inlet perforations **115** by an interposed vane or barrier **118**. It is found that the major portion of the air follows a well defined circulation path, sweeping downwardly from the inlet perforations **115**, forwardly within the cavity and thence upwardly along the sealed door surface for discharge through the perforations **117**. The air from the microwave port **102** entering the central portion of the oven is turbulently mixed with the main air stream prior to venting through the perforations **117**. The positive air flow pattern is to be contrasted with the usual door venting in which there is a simple drift of air through the door perforations. Following discharge the air and vapors may be allowed to enter the room or may be directed into an external discharge duct.

I claim as my invention:

1. In a microwave oven having structure defining a cavity with an opening surrounded by a front facing of conductive metal, a door for closing the opening and overlying the front facing comprising, in combination, a peripheral frame, a conductive liner panel secured to the rear of the frame for overlying the conductive facing, the central portion of the liner panel being perforated over an area, a rear cover glass covering the perforations and having a resilient vapor sealing gasket extending continuously about its edges, a resilient conductive gasket having a conductive web surrounding the cover glass, a subframe secured to the liner panel between the cover glass and the conductive gasket, said subframe having inner and outer clamping edges for respectively engaging the vapor sealing gasket at the edge of the rear cover glass and the web of the conductive gasket to clamp the same in place on the panel, and a front cover glass secured to the front of the peripheral frame.

2. The combination as claimed in claim **1** in which the subframe is of rectangular shape formed of four separate pieces having clamping lips along the edges and having fasteners spaced between the edges for exerting concentrated lines of pressure against the vapor sealing gasket and the web of the resilient gasket respectively.

3. The combination as claimed in claim **1** in which the subframe is of rectangular shape formed of four separate pieces of metal spaced closely end to end and each having a flange spaced from the panel along one edge overlying the edge of the glass for clampingly engaging the vapor sealing gasket and a lip along the other edge for clampingly engaging the web of the resilient conducting gasket, each piece of the subframe being separately secured to the panel by means of a central row of screws so that a concentrated line of pressure is simultaneously applied along the entire length of each of the gaskets for clamping the same in position.

4. In a microwave oven having structure defining a cavity with an opening surrounded by a front facing of conducting metal, a door for closing the opening and overlying the front facing comprising, in combination, a peripheral door frame having a side flange, a conductive liner panel having a side flange telescoped into the flange of the frame and having a central perforated area, a rear cover glass covering said perforations and having a resilient vapor sealing gasket extending continuously around its edges, a resilient conductive gasket formed of rubber surrounded by wire mesh, a subframe surrounding the glass and having screws for securing the same to the rear

surface of the liner panel, said subframe having clamping lips along the edges thereof for applying clamping pressure simultaneously to the vapor sealing gasket and the resilient conductive gasket upon tightening of said screws, said door frame defining a recessed seat along the front edge thereof, and a front cover glass having means for securing the same intimately seated on said seat for rigidifying the frame while permitting viewing of the oven contents through the perforations.

5. In a microwave oven having structure defining a cavity with an opening surrounded by a front facing of conducting metal, a door overlying the front facing comprising, in combination, a frame, an extensive liner panel of conducting metal having a central two-dimensional pattern of perforations, a rear cover glass plate for overlying the perforations, a resilient conductive gasket on said liner panel extending around the cover glass, the top wall of the cavity having a set of inlet perforations along its rear edge and a set of outlet perforations along its front edge, barrier means for isolating the two sets of perforations, means including a blower for applying pressurized air to the inlet perforations, means including a latch for maintaining the door in closed position with the

conductive gasket compressed to prevent escape of air and vapor about the periphery of the door, said cover glass being sealed to the liner panel about its edges to prevent escape of air and vapor through the perforations in the door panel.

6. The combination as claimed in claim 5 including a microwave generator having a waveguide for conveying microwave energy to the cavity and providing passages for flow of cooling air, and means for diverting a portion of the air from the blower through said passages into the oven cavity.

References Cited

UNITED STATES PATENTS

3,177,334	4/1965	Kinkle	219—10.55
3,304,401	2/1967	Long	219—10.55
3,321,604	5/1967	Stecca et al.	219—10.55

KENNETH W. SPRAGUE, *Primary Examiner.*

U.S. Cl. X.R.

126—200