United States Patent [19]

Cudzik

[11] **3,768,295**

[45] **Oct. 30, 1973**

[54] **FORMING APPARATUS AND METHOD**

[75] Inventor: **Daniel F. Cudzik,** Richmond, Va.

[73] Assignee: **Reynolds Metals Company,** Richmond, Va.

[22] Filed: **Feb. 8, 1972**

[21] Appl. No.: **224,566**

[52] **U.S. Cl.** ..... **72/347,** 113/1 F, 72/465
[51] **Int. Cl.** **B21d 22/06**
[58] **Field of Search** ..... 72/347, 348, 465, 72/466; 113/1 F

[56] **References Cited**

UNITED STATES PATENTS

353,188	11/1886	White	72/465
2,389,974	11/1945	Grieg	72/465
3,344,647	10/1967	Berger	113/120
3,585,838	6/1971	Newlon	72/465
2,177,027	10/1939	Plumb	113/1 F
1,857,628	5/1932	Eisenlohr	72/427

FOREIGN PATENTS OR APPLICATIONS

724,251	2/1955	Great Britain	72/349

Primary Examiner—Richard J. Herbst
Attorney—John F. C. Glenn et al.

[57] **ABSTRACT**

An apparatus for and method of forming a sheet metal blank is provided and includes a first die member having an outside forming surface and a second die member having an inside forming surface adapted to cooperate with the outside forming surface to form a workpiece interposed therebetween upon relatively moving the die members along a forming path into operative association. One of the die members is movable transverse such path enabling the forming surfaces acting through the workpiece to precisely align the one member to a forming position and thereby assure precise forming of the workpiece during the operative association.

3 Claims, 9 Drawing Figures

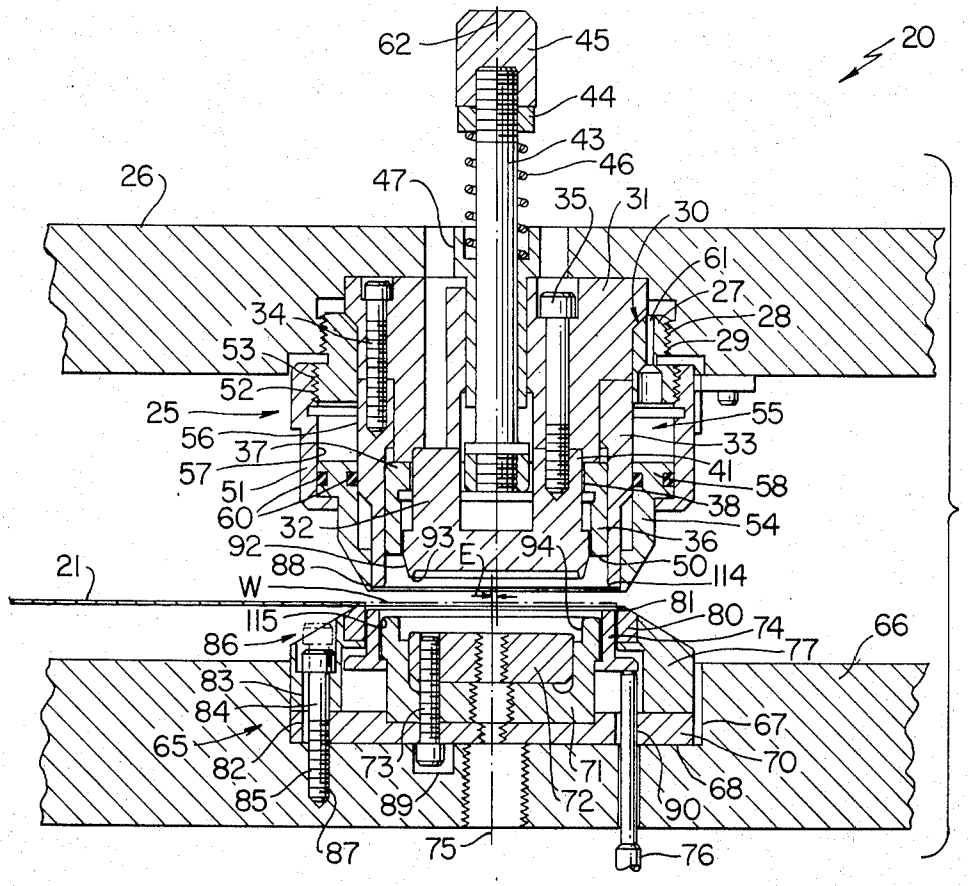

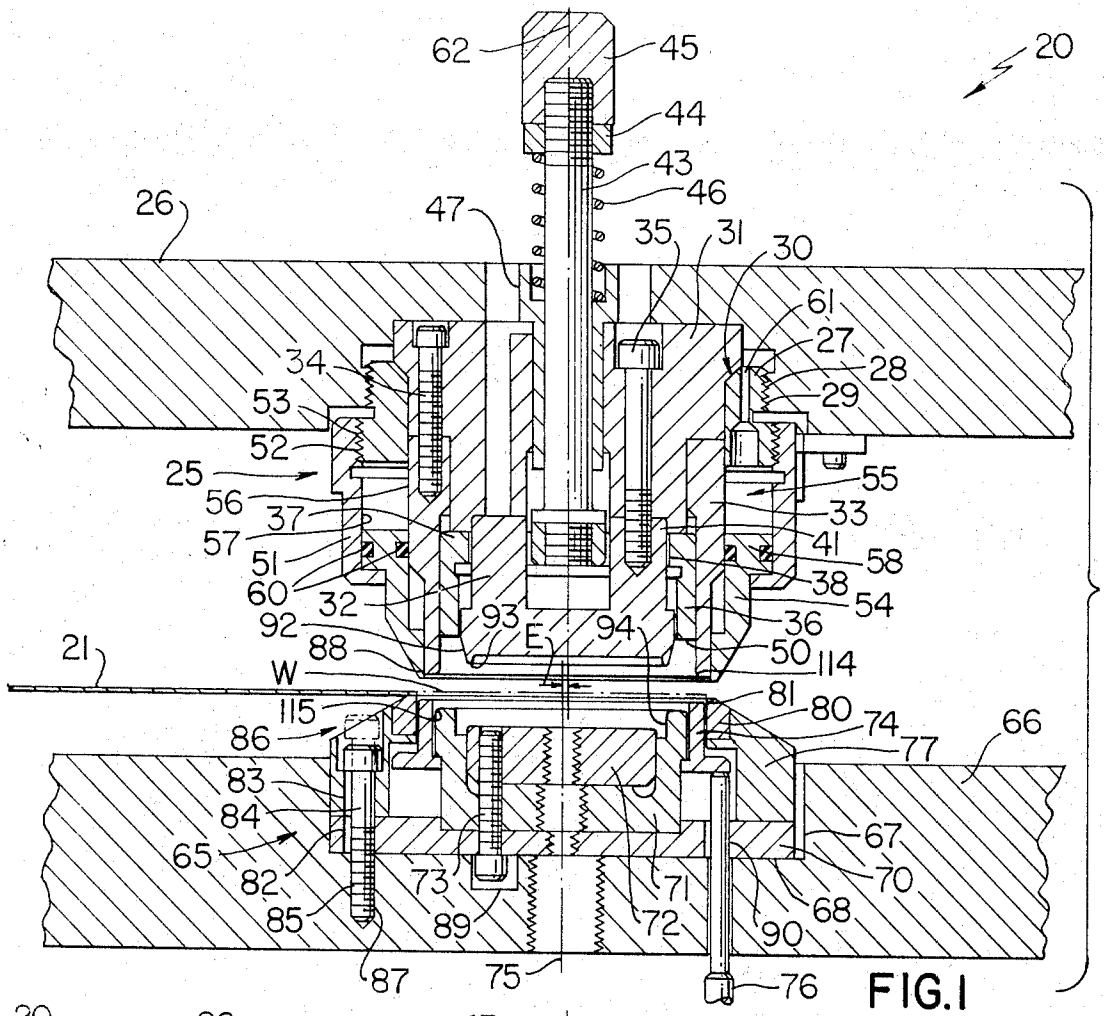
62
45
20
44
43
46
26
47
35
31
30
61
27
28
29
34
53
52
25
55
56
37
33
57
41
51
58
60
38
32
54
92
93
E
94
36
88
50
114
21
W
81
115
80
74
86
77
66
83
84
67
65
82
73
71
70
85
89
72
68
90
87
75
76

FIG.1

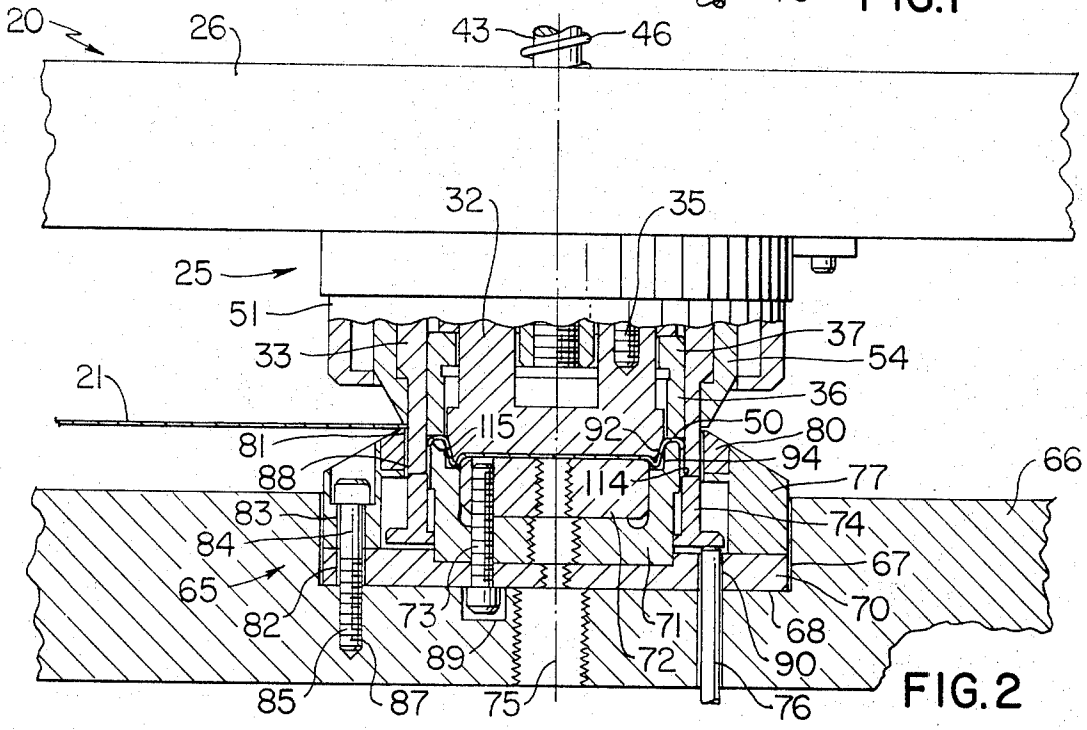
20
26
43
46
32
35
25
51
37
33
54
21
36
115
92
50
80
81
94
88
114
77
66
83
74
84
67
65
82
73
71
70
68
89
72
90
85
87
75
76

FIG.2

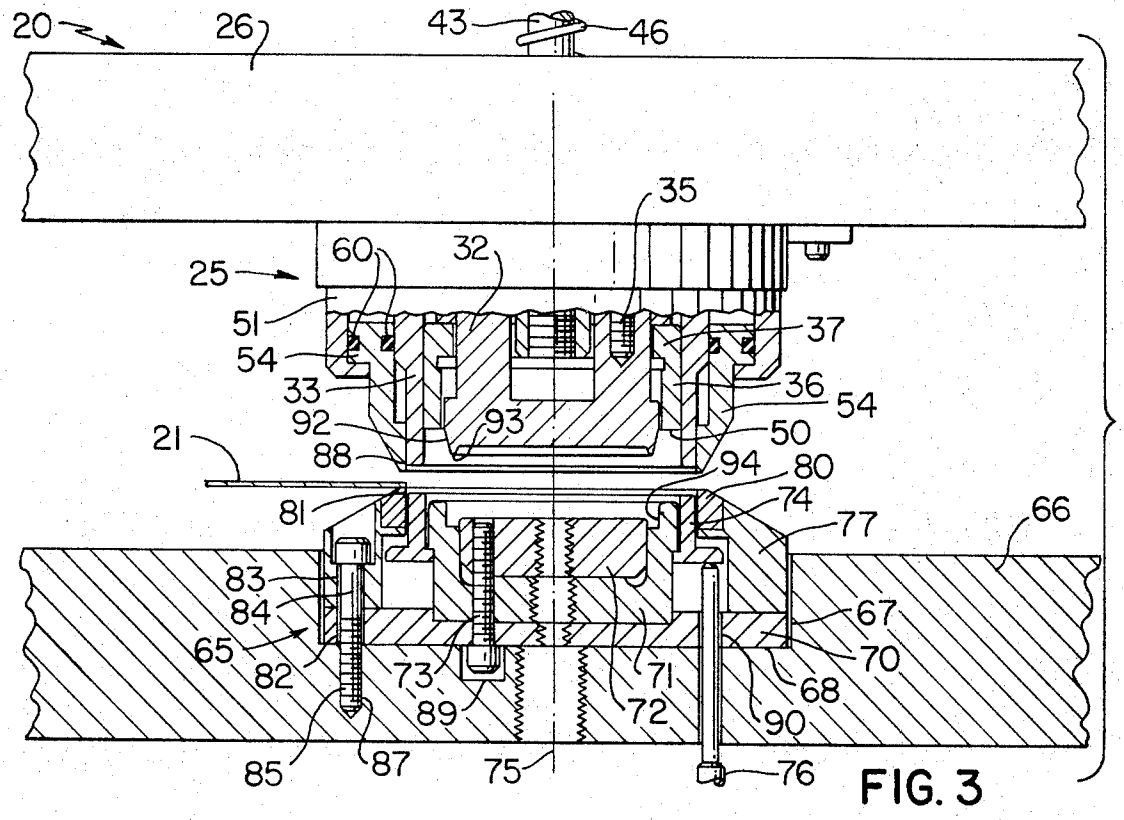
20
26
43
46
35
25
60
32
51
37
54
33
36
54
92
93
50
21
88
94
80
81
74
77
66
83
84
67
65
82
73
71
70
68
89
72
90
85
87
75
76

FIG. 3

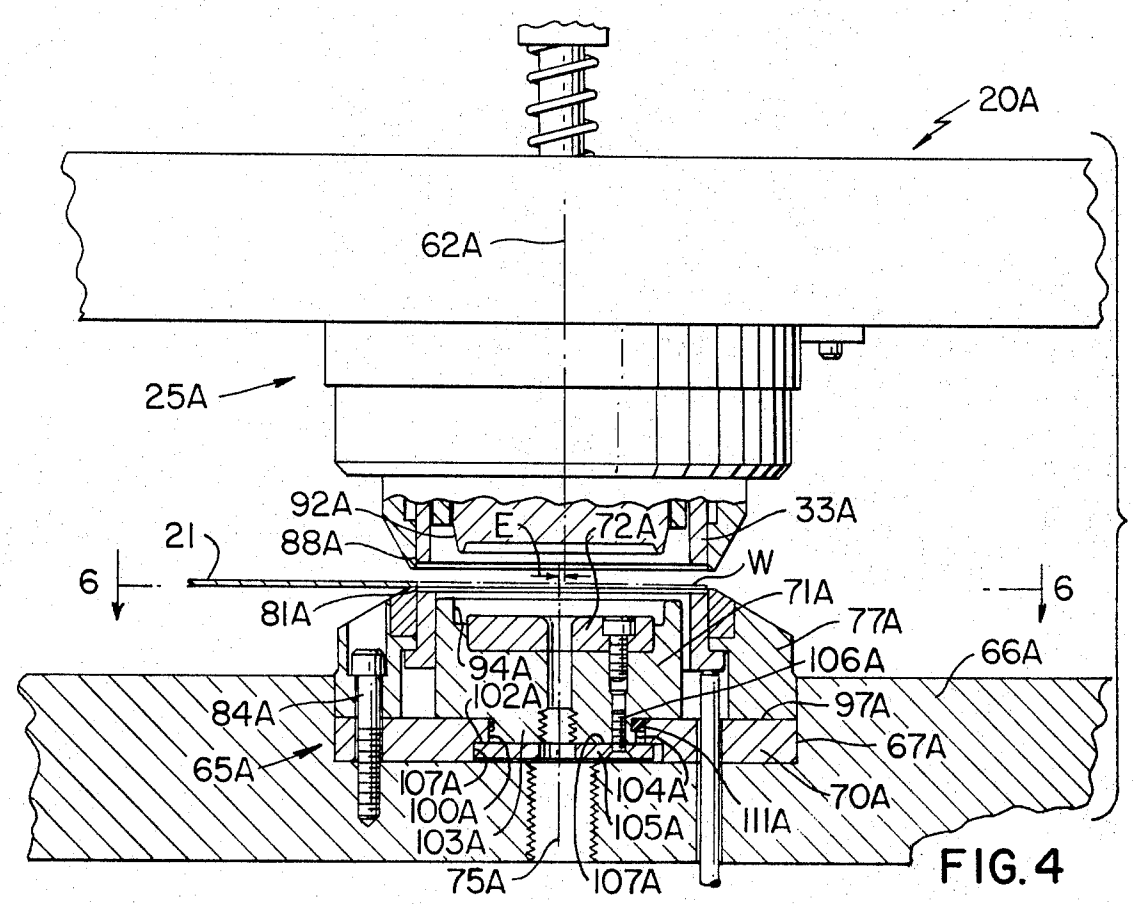
20A
62A
25A
92A
E
72A
33A
21
88A
W
6
6
81A
71A
77A
94A
106A
66A
102A
84A
97A
67A
65A
107A
104A
70A
100A
105A
111A
103A
75A
107A

FIG. 4

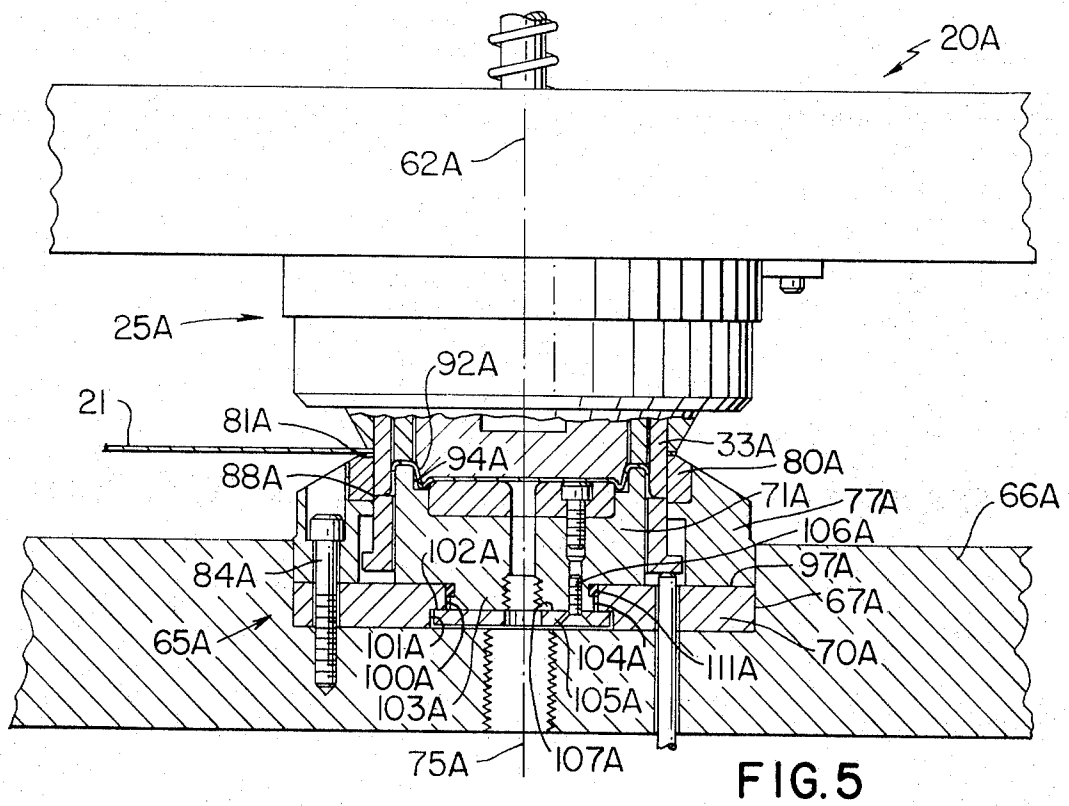
20A
62A
25A
92A
21
81A
33A
80A
94A
88A
71A
77A
66A
106A
102A
97A
84A
67A
65A
101A
104A
70A
100A
111A
103A
105A
75A
107A

FIG. 5

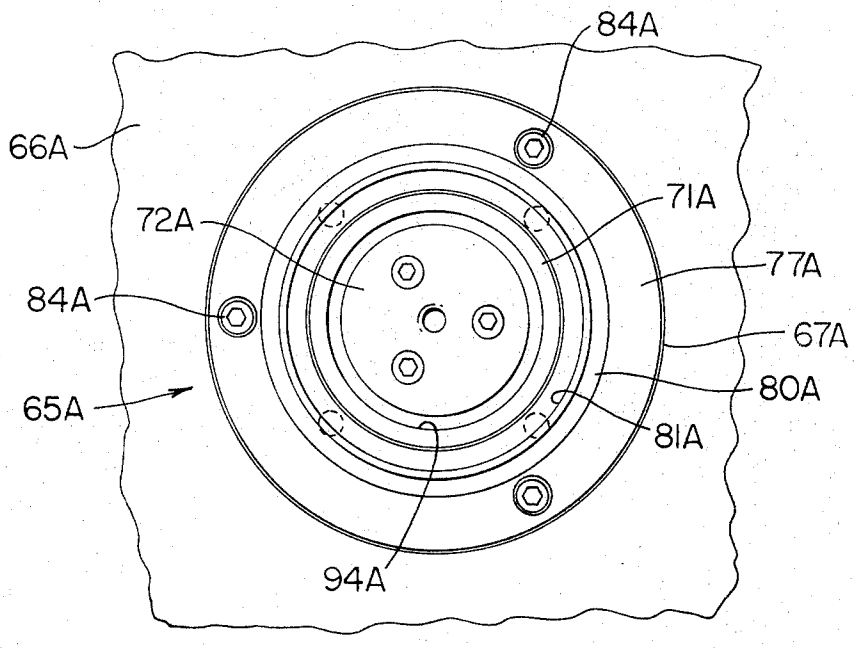
84A
66A
71A
72A
77A
84A
67A
80A
65A
81A
94A

FIG. 6

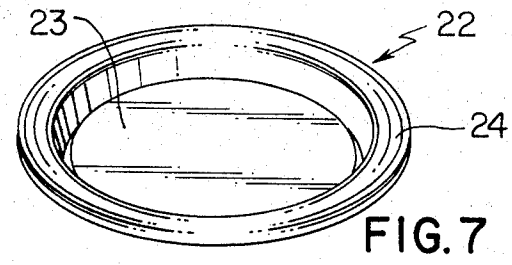

FIG. 7

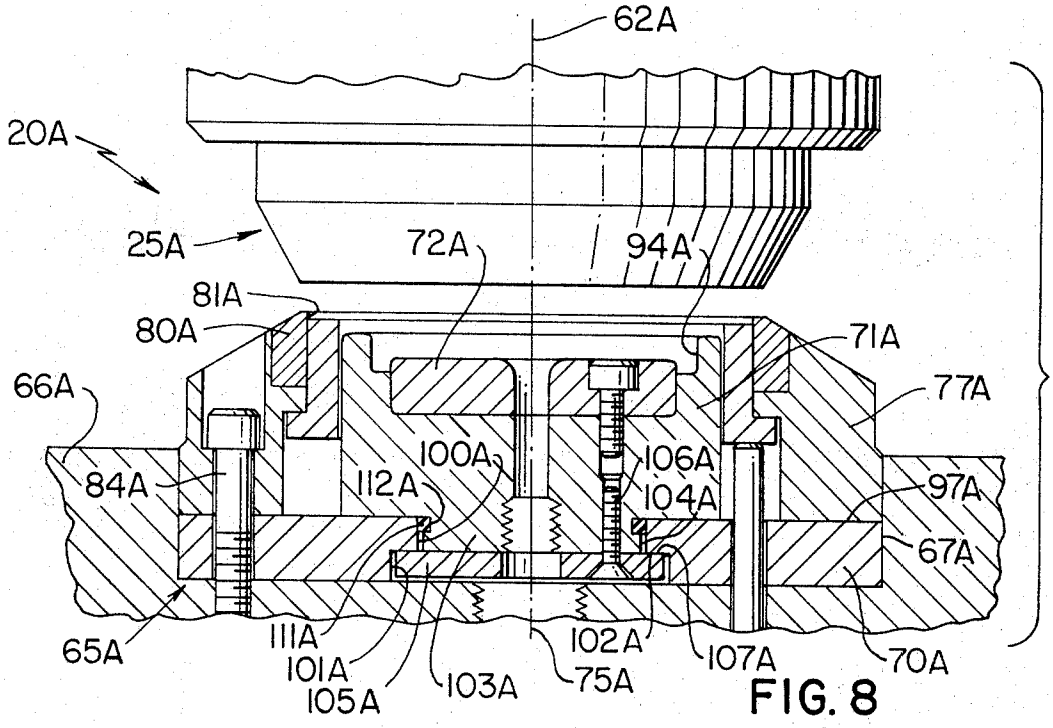

FIG. 8

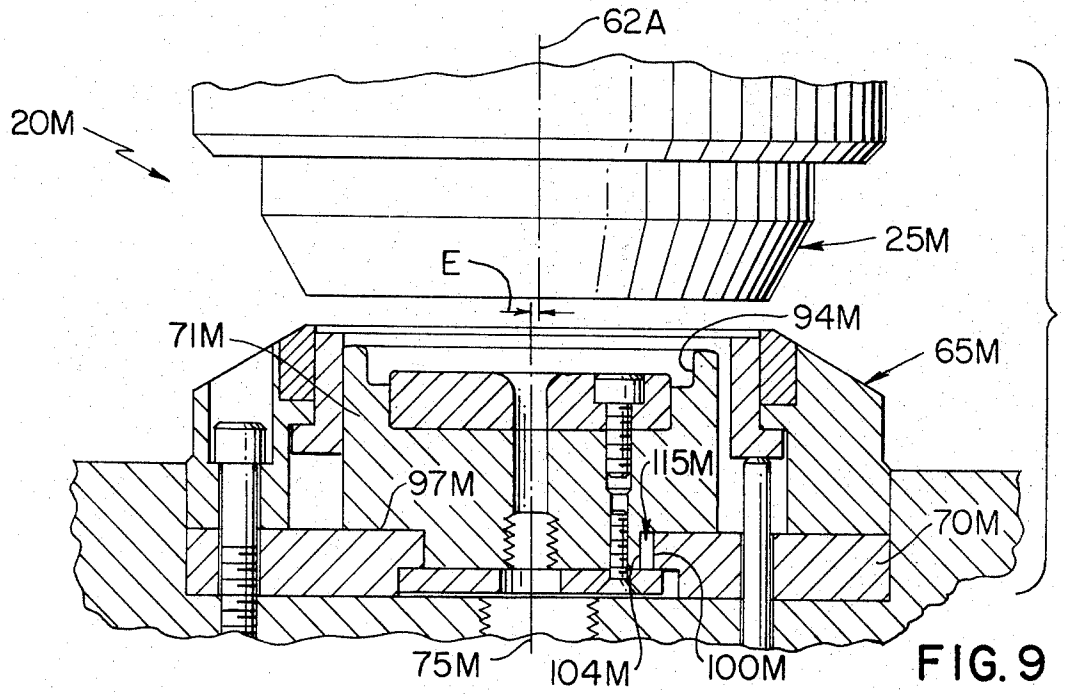

FIG. 9

FORMING APPARATUS AND METHOD

BACKGROUND OF THE INVENTION

There are numerous apparatus and methods in current used which are employed to form workpieces such as flat sheet metal blanks to define container closure members for metal cans, and the like. However, these apparatus and methods usually employ complicated and expensive components and procedures in order to assure precise forming of each workpiece under all normal operating conditions. For example, it has been found that present forming apparatus may be adjusted to provide acceptable performance initially while components thereof are at normal ambient temperatures, but once these components become heated by normal operation or wear such apparatus provide poor or marginal performance which often cannot be corrected even by time-consuming, and hence expensive, resetting of the relative positions of cooperating components. It has also been found that even by holding dimensional tolerances of these cooperating components within a few ten-thousandths of an inch, the same problems recur due to the above-mentioned wear and heating. The heating becomes very difficult to cope with because it results in different and changing unpredictable temperature levels and hence unpredictable dimensional changes of components and their relative positions.

SUMMARY

This invention provides a simple and economical apparatus for and method of forming a workpiece such as a sheet metal blank to define a container component such as an end closure, for example, which overcomes the deficiencies and problems of present apparatus and methods. In particular, the apparatus employs a first die member having an outside forming surface and a second die member having an inside forming surface adapted to cooperate with the outside forming surface to form a workpiece interposed therebetween upon relatively moving the die members along a forming path into operative association. One of the die members is movable transverse said path in an essentially free floating manner enabling the forming surface acting through the workpiece to precisely align the one member to a forming position and thereby assure precise forming of such workpiece during the operative association.

Other details, uses, and advantages of this invention will become apparent as the following description of the exemplary embodiment thereof presented in the accompanying drawings proceeds.

BRIEF DESCRIPTION OF THE DRAWINGS

The accompanying drawings show present exemplary embodiments of this invention, in which

FIG. 1 is a view with parts in cross section and parts broken away illustrating one exemplary embodiment of this invention which includes a pair of cooperating die sets each having a central vertical axis and showing such die sets with their axes misaligned in an exaggerated manner;

FIG. 2 is a view similar to FIG. 1 illustrating a first die member in the upper die set and a second die member in the lower die set cooperating to align the second die member and certain components thereof in a precise forming position so that the axes of such die members

coincide enabling fixing of the second die member and its die set in such precise forming position;

FIG. 3 is a view similar to FIG. 2 illustrating the upper and lower die sets apart and with the lower die set now fixed in its precise positon to enable forming of an associated workpiece;

FIG. 4 is a view with parts in cross section and parts broken away illustrating another exemplary embodiment of the apparatus and method of this invention which employs a free floating die member in its lower die set and showing such die member displaced from its precise forming position;

FIG. 5 is a view similar to FIG. 4 illustrating the die members and die sets of FIG. 4 in operative association with the free floating die member in its forming position and a formed workpiece positioned between the die sets;

FIG 6 is a view, minus the sheet metal web, taken on the line 6—6 of FIG. 4;

FIG. 7 is a perspective view illustrating a typical end closure which may be formed using either the apparatus of FIG. 1 or of FIG. 4;

FIG. 8 is a view of the apparatus of FIG. 4 drawn to an enlarged scale and particularly illustrating the free floating die member and associated components comprising the lower die set of such apparatus; and

FIG. 9 is a view similar to FIG. 8 illustrating another exemplary embodiment of the apparatus and method of this invention.

DESCRIPTION OF ILLUSTRATED EMBODIMENTS

Reference is now made to FIGS. 1-3 of the drawings which illustrate one exemplary embodiment of the apparatus and method of this invention, which is designated generally by the reference numeral **20**. The apparatus **20** is particularly adapted to be used in an associated conventional forming press to shear circular planar workpieces in the form of blanks from a sheet metal web **21** and precisely form each blank or workpiece to define container means or a container construction which in this disclosure is in the form of an end closure **22** which is illustrated in FIG. 7.

The end closure **22** is adapted to be fixed in position on an associated container such as a right circular cylindrical can and such closure may be made of any suitable material, such as metal containing aluminum. The exemplary closure **22** has a substantially planar sheet-like central portion **23** and a peripheral fastening flange **24** of conventional construction which enables the closure **22** to be readily fixed in position in a conventional manner.

The apparatus **20** comprises an upper die set which is designated generally by the reference numeral **25**, see FIG. 1, and such die set is fixed to a top support structure or support **26** in a manner which will be apparent from the following description. In particular, the die set **25** has a supporting ring **27** which has an externally threaded upper portion **28** which is threadedly received within a threaded opening **29** provided in the support **26** and the ring **27** has a shoulder which engages a cooperating projection on a punch adapter or member **31**, as illustrated at **30**, to hold member **31** against support **26**. The upper die set **25** has a forming punch **32** which is suitably fixed to the adapter member **31** by a plurality of threaded bolts **35** and a punch shell

33 is fixed in position concentrically around the forming punch 32 by a plurality of threaded bolts 34.

The upper die set 25 includes a knockout assembly comprised of an inverted lower cup-like member 36 which has a top wall 37 provided with diametrically opposed openings 38 which allow upper extensions 41 comprising the forming punch to extend therethrough in an unobstructed manner. The knockout assembly has an upwardly extending rod 43 which is threadedly fixed to the upper wall 37 and has a threaded member 44 threadedly attached to upper threads provided at the upper end portion of rod 43 and a head 45 is threadedly attached to the outer portion of the upper threads with member 44 being urged tightly thereagainst and serving as a lock nut. A compression spring 46 is provided and acts between member 44 and a sleeve 47 which is fixed to the top support 26. The spring 46 urges the rod 43 upwardly and simultaneously holds the lower cup-like member 36 in position, as illustrated in FIG. 1

The lower member 36 has an annular bottom surface 50 which is particularly adapted to engage the peripheral portion of a workpiece during the forming thereof. Once the workpiece has been formed defining closure 22 the knockout assembly is actuated, in a manner to be described subsequently, causing surface 50 to engage the closure 22 and remove it from the die set 25.

The upper die set 25 has a stripper retainer 51 which has a threaded inside portion 52 which threadedly engages cooperating outside threads 53 comprising the lower portion of member 27. The retainer 51 retains a stripper 54 for vertical sliding movements and the stripper 54 is used to strip or hold the web 21 away from the upper die set 25 once a circular blank used to define closure 22 has been punched therein. The stripper 54 is supported within an annular chamber 55 defined in part by the outside cylindrical surface 56 of the punch shell 33 and the inside cylindrical surface 57 of the retainer 51.

The stripper 54 has an upper annular heat portion 58 provided with a pair of grooves each supporting an associated O-ring 60. One of the O-rings 60 provides a seal between the stripper 54 and the surface 56 while the other larger O-ring 60 provides a seal between the stripper 54 and the surface 57 as the stripper moves upwardly and downwardly within its chamber 55.

The stripper 54 is resiliently urged outwardly by a fluid such as air under regulated pressure provided through a passage 61 which communicates with the upper portion of chamber 55. The passage 61 is suitably connected to a source of pressurized fluid and flow is provided into chambe 55 in timed sequence as determined by the operating cycle of the machine using apparatus 20.

The upper die set 25 and the die member or forming punch 32 have a common central vertical axis 62 and all components of die set 25 are fixed so that movements transverse axis 62 are not possible. However, the die set 25 is movable parallel to, actually essentially along, the vertical axis 62 (which will later be described as a forming path) by moving the entire top support 26 and this movement may be achieved by attaching the support 26 to a reciprocable component such as an actuator (not shown) of a standard forming machine or press and operating such actuator and press together with the remainder of the apparatus 20, which is also installed in such press and as will now be described.

The apparatus 20 also has a lower die set which is designated generally by the reference numeral 65 and such die set is adapted to be supported on an associated lower fixed support 66 which may comprise the bed of the above-mentioned forming press. The support has an opening or recess 67 provided therein which has a bottom surface 68 which is substantially larger in area than the bottom surface area of the die set 65 to be supported thereon whereby the die set may be shifted around within the opening 67 in an unobstructed manner and for reasons which will be apparent hereinafter.

The lower die set 65 has a bottom adaptor or supporting plate 70 and a lower forming die 71, including a die core 72, are suitably fixed to plate 70 by a plurality of threaded bolts 73. The die set 65 also has a draw ring 74 arranged concentrically around the forming die 71 and the ring 74 is axially movable relative to the forming die 71 and substantially vertically upwardly and downwardly along a central vertical axis 75 which is common to the lower die set 65 and the forming die 71.

The draw ring 74 is supported by conventional pressure pins 76 which engage its bottom surface at various locations about its periphery. The pressure pins have lower portions which operatively associate with a suitable fluid, such as hydraulic fluid, and serve to resiliently hold the draw ring in its upper portion and once the upper die set 25 is moved into operative engagement with the lower die set 65, the draw ring is urged downwardly against the constant pressure applied by the pressure pins 76 and in accordance with standard forming practice to enable forming of the closure 22.

The lower die set 65 also has an outer ring 77 which is supported concentrically outwardly of the draw ring 74 and the draw ring 77 has an annular insert ring 80 which has a comparatively sharp inner cutting edge 81. The cutting edge 81 cooperates with a sharp outer cutting edge 88 of the punch shell 33 to sever a circular workpiece or blank from the web 21 once the upper die set 25 is moved into engagement with the lower die set 65 and such workpiece is indicated by dotted lines in FIG. 1 and designated by the reference letter W.

The forming die 71 is fixed to the supporting plate 70 in a rigid manner so that it can move only with such plate; however, the plate 70 and the outer ring 77 have a smaller cross-sectional area than the corresponding cross-sectional area of the recess 67 in the fixed support 66. In addition, the plate 70 and ring 77 have a plurality of sets of comparatively large diameter bores 82 and 83 respectively which extend therethrough in aligned end-to-end relation and each set of bores 82 and 83 is adapted to receive an associated threaded bolt 84 of a comparatively smaller diameter than the diameter of such bores. Each bolt has a threaded lower end 85 which is threadedly received in an associated threaded opening 87 in the fixed support 66. With this arrangement, it will be appreciated that by threading each bolt 84 outwardly to the dotted line position illustrated at 86 in FIG. 1, the plate 70, ring 77, and the entire associated structure carried thereby are free to move in a direction transverse the vertical axis 75 and for a purpose to be subsequently described.

To assure that the plate 70 and hence the entire lower die set 65 is free to move within the recess 67 in what may be considered a free floating manner, a comparatively large cutout 89 is provided in the support 66 to receive the head of an associated threaded bolt 73.

Likewise, a comparatively large diameter bore **90** is provided in the plate **70** for receiving each associated pressure pin **76** to assure movement of plate **70** without obstruction by the pressure pins **76**.

The die member of forming punch **32** has an outside forming surface **92** which is this example has a substantially frustoconical configuration and terminates in an arcuate lower edge **93**. The die member or forming die **71** has an inside forming surface **94** which is adapted to cooperate with the outside forming surface **92** to form a workpiece in the form of a circular blank cut from web **21** upon relatively moving the die sets **25** and **65** and hence die members **32** and **71** into operative association.

Having described the detailed construction and arrangement of the cooperating components comprising the apparatus **20** the detailed description will now proceed with a description of the manner in which a workpiece may be formed utilizing such apparatus and method to define a container closure **22**. In particular, the web **21** is interposed between the die sets **25** and **65** with lower die set **65** being supported within recess **67** of the fixed support with its threaded bolts **84** loosened as indicated by the dotted line position illustrated at **86** in FIG. **1** whereupon the lower die set and its forming die **71** are free to float in a direction transverse, i.e., perpendicular in this example, to the longitudinal axis **75** of the lower die set **65** and forming die **71** and because axis **75** is arranged parallel to axis **62** die **71** and set **65** are free to float transverse axis **62**.

The die sets are then relatively moved together and in this example such relative movement is achieved by moving only the upper die set **75** in what may be considered, as mentioned earlier, the forming path along axis **62** and toward the lower die set **65** causing a workpiece to be sheared between the edges **81** and **88** of members **80** and **33** respectively. Continued movement of the upper die set **25** and its forming punch **32** along the forming path **62** brings the die members **32** and **71** into operative association. In particular, the frustoconical outside forming surface **92** of punch **32** operatively associates with the inside forming surface **94** of the forming die **71** resulting in the forming die **71** and the entire die structure **65** being precisely aligned so that the forming die **71** is in a desired optimum forming position wherein the axes **62** and **75** coincide (see FIG. **2** of the drawings) and thereby assuring precise forming of the workpiece during the operative association. The movement of die **71** is such that the eccentric displacement E shown in FIG. **1** between axes **62** and **75** is eliminated. Once this forming position has been established the threaded bolts **84** are firmly threaded in position fixing the forming die **71** and lower die set **65** so that the upper die set **25** may be raised to the position shown in FIG. **3**.

The upper die set **25** is raised or lifted by raising the entire support **26** whereupon a mechanical cam or other suitable device (not shown) comprising the press having apparatus **20** installed therein engages the head **45** causing member **36** of the knockout assembly to engage the formed closure member **22** and assure removal of such closure member form within the upper die set. Simultaneously with the raising of die set **25** the pressure pins **76** return the draw ring **74** to its raised position whereupon the apparatus **20** is now ready to produce closure members **22** in a high production manner. As operation of the press and apparatus is continued certain ones of the cooperating forming components may wear more than others or certain components may become excessively heated causing slight dimensional changes in cooperating relationships. In the event any of these things occur, it is a simple matter to release the die set **65** by partially unthreading bolts **84** and allowing the forming punch to realign the forming die **71** of the hot apparatus or assembly as described earlier.

Another exemplary embodiment of the apparatus and method of this invention is illustrated in FIGS. **4–6** and **8** of the drawings. The apparatus illustrated in FIGS. **4–6** and **8** is very similar to the apparatus **20**; therefore, such apparatus will be designated generally by the reference numeral **20A** and parts thereof which are very similar to corresponding parts of the apparatus **20** will be designated by the same reference numeral as in the apparatus **20** also followed by the letter designation A and not described again. Only those component parts which are substantially different from parts of the apparatus **20** will be designated by a new reference numeral also followed by the letter designation A and described in detail.

The apparatus **20A** has an upper die set **25A** which is identical to the upper die set **25** of the apparatus **20** whereby the only differences are in its lower die set **65A**. In particular, the lower die set **65A** has a supporting plate **70A** and an outer ring **77A** which are suitably held in a fixed position within an opening **67A** in the fixed support **66A** by threaded bolts **84A** and the construction and arrangement of the lower die set **65A** is such that the plate **71A** and ring **77A** are held in such fixed position and in alignment with the upper die set **25A** so that the cutting edge **88A** of the punch shell **33A** is in alignment with the cutting edge **81A** of the ring **80A** to enable a flat circular blank or workpiece to be cleanly severed from the web **21** once the die sets **25A** and **65A** are moved into cooperating engagement. It will be appreciated that the dimensional tolerance build-up and the manner in which the die sets **25A** and **65A** are fixed in aligned relation are sufficiently precise to allow efficient severing of each blank between the cutting edges **81A** and **88A**, notwithstanding the fact that it is desired that the operative association of the forming dies **32A** and **71A** must be controlled in a more precise manner.

However, in the apparatus **20A** it is also desired to provide one of the die members, the die member **71A** of the lower die set **65A**, so that it moves in an essentially free floating manner transverse the forming path defined by moving die set **25A** along its axis **62A** and the construction of the lower die set **65A** is such that only the forming die **71A** with its inside forming surface **94A** is readily movable in a free floating manner.

In particular, it will be seen that the plate **70A** has a top supporting surface **97A** which is adapted to support the forming die **71A** thereon for horizontal movement transverse the forming path **62A**. However, the die member **71A** has suitable means holding such member against movements parallel either its central axis **75A** or axis **62A**, which has been referred to as the forming path (also see FIG. **8**) and such holding means will be described now.

The plate **70A** has a right circular cylindrical opening or bore **100A** extending therethrough which defines a cylindrical surface also designated **100A** and the bore is provided with a counterbore **101A** which extends up-

wardly from the bottom surface of the plate **70A** and defines an annular bottom retaining surface **102A**. The die member **71A** has a right circular cylindrical projection **103A** provided as an integral part thereof which extends through the bore **100A** and the projection **103A** has an outside surface **104A** which has a substantially smaller diameter than the diameter of the bore **100A** for reasons which will be apparent from the following description.

The lower die set **65A** has a retainer in the form of a retainer disc **105A** which is detachably fixed to the integral projection **103A** of member **71A** by a plurality of threaded screws **106A** and the retainer **105A** has a diameter which is smaller than the diameter of the counterbore **101A** and larger than the diameter of the bore **100A**. Once the retainer **105A** is attached against projection **103A**, it defines an annular top bearing surface **107A** which slidably engages the retaining surface **102A**. Thus, the retainer **105A** allows movement of the die member **71A** in what could be considered a free floating manner while its annular bearing surface **107A** prevents movement of the die member **71A** along axis **75A** and away from the supporting plate **70A**.

The lower die set **65A** also has resilient means in the form of an annular ring **111A** which may be made of a compressible resilient elastomeric material such as polyurethane, a suitable natural or synthetic rubber compound, or the like. The ring **111A** is carried in a groove **112A** and acts between the surface **100A** and surface **104A** of projection **103A** to roughly position the free floating die member **71A** so that it is approximately centered relative to its axis **75A**. In the illustration of FIG. **4** the resilient ring **111A** is shown roughly positioned or centering the forming die member **71A** and the central axis **75A** of the forming die **71A** is off center or eccentric from the central axis **62A** of the upper die set **25A** and its forming punch **32A** by a distance indicated at E.

During operation of the apparatus **20A** the cooperating arrangement of components is such that initially a blank or workpiece W, shown by dotted lines in FIG. **4**, is severed from the web **21** by the edges **81A** and **88A** of members **80A** and **33A** respectively whereupon continued relative movement of the die members **71A** and **32A** toward each other causes the frustoconical forming surface **92A** of the forming punch **32A** cooperating with the forming surface **94A** of the forming die **71A** acting through the workpiece to precisely align the member **71A** to a forming position where the axes **75A** and **62A** are in alignment and thereby assure precise forming of the workpiece during the cooperative association of the die sets **25A** and **65A** and their operating die members **32A** and **71A**. Thus, regardless of the operating condition of the press and apparatus **20A** and regardless of whether the forming components are cold at the beginning of operation or heated after prolonged operation, in each instance a circular blank is severed to define the circular blank or workpiece W and once the members are moved into operative association the die member **71A** freely moves or floats into a precise forming position to assure precise forming of the end closure **22**.

Another exemplary embodiment of this invention is illustrated in FIG. **9** of the drawings and this latter embodiment represents a modification of the apparatus and method illustrated in FIG. **4**. Therefore, the apparatus and method of FIG. **9** will be designated generally by the reference numeral **20M** and cooperating components thereof which are similar to corresponding components of the apparatus **20A** will be designated by the same reference numeral as in the apparatus **20A** also followed by the letter designation M and not described again.

The only difference between the apparatus **20M** and the apparatus **20A** is that the apparatus **20M** does not utilize resilient means, such as the compressible annular ring **111A** of apparatus **20A** therein, whereby it will be noted that there is a space between the surface **100M** and **104M** as indicated at **115M**; and, it has been found that the apparatus **20M** will operate equally well without such annular ring. The apparatus **20** M operates in a substantially identical manner as the apparatus **20A** and the forming die **71M** moves in a free floating manner on the top surface **97M** of its plate **70M** allowing precise alignment thereof from the eccentric distance indicated at E in FIG. **9** so that once a workpiece is interposed between the die sets **25M** and **65M** the forming surfaces **92M** and **94M** acting through the workpiece precisely align the member **71M** transverse the forming path or axis **62M** to a precise forming position where the centers **75M** and **62M** are in precise alignment and thereby assure precise forming of the end closure **22**.

The apparatus **20, 20A**, and **20M** may be employed to form end closures or other cup-shaped articles using any suitable metallic material such as an aluminous material, for example.

Further, to assure precision forming and self centering of the free floating die of a particular apparatus, such as the forming die **71** of apparatus **20**, for example, the associated punch shell **33** preferably has an inside arcuate surface **114** which has a radius, see FIG. **1**, which is preferably of the order of four times the thickness of the metal stock or web **21** being formed. In addition, the outside top edge of the free floating forming die **71** has an arcuate outer surface **115** which has a radius which may be as small as two times the thickness of web **21**. The arcute surfaces **114** and **115** assure precise forming of each end closure **22** without any tendency for corner-to-corner contact.

In this disclosure of the invention the various actuating means, power sources, means for actuating the knockout device, fluid means for the pressure pins, etc., have not been illustrated. However, it will be appreciated that these items will be provided in accordance with conventional practice well known in the art.

While present exemplary embodiments of this invention and methods of practicing the same, have been illustrated and described, it will be recognized that this invention may be otherwise variously embodied and practiced within the scope of the following claims.

What is claimed is:

1. A forming apparatus comprising, a first die member having an outside forming surface, a second die member having an inside forming surface adapted to cooperate with said outside forming surface to form a flat workpiece interposed therebetween upon relatively moving said die members along a forming path into operative association, one of said members being movable in a fixed horizontal plane transverse said forming path enabling said forming surfaces acting through said workpiece to precisely align said one member to a forming position and thereby assure precise forming of said workpiece during said operative association,

means supporting said one member for movement transverse said forming path, said supporting means comprising a supporting plate having said one member detachably fixed thereto and a support having a recess therein which defines a bottom surface which is larger in area than the bottom surface area of the supporting plate, said bottom surface defining said fixed horizontal plane and slidably supporting said supporting plate and one member fixed thereon with said larger area of said bottom surface allowing said transverse movement, and at least one fastener for fixing said one member and said supporting plate in said forming position in a rigid stationary manner.

2. An apparatus for forming a metal container closure comprising, a first die member having a central axis and a forming surface, a supporting plate held at a fixed position and having a top surface, a second die member slidably supported on said top surface and having a central axis arranged parallel to the central axis of said first die member and having a cooperating forming surface adapted to cooperate with said forming surface of said first die member to form a flat circular workpiece interposed therebetween, said first die member being movable relative to said second die member along a forming path defined by its axis and into operative association with said second die member, said second die member being movable transverse its axis enabling said forming surfaces acting through said workpiece to precisely align said second die member to a forming position wherein said axes coincide and thereby assure precise forming of said workpiece during said operative association, and holding means allowing said transverse movement while holding said second die member against movement parallel to its central axis, said second die member being movable on said top surface in an essentially free floating manner and said holding means comprising a cylindrical bore in said plate, a counterbore extending upwardly from the bottom of said plate and defining a bottom retaining surface between said bore and the maximum diameter of said counterbore, a projection extending downwardly from said second die member and through said bore with a substantial clearance therebetween, and a retainer disc detachably fixed to said projection and having a top bearing surface, said retainer disc allowing movement in said free floating manner with said top bearing surface engaging said bottom retaining surface while preventing movement of said second die member along its axis and away from said supporting plate.

3. An apparatus as set forth in claim **2** in which said projection extending downwardly from said second die member has a right circular cylindrical outside surface, said bore is defined by a right circular cylindrical inside surface having a diameter which is substantially greater than the diameter of the outside surface of said projection, and further comprising resilient means acting between the outside surface of said projection and the inside surface of said bore and serving to roughly position said second die member to a position near said forming position.

* * * * *