United States Patent [19]

Rennie

[11] **3,795,091**

[45] **Mar. 5, 1974**

[54] **MEANS FOR SEPARATING FLUIDS**

[75] Inventor: **David M. Rennie,** London, England

[73] Assignee: **Combustion Engineering, Inc.,** New York, N.Y.

[22] Filed: **Aug. 18, 1972**

[21] Appl. No.: **281,884**

[52] **U.S. Cl.** **55/440,** 55/496

[51] **Int. Cl.** **B01d 45/08**

[58] **Field of Search** 55/97, 174, 185, 186, 199, 55/233, 259, 350, 440, 475, 484, 496; 210/521, 522

[56] **References Cited**

UNITED STATES PATENTS

1,890,294	12/1932	Hughes	55/436
3,133,802	5/1964	Phillips	55/483
3,626,673	12/1971	Stockton et al.	55/199

Primary Examiner—Bernard Nozick

[57] **ABSTRACT**

Parallel plates between which fluids are passed for phase separation are assembled into modular cells vertically extended within the limits established by the size of the vessel in which the cells are mounted. The plates are vertically stacked and mounted at the predetermined angle required for efficient function. A sufficient number of the cells are mounted adjacent each other to provide the desired volume capacity throughput for the vessel in which the cells are mounted.

4 Claims, 3 Drawing Figures

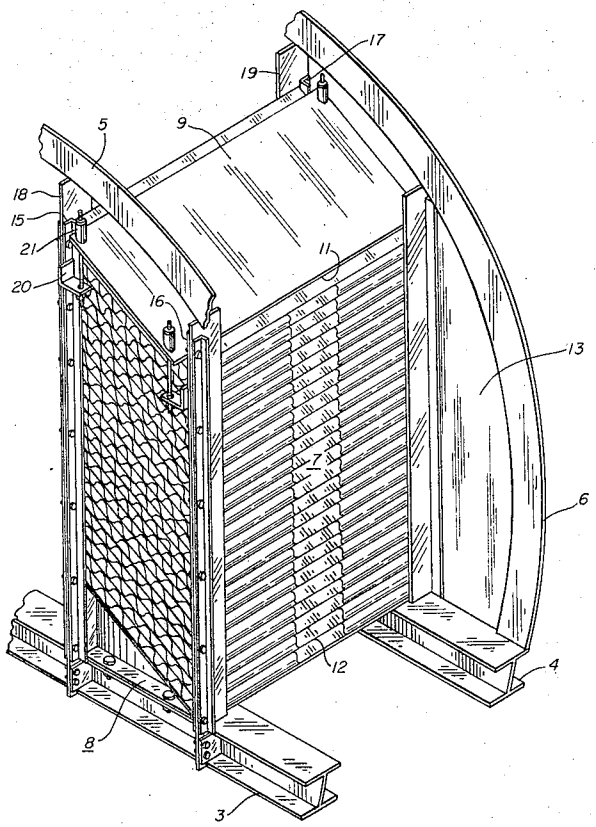

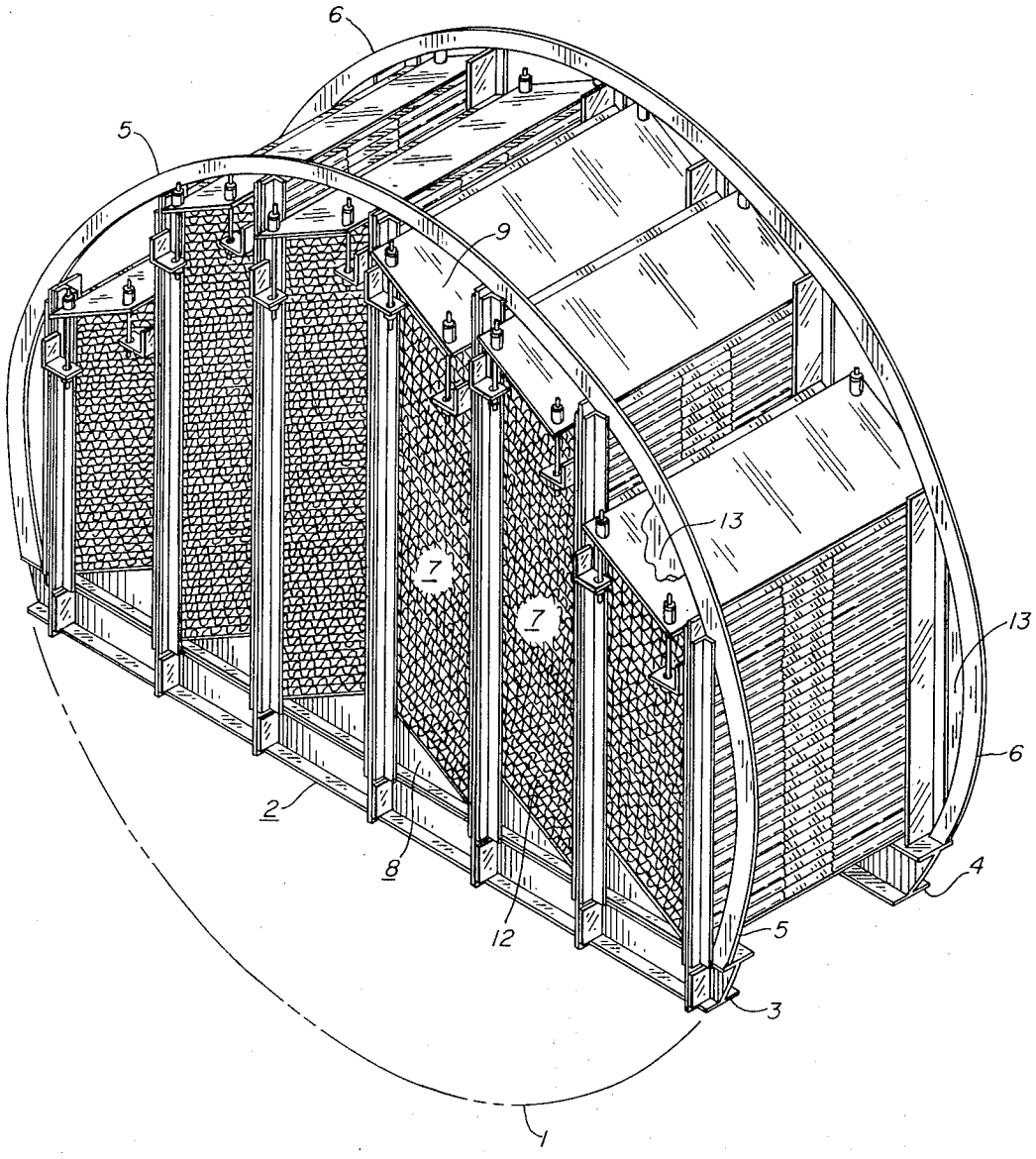

Fig. 1.

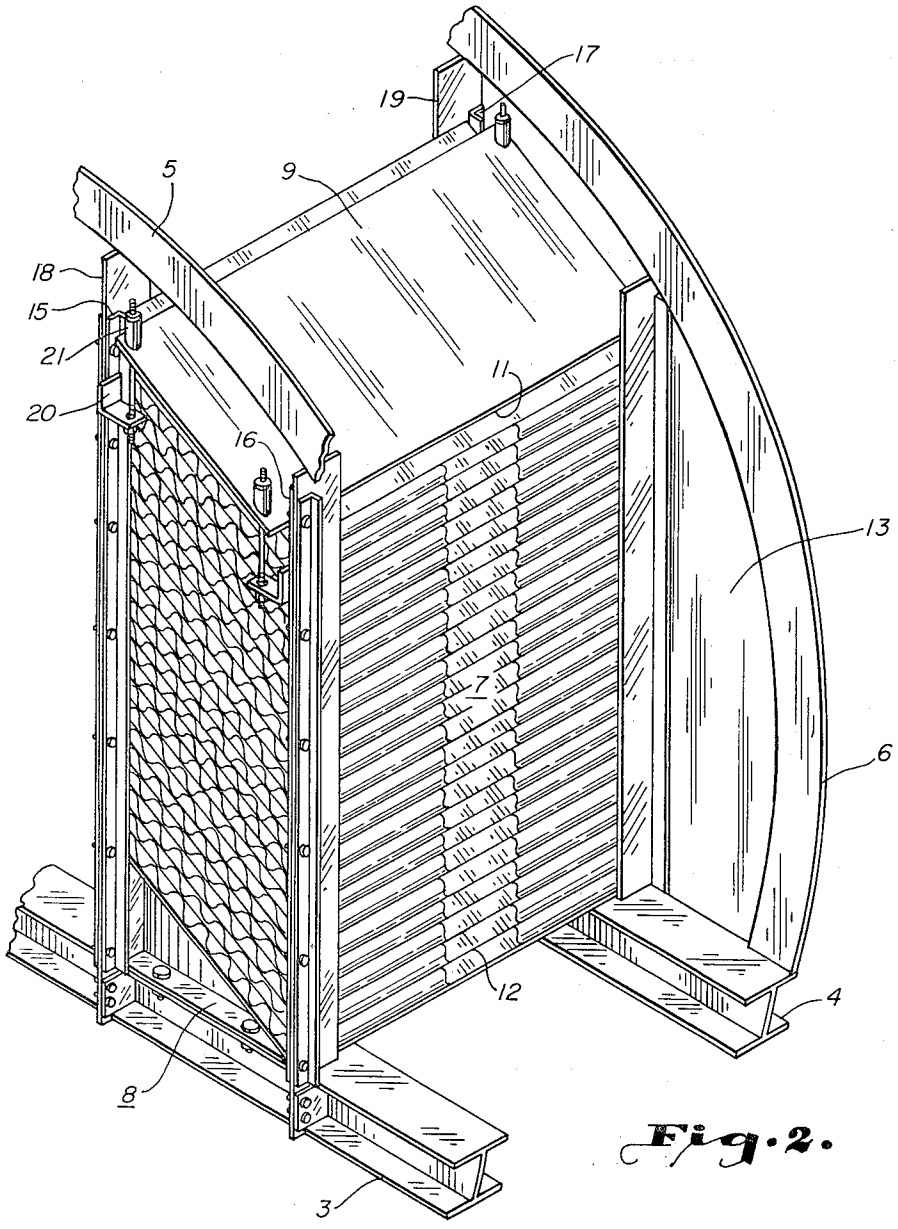

Fig. 2.

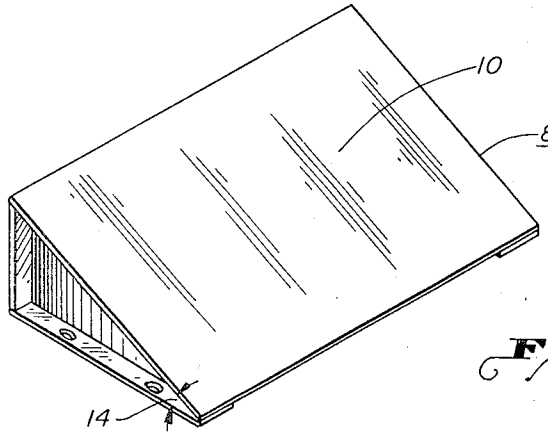

Fig. 3.

MEANS FOR SEPARATING FLUIDS

BACKGROUND OF THE INVENTION

1. Field of the Invention

The present invention relates to mounting parallel vane type plates within a modular construction and at predetermined angles which will enable them to function efficiently. More specifically, the invention relates to forming a module of parallel plates by sandwiching the assembly of plates between two flat surfaces which determine the angle the plates will form to the horizontal for efficient drainage of the liquids collected by the plates from fluids flowed between the plates.

2. Description of the Prior Art

The teachings of U.S. Pat. No. 2,349,944, issued to P.C. Dixon May 30, 1944, have successfully guided the design of fluid separators for many years. The advantages of the parallel plate baffles of the Dixon invention within separators, to provide collecting surfaces for the liquids of a gas-liquid mixture, have been generally recognized. Whenever separators including "Dixon plates" have been put to comparative tests with other separators, the Dixon structure has demonstrated it embodies a sound theory of separation.

The basic functional advantage of the Dixon plates was improved while the cost of separators per pound of weight was reduced under the teachings of U.S. Pat. No. 3,413,778, issued to Lavery et al. on Dec. 3, 1968. A modular construction for Dixon type plates was next provided under the teachings of U.S. Pat. No. 3,626,673, issued to Stockton et al on Dec. 14, 1971, which modular construction facilitated fabrication of the plates, coating of their vessel, and removal of the plates for their shipping, cleaning, service, repair and replacement.

Although the teachings of U.S. Pat. No. 3,626,673 provide modular construction for Dixon plates, there is a need for additional, significant advance in this art. The modular concepts embodied in the disclosure of U.S. Pat. No. 3,626,673 are adaptable to both the simple, parallel, flat plates specifically disclosed in that patent and the serpentine plates of U.S. Pat. No. 3,413,778. However, the practical embodiment of these concepts are limited to orienting the parallel plates at 45° to the horizontal.

The invention embodied in the disclosure of U.S. Pat. No. 3,413,778 has been given a sound commercial embodiment. However, the angle formed between the parallel sandwiching flat plates and the horizontal must not be greater than approximately 30° or the liquids collected in the valleys of the serpentine plate will not drain satisfactorily through the "scoop" interruptions. In view of the disclosure of both U.S. Pat. No. 3,413,778 and U.S. Pat. No. 3,626,673, there is obviously a need for a modular construction to provide at least the efficient angle required for operation of the serpentine plates.

SUMMARY OF THE INVENTION

A principal object of the invention is to form a vertically elongated framework about a selected number of spaced, parallel plates mounted in a vessel as a modular cell which can be connected to similar cells in forming a unit which will separate heavier fluid phases from a mixture of phases.

Another object is to structure the cells to retain the plates within the cell both parallel to each other and at any desired, predetermined angle to the horizontal.

Another object is to structure the cell so that its separate components can be inserted through a relatively small vessel opening for subsequent assembly at a desired position internal of the vessel.

The present invention provides a vertically extended modular construction for a vertical stack of spaced parallel plates mounted within a vessel so as to span a predetermined vertical span of the vessel interior, and, with similar cells, span a predetermined horizontal span of the vessel for receiving a mixture of fluid phases to separate a relatively heavy phase of the fluids from the mixture.

The invention also provides structural components for each cell with flat surfaces vertically aligned to compress the parallel plates between them at a desired, predetermined angle to the horizontal.

Other objects, advantages and feature of this invention will become apparent to one skilled in the art upon consideration of the written specification, appended claims, and attached drawings, wherein;

FIG. **1** is a perspective of a modular separator plate section as mounted in a horizontal gas-oil separator and including the present invention;

FIG. **2** is a perspective of a single cell of the modular section of FIG. **1**, enlarged to disclose additional details of the construction; and

FIG. **3** is a perspective of the lower baffle base assembly which establishes the critical angle of the parallel separator plates.

DESCRIPTION OF THE PREFERRED EMBODIMENT OF THE INVENTION

Fluid separators have been given adequate analysis in the Lavery et al. U.S. Pat. No. 3,413,778 and Stockton et al. U.S. Pat. No. 3,626,673 patent disclosures. Repetition of this material would be tedious and not facilitate disclosure of the present invention. Referring to FIG. **1**, it is only necessary to point out that a modular construction of separator plates is disclosed as mounted in a horizontal, elongated shell, the inside wall of the separator being indicated at **1**.

The separator plate section **2**, as positioned within the separator shell, is supported, or mounted, between I-beams **3,4** and rings **5,6**. Both the beams and the rings are normally welded to the internal walls of the vessel as the supportive framework for the plurality of cells **7** which comprise the section **2**. This beam and ring support structure is fixed in place and the cells **7** are mounted on this support structure as disclosed in FIGS. **1** and **2**.

The general function of parallel plates within a fluid separator has been exhaustively set forth in the patent disclosures cited supra. The advantages of the specific forms of parallel plates disclosed in Lavery et al have also been thoroughly explored. All forms of parallel, Dixon-type, plates can be used in the cells **7** of FIG. **1**. However, it is the Dixon-type plates of relatively radical configuration disclosed in the Lavery et al patent that the present invention mounts at their efficient angle to the horizontal.

The modular construction disclosed in the Stockton et al patent was a definite advance in the art at the time it was developed. Practical embodiments have been made of that invention and, undoubtedly, more will be

made and used. However, objective observation revealed that the Stockton et al. configuration is "locked in" on a 45° angle for the parallel plates. It became obvious that if the advantages of the Lavery et al. patent disclosure were desired, the Stockton et al invention could not mount the Lavery et al plates at an angle which would provide their efficient drainage of liquids separated from gas. The present invention provides this desired predetermined angle for the Lavery et al. plates, and for any other vane-type platens requiring a mounting angle other than 45°.

The present invention provides a cell of parallel plates stacked in an elongated configuration. Referring specifically to FIGS. **1** and **2**, each cell **7** can be observed as extending upward from beams **3** and **4** to the limit established by the upper wall of the vessel. Each cell is essentially a vertical stack of the separator plates between two surfaces fixed at predetermined angles to the horizontal beams **3,4**. Attached together at their sides, the plurality of cells becomes a section through which the fluids pass and in which they are separated.

The parallel surfaces between which the plates of each cell are stacked are provided by a baffle base assembly **8** and a compression plate **9**. Baffle base assembly **8** can be seen to best advantage in FIG. **3**. Compression plate **9** can be observed in FIGS. **1** and **2**. It is between surface **10** of assembly **8** and surface **11** of plate **9** that spaced plates **12** are held in position with their cell.

Baffle base assembly **8** is fixed to the cell framework on one end of the plate stack. Compression plate **9** is fixed to the cell framework on the other end of the plate stack. In this preferred embodiment, the assembly **8** is at the bottom of the stack and plate **9** is at the top.

Specifically, assembly **8** is bolted to the top of beams **3** and **4**. FIG. **2** shows this attachment the more clearly. Plate **9** is moved downward for attachment to the upper end of cell **7**, compressing the plates **12** into a fixed position. Some thought was given to jacking assembly **8** upward, but it became obvious that it was more convenient to arrange for compression plate **9** to be moved downward.

Of course, the tops of the cells do not conform to the shape of the vessel wall above them. Clear passageways remain between the upper surface of each cell's plate **9** and the vessel wall. Therefore, sector plates **13** are provided to block all fluid and force it into the passages between plates in the cells.

All of the construction described can be assembled with simple tools. There is welding involved, but it comprises relatively crude attachment welds. The other attachments are nuts and bolts which require only wrenches for their installation. There may be many pieces in this "erector set" construction, but the tools and skill required are simple.

FIG. **2** duplicates much of the FIG. **1** disclosure, but it additionally has many of the details necessary to practice the invention. The baffle base assembly **8** is given any desired angle **14**. The precise angle selected is that required for difficult drainage of the particular form of plates **12**. If the Lavery et al plate form is used, an angle **14** may be required which is definitely smaller than the 45° of the Stockton et al. disclosure. In any event, the angle of the surface **10** to the plane which is normal to the corners of cell **7** is predetermined.

The basic framework of cell **7** itself includes four parallel angle irons extending normal from a plane. In FIG. **2**, three of the angle irons **15,16,17** are readily observed. The fourth is not in view because of the drawing limitation. For each of these angle irons, there is a so-called divider bar attached to the I-beams at their lower ends. Take divider bar **18** and observe where it is disclosed as attached to I-beam **3** at its lower end. Angle iron **15** is bolted to this bar **18**, forming a corner for the corners of the separator plates **12**. This form of corner can be more specifically seen where angle iron **17** bolts to bar **19**. Such corner is formed by each of the angle irons and their divider bars and all together form a retainer for the four-cornered plates.

We now have the plates boxed in by the assembly **8** at their lower end and the corners including the angle irons. There remains the top of this container to complete the cell. Compression plate **9** is the "top". As the assembly **8** is fixed in relation to beams **3,4** and the angle irons **15,16,17**, the compression plate **9** must be moved downward, toward assembly **8** in capture of plates **12** to form the cell **7**.

The plate **9** could be given an adjustable attachment to the vessel, or the rings **5,6** to move plate **9** into position. However, it appears most simple to attach the plate **9** to the angle irons themselves. A bracket **20** is welded to angle iron **15** and a nut and bolt attachment **21** threaded between plate and bracket. Duplicated at each of the four corners, this simple structure brings the surfaces of assembly **8** and plate **9** together with the plates **12** held at their corners. The result is the cell of FIG. **2** for assembly with other cells as disclosed in FIG. **1**.

The cells are joined by connection at their edges. The angle irons are bolted to their common divider plates. The result is a separator plate assembly of cells. With sector plates **13** in position, the plate assembly functions to separate fluid phases passed through it.

SUMMARY

The technology to implement the invention results in holding parallel flat plates for mixtures of liquid and gas to pass between the plates. The plates must be held at an angle so the liquids collected thereon will drain downward.

The plates are grouped in vertical stacks termed cells. A framework outlines each of the cells. At the lower end of the cells, there is a support structure for the lower plate with which the plate is held at a predetermined angle to the horizontal plane. The support structure is embodied in the baffle base assembly **8**, providing a flat surface **10**. The support structure is also embodied in any form of means which maintains the lower flat plate of the vertical stack at the desired angle. The lower flat plate of the stack then becomes flat surface **10** to cooperate with compression plate **9** in forming the cell.

From the foregoing, it will be seen that this invention is one well adapted to attain all of the ends and objects hereinabove set forth, together with other advantages which are obvious and inherent to the apparatus.

It will be understood that certain features and subcombinations are of utility and may be employed without reference to other features and subcombinations. This is contemplated by and is within the scope of the invention.

As many possible embodiments may be made of the invention without departing from the scope thereof, it is to be understood that all matter herein set forth or

shown in the accompanying drawings is to be interpreted in an illustrative and not in a limiting sense.

The invention, having been described, what is claimed is:

1. An article of manufacture, including,
a basic framework including four parallel angle irons connected to a base from which they extend normal to the plane of the base,
a support assembly fixed to a first end of the angle irons to maintain a flat surface at a predetermined angle to the base plane,
a series of plates with means spacing them parallel to each other and stacked against one side of the angle-supported flat surface,
a compression plate connected to the second end of the angle irons and arranged to apply a flat surface against the second end of the series of stacked parallel plates,
and means connected between the framework and the compression plate with which to adjust the distance between the compression plate surface and the angle-supported flat surface in capture of the series of parallel plates between the two surfaces.

2. The article of claim 1 in which,
the angle irons are oriented vertically from a horizontal plane, the support assembly is fixed to the lower end of the angle irons, the series of vertical plates are stacked vertically, the compression plate is connected to the top end of the angle irons, and the adjustable means is a threaded link between the angle irons and the compression plate to bring the flat surfaces of the compression plate and support assembly toward each other to capture the parallel plates between the flat surfaces.

3. Modular fluid separator plate assembly for furthering the separation of two fluids, including,
at least one beam mounted horizontally across a vessel to function as a base of the assembly; and
a series of modular plate cells mounted on the beam, each cell including;
a vertically extended framework mounted from the beam to the internal wall of the vessel,
a baffle base assembly fixed to the beam and to the lower end of the framework to provide a flat surface at a predetermined angle to the horizontal plane of the beam,
a series of plates with means spacing them parallel to each other and against the upper flat surface of the baffle base assembly and within the framework,
a compression plate arranged within the framework and above the series of plates to apply a flat surface facing downwardly and against the spaced plates,
and means to connect the compression plate to the upper end of the framework in fixed relation to the baffle base assembly to capture the series of spaced parallel plates between their surfaces.

4. The assembly of claim 3, including,
means to connect the modular plate cells together along their sides and to the vessel at their tops,
and means to seal the assembly to the vessel in which they are mounted to prevent fluids passing through the vessel from by-passing the assembly.

* * * * *