OPIC
OFFICE DE LA PROPRIÉTÉ INTELLECTUELLE DU CANADA

CIPO
CANADIAN INTELLECTUAL PROPERTY OFFICE

(12) (19) (CA) **Demande-Application**

(21) (A1) **2,247,547**
(22) 1998/10/01
(43) 2000/04/01

(72) SUSKO, Rudolf, CA
(71) SUSKO, Rudolf, CA

(51) Int.Cl.^{6} A63B 5/00

(54) **DISPOSITIF DE JEU A ELINGUES POUR LA PLAGE**

(54) **BEACH SLING-JUMP AMUSEMENT DEVICE**

(57) A sling-jump amusement device for ejecting projectiles including humans into the air, featuring a pair of bows secured intersected in a brace. An ejection seat, essentially a trampoline mat bounded by a ring for placement of a projectile, is supported centrally in the place by intersecting bow strings defining a lace herein. Unlike a conventional bow the drawstrings are retracted to a drawn position opposite direction toward the bow arch enabling unobstructed ejection of an occupant positioned loose in the seat. The brace is pivotally secured in a support frame for changing the angle of the trajectory. The seat is retracted into a ready position by a winch mounted on the frame.

ABSTRACT

A sling-jump amusement device for ejecting projectiles including humans into the air, featuring a pair of bows secured intersected in a brace. An ejection seat, essentially a trampoline mat bounded by a ring for placement of a projectile, is supported centrally in the place by intersecting bow strings defining a lace herein. Unlike a conventional bow the drawstrings are retracted to a drawn position opposite direction toward the bow arch enabling unobstructed ejection of an occupant positioned loose in the seat. The brace is pivotally secured in a support frame for changing the angle of the trajectory. The seat is retracted into a ready position by a winch mounted on the frame.

BEACH SLING-JUMP AMUSEMENT DEVICE

The present invention relates to the general class of amusement devices. Its use will be in ejecting projectiles in the air with particular application for water front recreational activities whereby projectile means people.

Many recreational activities offered on public beaches and other water front places are common throughout the world. To an informed person's knowledge, the use of this device on water fronts has not been documented to date.

It is the objective of the present invention to provide an additional dimension to water diving as a recreational pastime and sport.

It is the further objective of the invention to satisfy the appetite of the fun-loving public on many water fronts with an alternative activity and excitement.

Additional activities, such as acrobatic diving or diving into the inflatable landing cushions, can evolve from the use of the present invention.

Present invention consists of a projectile ejecting equipment relying on the manual source of power and therefore its outdoor use is not limited by location. In one aspect of the invention the equipment comprising a support frame having a brace connected pivotally to the frame and resiliently flexible poles anchored in the brace. An ejection seat, having a resilient center piece fastened to an outer ring similar to that of a trampoline, is used for placement of a projectile. The seat is being flat on a transverse axis. A fastener, defining an elastic lace, fastening the seat outer ring to each frame pole. Pulling means, for instance a winch being mounted on the frame and its cable connected to the ejection seat, create a tension in the elastic lace and the resiliently flexible poles. The resilient poles and the elastic lace if put in a state of tension are capable recovering natural positions and moving the seat with a projectile in an inclined path to eject its occupants.

The invention, as exemplified by a preferred embodiment, is described with reference to the drawings in which:

Figure 1 is a rear view of the beach sling-jump recreational equipment illustrating the invention, Figure 2 is a side view of the same embodiment and Figure 3 is a top part view of the invention.

Referring to drawings, the embodiment of the invention shows, a support frame 1 made from metal material. The frame includes a brace 2 and a set of poles 3 anchored in the brace. Resiliently

flexible poles are demountably, for transport disassembly, secured in the brace and positioned to form an ejection passage as is readily apparent. The brace is being pivotally connected 4 to the frame and at the bottom end secured in an adjustable angled position by a rod 5. It becomes readily apparent that the adjustable angle of the poles with the plane of the frame will change the inclined path of the ejection. An ejection seat 6, fastened to each pole by an elastic fastener 7 similar to that of a lace, carries loosely placed projectile upward and forward in an inclined path produced by the inclined angle of the poles. The winch 8 is mounted on the frame side and its cable 9 is fastened to the seat outer ring. The ejecting occurs when by engaging the winch the seat is pulled downward to the starting position whereby bending resilient poles and bringing the elastic lace into a state of tension. Projectile is positioned in a resilient center 10 of the seat, constructed similarly to that of a trampoline. The resilient center support, fastened to an outer solid ring, absorbs the impact of the seat acceleration while enhancing the ejection. Upon release of the winch cable the ejection seat is propelled by the forces of the resilient poles, similar to that of a bow action, and the elastic lace recovering natural positions. The seat with a projectile is propelled in an inclined path to ejection. It becomes readily apparent, when the seat has reached the height of the poles and the fastener its resting position, the seat slows until halt while projectile continues its desirable airborne path. The projectile travels in the air a desirable distance produced by the combination of the poles inclined angle and the tension force in poles and the lace given by the pulling distance of the winch. Seat pulling distance can be calibrated and marked on the winch cable for various projectile weights.

Although only a single embodiment of the present invention has been described and illustrated, the present invention is not limited to the features of this embodiment, but includes all variations and modifications within the scope of the claims.

The beach sling-jump can easily be constructed by those skilled in the equipment manufacturing trade similar to that of fitness equipment. Braided strings of the elastic rope, of desirably calibrated strength, are preferable material for the fastener. The frame poles may be of a material similar to that used in pole vaulting.

The embodiments of the invention in which an exclusive property or privilege is claimed are defined as follows:

1. A device for ejecting projectiles into the air comprising:

a support frame including a structure having pulling means mounted thereto;

a brace being secured to said frame;

an ejection seat including a structure being resiliently flexible for placement of a projectile;

means for propelling a projectile being anchored in said brace forming an ejection passage for said seat;

a fastener connecting said seat to said propelling means whereby supporting said seat centrally positioned;

wherein, said pulling means drawing said seat to a ready position by having a cable connected to said seat whereby changing said propelling means position, upon disconnecting the cable said propelling means having capability of recovering original position move said seat until reaching original position whereby ejecting an occupant situated loose therein.

2. A device as claimed in claim 1, wherein said propelling means is a set of poles being resiliently flexible having capability of bowing.

3. A device as claimed in claim 1, wherein said brace being pivotally secured to said frame for changing the angle of trajectory.

4. A device as claimed in claim 1, wherein said seat having portions defining a ring being substantially flat in a transverse axis and having the resilient center attached to the ring.

5. A device as claimed in claim 1 wherein said fastener is a lace.

6. A device as claimed in claim 1 wherein said support frame being made from substantially metal material having a raised structure and wherein said pulling means is a winch.

7. A device for ejecting projectiles into the air comprising:

a support frame being made from substantially metal material including a structure having a winch mounted thereto;

a brace being pivotally secured to said frame for changing the angle of trajectory;

an ejection seat having a portion defining a ring being substantially flat in a transverse axis and having a resilient center for placement of a projectile;

a set of poles being anchored in said brace and extending therefrom forming an ejection passage for said seat;

a fastener connecting said poles distal ends from said brace to said seat whereby supporting said seat centrally positioned therein;

wherein, said winch drawing said seat to a ready position by having a cable connected to said seat whereby changing said fastener position, upon disconnecting the cable said fastener having capability of recovering original position moves said seat until reaching original position whereby ejecting an occupant situated loose therein.

8. A device as claimed in claim 7, wherein said fastener is a lace being resilient.

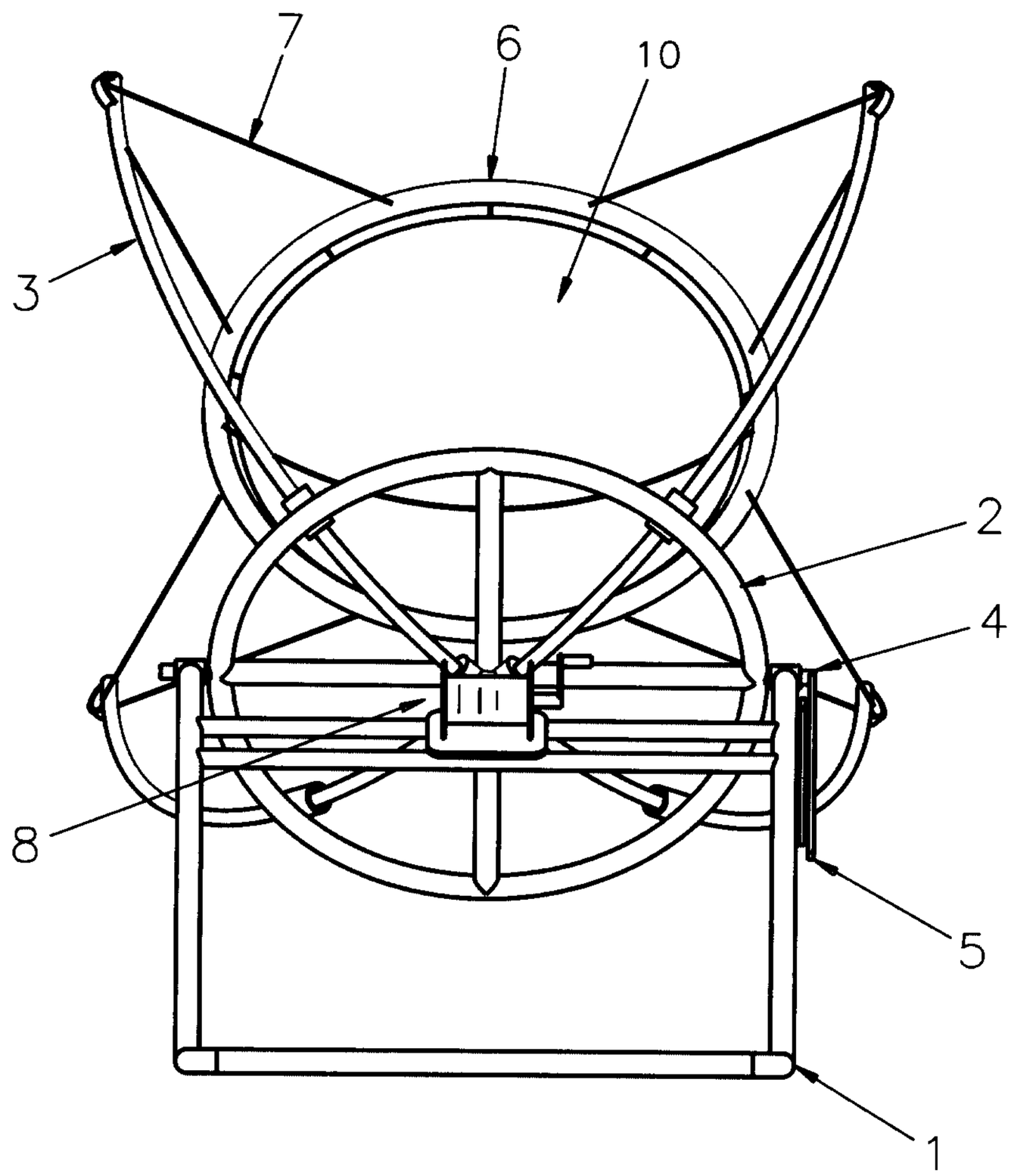

Figure 1

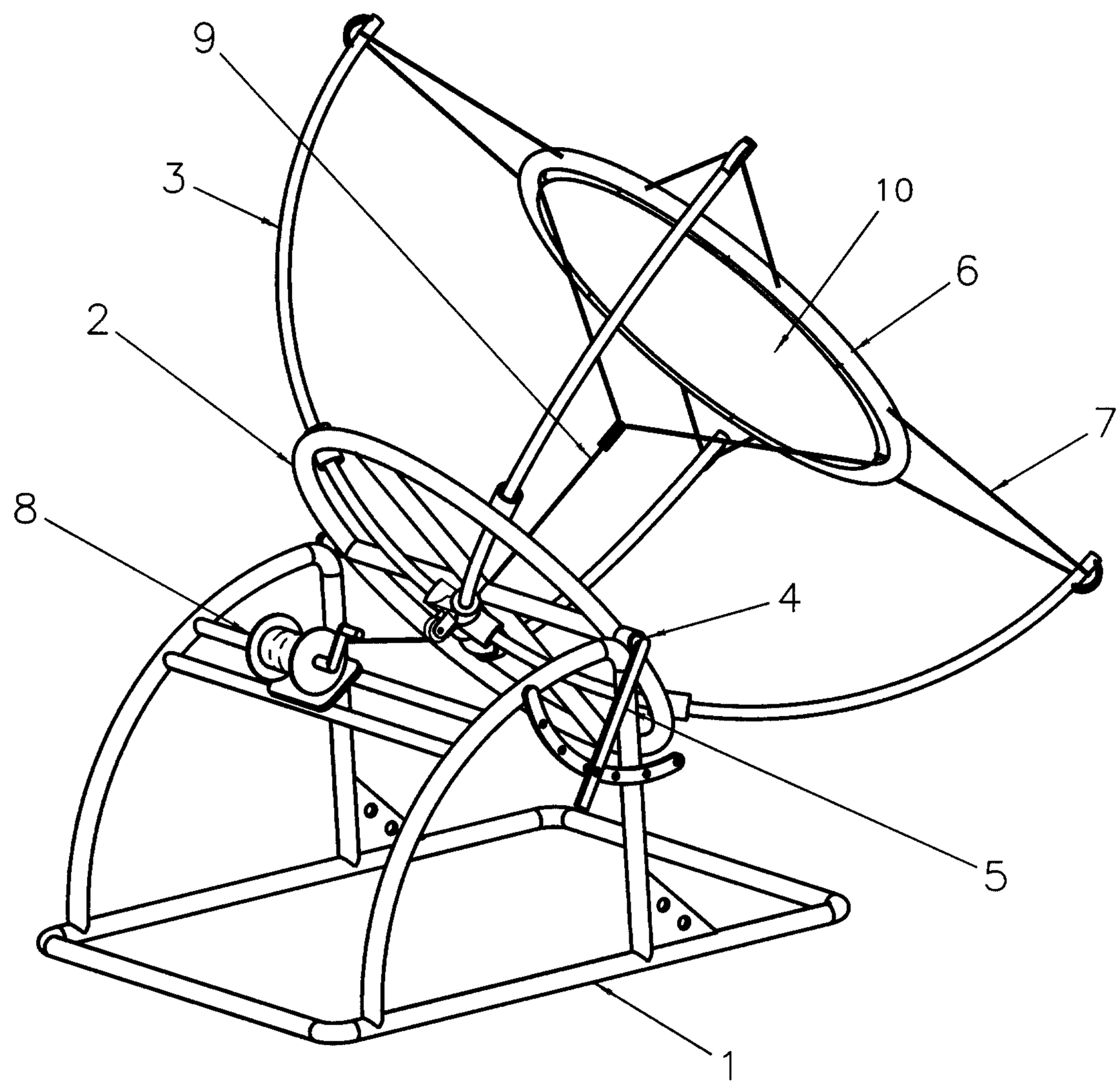

Figure 2

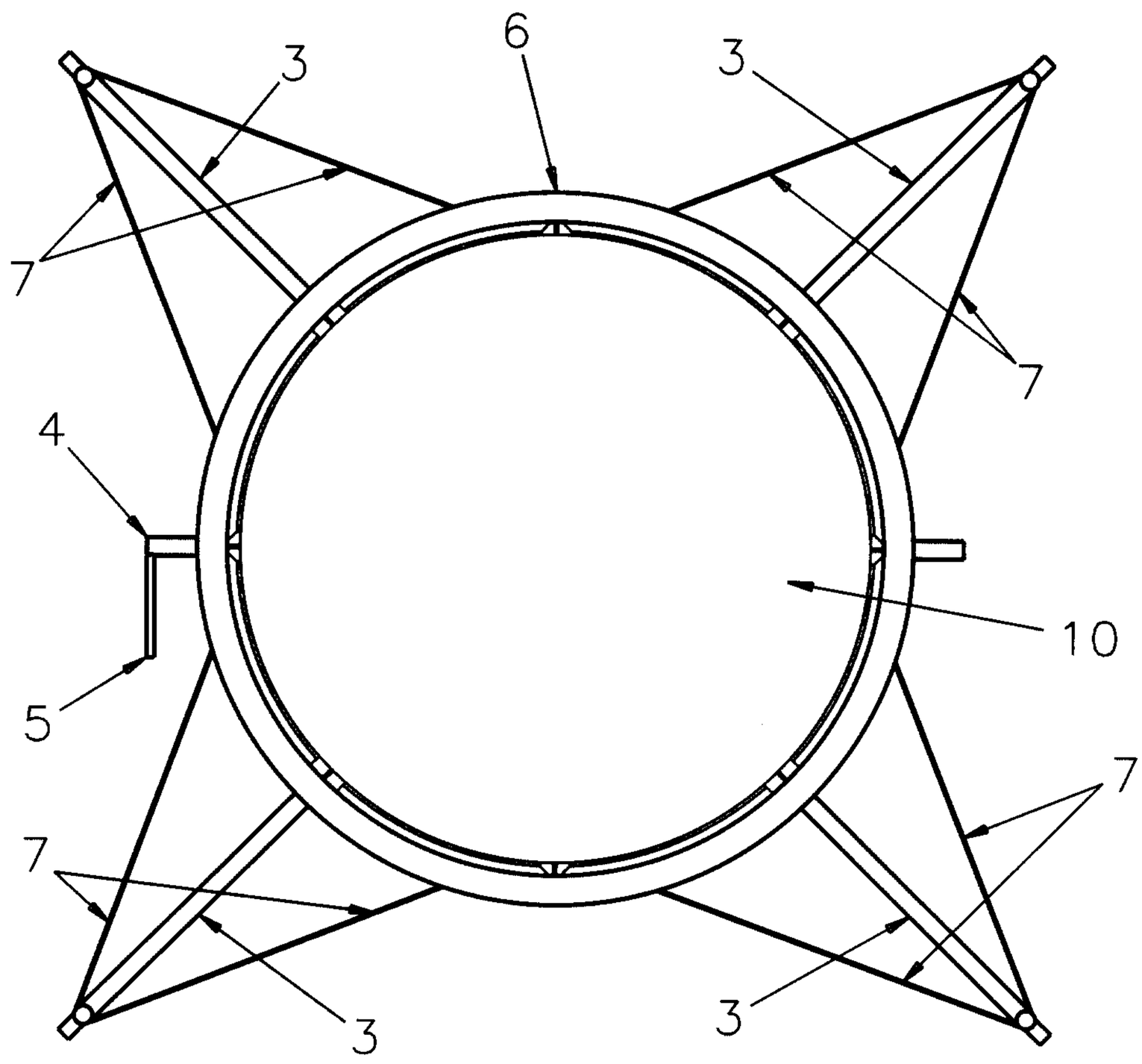

Figure 3