Nov. 12, 1957 C. J. COBERLY 2,812,721

WELL PUMP

Original Filed Dec. 1, 1949 2 Sheets-Sheet 1

FIG. 2.

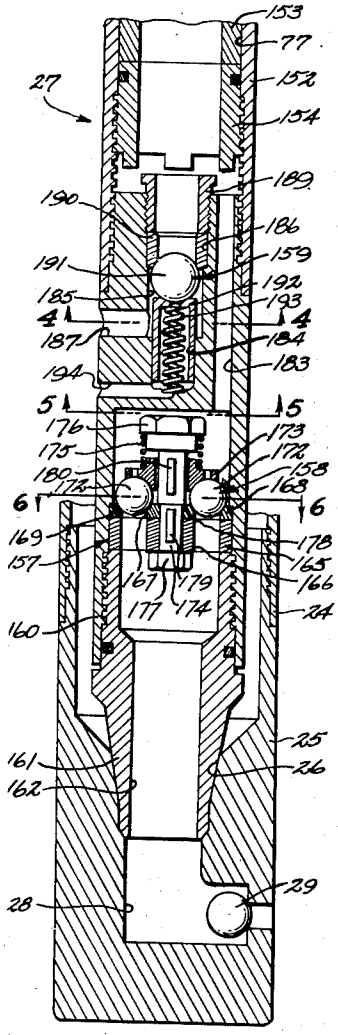

FIG. 1.

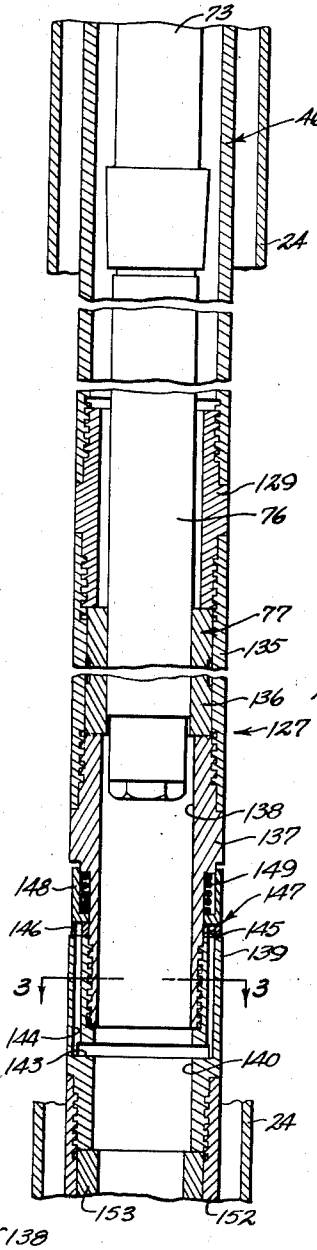

FIG. 4.

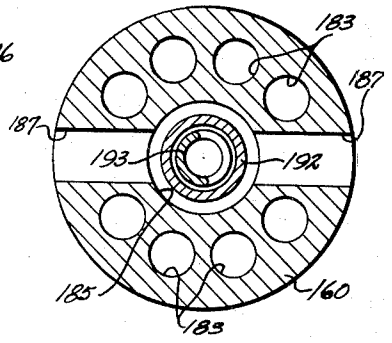

FIG. 5.

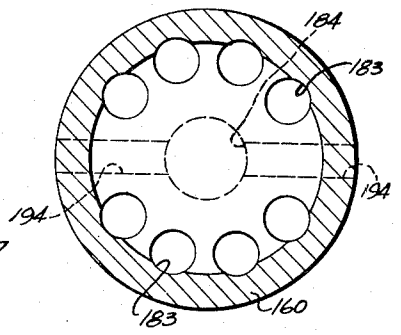

FIG. 6.

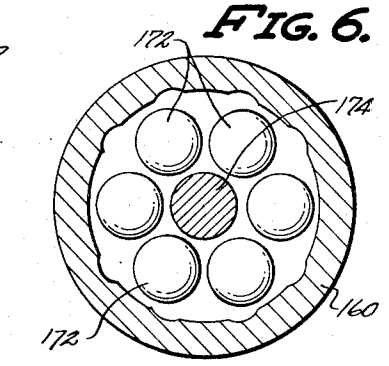

FIG. 3.

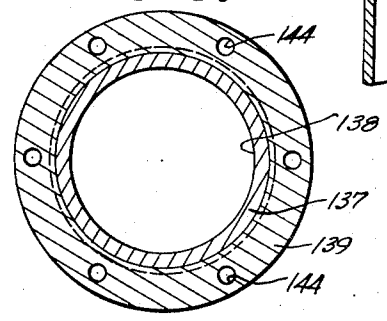

INVENTOR.
CLARENCE J. COBERLY
BY HIS ATTORNEYS.
HARRIS, KIECH, FOSTER & HARRIS

Nov. 12, 1957 C. J. COBERLY 2,812,721

WELL PUMP

Original Filed Dec. 1, 1949 2 Sheets-Sheet 2

FIG. 9.

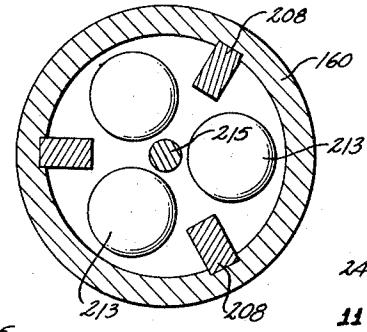

FIG. 7.

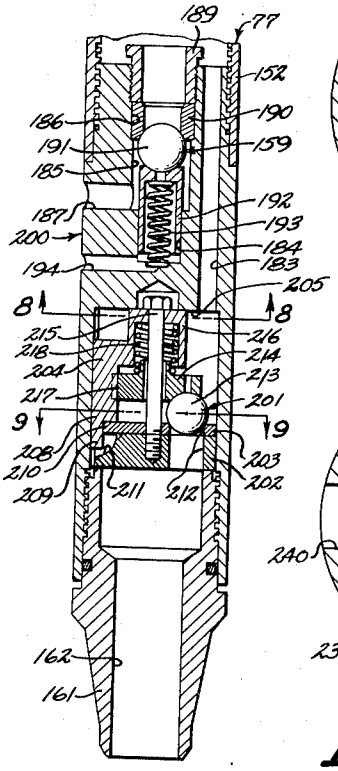

FIG. 11.

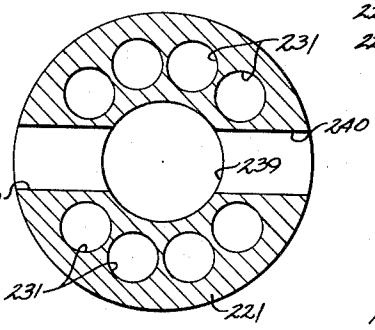

FIG. 10.

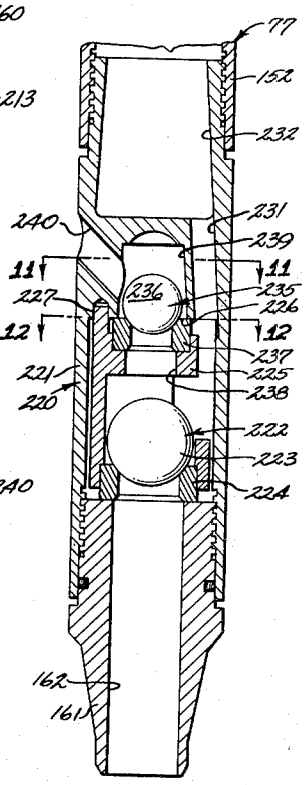

FIG. 12.

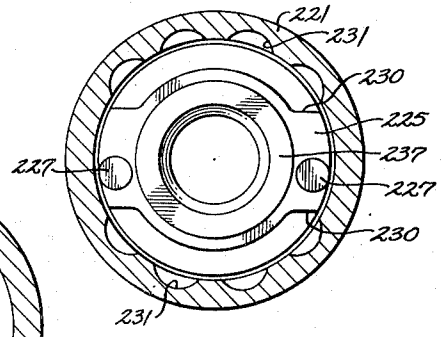

FIG. 8.

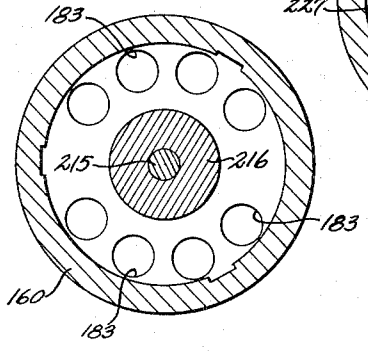

INVENTOR.
CLARENCE J. COBERLY
BY HIS ATTORNEYS.
HARRIS, KIECH, FOSTER & HARRIS

United States Patent Office 2,812,721 Patented Nov. 12, 1957

2,812,721

WELL PUMP

Clarence J. Coberly, San Marino, Calif., assignor, by mesne asisgnments, to Kobe, Inc., Huntington Park, Calif., a corporation of California

Original application December 1, 1949, Serial No. 130,533, now Patent No. 2,703,585, dated March 8, 1955. Divided and this application June 7, 1954, Serial No. 435,026

7 Claims. (Cl. 103—203)

The invention disclosed and claimed herein relates in general to pumps of the reciprocating type, the present application being a division of my copending application Serial No. 130,533, filed December 1, 1949, now Patent No. 2,703,585, issued March 8, 1955.

The present invention relates more particularly to well pumps, and especially to pumps for pumping oil and other fluids from oil wells. Such a pump includes a pump unit having therein a pump piston which is reciprocable in a pump cylinder to draw well fluid into the pump cylinder from the well and to discharge such well fluid therefrom as production fluid into a production tubing set in the well and leading upwardly to the surface.

An important object of the invention is to provide a pump cylinder defined by a liner assembly which forms a separate unit structurally independent of other parts of the pump.

Another important object of the invention is to provide a pump having means for purging the pump cylinder of gas during the pumping stroke of the pump piston so as to increase the volumetric efficiency of the pump.

A further object is to provide a pump having a main discharge valve for the well fluid being pumped and having an auxiliary discharge valve through which the pump cylinder is purged of gas.

Another object is to provide a pump having an intake and discharge valve assembly which is structurally independent of the other parts of the pump.

Another object is to provide a pump having a multiple-ball intake valve for the well fluid.

Other objects of the invention are to provide a pump having a single-ball discharge valve and a multiple-ball intake valve, and to provide a pump having a single ball-intake valve and a single ball discharge valve.

Another object is to provide a pump having intake and discharge valves of the ball type which operate without springs.

The foregoing objects of the invention and the advantages suggested thereby, together with various other objects and advantages which will become evident, may be attained with the exemplary embodiments illustrated in the accompanying drawings, which are for the purpose of illustration only, and described in detail hereinafter. Referring to the drawings:

Figs. 1 and 2 are vertical sectional views of a pump unit of the invention, Fig. 2 being a downward continuation of Fig. 1;

Fig. 3 is a transverse sectional view taken along the broken line 3—3 of Fig. 1 of the drawings;

Figs. 4, 5 and 6 are transverse sectional views respectively taken along the broken lines 4—4, 5—5 and 6—6 of Fig. 2 of the drawings;

Fig. 7 is a vertical sectional view similar to Fig. 2 of the drawings but illustrating another embodiment of an intake and discharge valve assembly of the invention;

Figs. 8 and 9 are transverse sectional views respectively taken along the broken lines 8—8 and 9—9 of Fig. 7 of the drawings;

Fig. 10 is a vertical sectional view similar to Fig. 2 of

the drawings but illustrating still another embodiment of an intake and discharge valve assembly of the invention; and

Figs. 11 and 12 are transverse sectional views respectively taken along the broken lines 11—11 and 12—12 of Fig. 10 of the drawings.

Referring particularly to Figs. 1 and 2 of the drawings, the numeral 24 designates a production tubing for pumped fluid, such as oil, which extends downwardly into an oil well and which is provided at its lower end with an intake fitting 25. The intake fitting provides a tapered seat 26 for a pump 27 which embodies the invention, and is provided with an intake passage 28 therethrough for conveying well fluid from the well to the intake of the pump. A check valve 29 prevents outflow through the passage 28.

The pump 27 includes an upper housing 46 containing a reciprocable actuator 73 for a pump piston 76 disposed in a pump cylinder 77. The last includes an upper sleeve 135 which is threaded onto the lower end of a fitting 129 connected to the lower end of the upper housing 46. An upper sectional liner 136 defines the pump cylinder 77 and is disposed in the sleeve 135 and is seated at its upper end against the lower end of the fitting 129, the sections of the upper liner being clamped in the sleeve 135 between the lower end of the fitting 129 and the upper end of a fitting 137 threaded into the lower end of the sleeve 135. This provides a unitary pump cylinder and liner assembly, which is a feature of the invention.

The pump piston 76 is in fluid-tight, slidable engagement with the internal wall of the upper sectional liner 136, the internal diameter of this liner being less than that of a bore 138 through the fitting 137 so that a small annular clearance obtains between the pump piston and the wall of the bore when the piston is disposed therein. Threaded onto the lower end of the fitting 137 is another fitting 139 having a bore 140 therethrough of substantially the same diameter as the bore 138. The fitting 139 is provided with an internal annular groove 143 which communicates with the bore 140 therethrough and which communicates with longitudinal passages 144, Figs. 1 and 3, extending to the upper end of the fitting 139. The longitudinal passages 144 communicate at their upper ends with ports 145 in an annular valve seat 146 which forms part of an auxiliary discharge valve 147 for purging the upper end of the pump cylinder 77 of gas as will be discussed in more detail hereinafter. The auxiliary discharge valve 147 includes an annular valve member 148 which is adapted to seat on the valve seat 146 (which is silver soldered or otherwise fastened to the fitting 139) to close the ports 145 therein and which is biased toward a seated position by a compression spring 149.

Threaded onto the lower end of the fitting 139 is a lower sleeve 152 containing a lower liner 153 which is clamped between the fitting 139 and a tubular insert 154, Fig. 2, threaded into the lower end of the lower sleeve 152. This construction provides a unitary pump cylinder and liner assembly, which is a feature of the invention. The pump piston 76 makes a loose, slidable fit with the lower liner 153 to permit gas to reach the auxiliary valve 147.

Threaded into the lower end of the lower sleeve 152 below the insert 154 for retaining the lower liner 153 is a unitary intake and discharge valve assembly 157 which includes an intake valve 158 and a main discharge valve 159 the intake and discharge valve assembly including a valve body 160 having an intake member 161 threaded into its lower end. The intake member 161 is tapered externally to engage the tapered pump seat 26 and is provided with an intake passage 162 which communicates with the intake passage 28 when the pump 27 is in its operating position.

Seated on the upper end of the intake member 161 is a disc 165 having longitudinal passages 166 therethrough

which register at their lower ends with the intake passage 162 and at their upper ends with ports 167 in a valve seat disc 168 forming part of the intake valve 158, the discs 165 and 168 being clamped between the intake member 161 and an internal shoulder 169 in the valve body 160. The intake valve 158 includes a plurality of ball valves 172 adapted to engage the valve seat disc 168 and respectively adapted to close the ports 167 therethrough, the ball valves 172 being engaged by a follower 173 which is slidable axially on a bolt 174 and which is biased downwardly to seat the ball valves 172 by a compression spring 175 seated against the head 176 of the bolt. The bolt 174 extends through the discs 165 and 168 and has a nut 177 threaded on its lower end, the discs 165 and 168 being clamped between the nut 177 and an external shoulder 178 on the bolt. Rotation of the bolt 174 relative to the discs 165 and 168 is prevented by a key 179, or other suitable means, and rotation of the follower 173 relative to the bolt 174 is prevented by ribs 180 on the bolt which fit into complementary grooves in the follower. This permits axial movement of the follower, but prevents rotational movement thereof. With this construction, the ball valves 172 are always properly aligned with the ports 167 through the valve seat disc 168.

The valve body 160 is provided with a plurality of longitudinal passages 183, as best shown in Figs. 4 and 5 of the drawings, through which well fluid entering the valve body through the intake valve 158 may enter the lower end of the pump cylinder 77.

The valve body 160 is provided with a bore 184 having counterbores 185 and 186 associated therewith, the counterbore 186 communicating with the pump cylinder 77 and the counterbore 185 communicating with a pair of lateral discharge passages 187, as best shown in Fig. 4 of the drawings. The lateral discharge passages 187 communicate with the production tubing 24. Disposed in the counterbore 186 is an annular valve seat 190 which forms part of the main discharge valve 159, the valve seat 190 being clamped between the base wall of the counterbore 186 and a tubular insert 189 threaded into this counterbore. The main discharge valve 159 includes a ball valve 191 which is adapted to engage the annular valve seat 190, the ball valve being engaged by a cup-shaped follower 192 which is slidable in the bore 184. A compression spring 193 is disposed within the cup-shaped follower 192 to bias the ball valve 191 toward a seated position wherein it engages the valve seat 190. Lateral bleed passages 194 communicate with the bore 184 beneath the follower 192, as best shown in Fig. 5 of the drawings.

It will be apparent that, during the upstroke of the pump piston 76, well fluid is drawn into the pump cylinder 77 through the intake valve 158, the latter opening automatically in response to the decreased pressure in the pump cylinder resulting from upward movement of the pump piston therein. The auxiliary and main discharge valves 147 and 159 remain closed due to the actions of their respective springs 149 and 193 and due to the difference in fluid pressure between the production tubing 24 and the pump cylinder during the upstroke of the pump piston, the interior of the pump cylinder being substantially at well pressure during the upstroke.

Referring to Fig. 1 of the drawings, it will be noted that, during the subsequent downstroke of the pump piston, fluid may escape from the pump cylinder 77 below the pump piston 76 by way of the auxiliary discharge valve 147. This is due to the fact that, as previously discussed, the bores 138 and 140 through the fittings 137 and 139 are larger than the pump piston. At the same time, a large part of the fluid in the pump cylinder is discharged into the production tubing 24 through the main discharge valve 159. It will be noted that the auxiliary and main discharge valves open automatically in response to the increased fluid pressure within the pump cylinder 77, the intake valve 158 closing automatically in response to such increased pressure within the pump cylinder and in response to the action of its spring 175.

The function of the auxiliary discharge valve 147 is to purge the pump cylinder 77 of free gas which may be present in the pump cylinder 77, such free gas normally occupying the upper portion of the pump cylinder. Thus, during the downstroke of the pump piston, such free gas is discharged through the auxiliary discharge valve into the production tubing. The provision of the auxiliary discharge valve 147 represents an important feature of the invention since, by permitting the pump cylinder to be purged of free gas, it considerably increases the volumetric efficiency of the pump, i. e., the ratio of the volume of fluid discharged to the displacement volume of the pump cylinder. As will be apparent, if the auxiliary discharge valves 147 were omitted, any free gas in the upper portion of the pump cylinder 77 would be displaced into and fill the lower end of the pump cylinder and the various passages above the intake valve 158 and the main discharge valve 159 upon completion of the downstroke of the pump piston. Subsequently, during the upstroke of the pump piston, such gas would expand to fill a substantial portion of the pump cylinder with gas before a sufficient reduction in pressure occurred to permit the intake valve 158 to open to admit additional well fluid. Thus, by purging the gas so that the space below the pump piston 76 is substantially filled with liquid at the end of the downstroke, the volumetric efficiency is materially increased.

Referring now to Figs. 7 to 9 of the drawings, I show an intake and discharge valve assembly 200 which is similar to the assembly 157 except that it includes an intake valve 201 of different construction than the intake valve 158, all other components being substantially identical and being identified by the same reference numerals. The intake valve includes a disc 202 which is seated on the upper end of the intake member 161 and includes a valve seat disc 203 which is seated on the disc 202. Seated on the valve seat disc 203 is a member 204 which engages at its upper end a wall 205 of the valve body 160. The discs 202 and 203 and the member 204 are clamped between the wall 205 and the intake member 161. As best shown in Fig. 9 of the drawing, the member 204 is provided with portions 208 which are set in grooves in the valve body to prevent rotation of the member 204 relative to the valve body. Downward extensions 209 of the portions 208 are disposed in notches 210 and 211 in the discs 203 and 202, respectively, to prevent rotation of the discs relative to the valve body.

The discs 202 and 203 are provided with a plurality, shown as three, registering passages 212 therethrough which provide fluid communication between the intake passage 162 in the intake member 161 and the longitudinal passages 183 in the valve body 160 which lead to the lower end of the pump cylinder 77. The passages 212 are adapted to be closed by ball valves 213 which form part of the intake valve 201 and which are adapted to seat on the valve seat disc 203, the ball valves being engaged by a follower 214 which is axially movable on a bolt 215 extending through a portion 216 of the member 204 and threaded into the disc 202. The follower 214 is provided with notches 217, only one of which is visible in Fig. 7 of the drawings, which receive the portions 208 of the member 204 to prevent rotation of the follower. This construction insures that the ball valves 213 are always properly aligned with the passages 212 through the discs 202 and 203. A compression spring 218 disposed between the follower 214 and the portion 216 of the member 204 is employed to bias the ball valves 213 toward seated positions. The operation of the intake and discharge valve assembly 200 is similar to that of the intake and discharge valve assembly 157 and will not be described in detail.

Referring now to Figs. 10 to 12 of the drawings, the numeral 220 designates an intake and discharge valve as-

sembly which performs the same function as the assemblies **157** and **200**, an advantage of the assembly **220** being that its employs no springs and relies entirely on the actions of fluid pressure and gravity. The valve assembly **220** includes a valve body **221** which is adapted to be threaded at its upper end into the lower sleeve **152** of the pump cylinder 77 and which is adapted to be threaded at its lower end onto the intake member **161**. The valve assembly **220** includes an intake valve **222** comprising a single ball valve **223** which is adapted to engage an annular valve seat **224**, the ball valve **223** being located above the valve seat **224** so that action of gravity tends to seat it, and being located between the pump cylinder 77 and the valve seat so that an increase in fluid pressure in the pump cylinder above the fluid pressure obtaining in the intake passage **162** in the intake member **161** tends to seat it. Thus, no spring is necessary to seat the ball valve **223**. The annular valve seat **224** is clamped between the intake member **161** and a member **225** which, in turn, is clamped between the valve seat **224** and a wall **226** of the valve body **221** through an annular valve seat **237**. Rotation of the member **225** is prevented by cylindrical projections **227** thereon which are inserted in complementary recesses in the wall **226**, as shown in Figs. 10 and 12 of the drawings.

As shown in Fig. 10 and as best shown in Fig. 12, the member **225** cooperates with the valve body **221** to provide a pair of arcuate channels **230** through which fluid may flow from the intake valve **222** upwardly into longitudinal passages **231** in the valve body. The passages **231** communicate at their upper ends with a chamber **232** which communicates with the lower end of the pump cylinder **77**.

The valve assembly **220** also includes a main discharge valve **235** comprising a single ball valve **236** which is adapted to engage the aforementioned annular valve seat **237**, the latter being clamped between the member **225** and the wall **226**. The lower end of the annular valve seat **237** communicates with the arcuate channels **230** through a passage **238** in the member **225**. The ball valve **236** is disposed in a chamber **239** in the valve body **221**, which chamber communicates with the production tubing **24** through a pair of inclined lateral passages **240**, as shown in Figs. 10 and 11 of the drawings. It will be noted that the ball valve **236** is located above the valve seat **237** so that the action of gravity tends to seat this ball valve. The ball valve **236** is also located between the production tubing **24** and the valve seat **237** so that any reduction in pressure in the pump cylinder **77** below the production column pressure results in the application to the ball valve **236** of a fluid pressure differential tending to seat it.

It is thought that the operation of the intake and discharge valve assembly **220** will be apparent without further description.

Although I have disclosed exemplary embodiments of my invention for purposes of illustration, it will be understood that various changes, modifications and substitutions may be incorporated in such embodiments without departing from the spirit of the invention.

I claim as my invention:

1. In a well pump, the combination of: a pump cylinder having a main discharge passage adjacent the lower end thereof and an auxiliary discharge passage above said main discharge passage; a pump piston reciprocable in said pump cylinder, said pump piston being in fluid-tight engagement with said pump cylinder above said auxiliary discharge passage and there being a clearance between said pump piston and said pump cylinder below said auxiliary discharge passage so that said auxiliary discharge passage is always in communication with said pump cylinder below said pump piston; a main discharge valve in said main discharge passage, said main discharge valve permitting outward flow from said pump cylinder, but preventing reverse flow; and an auxiliary discharge valve in said auxiliary discharge passage, said auxiliary discharge valve also permitting only outward flow from said pump cylinder.

2. A well pump as defined in claim 1 wherein said auxiliary discharge passage communicates with an enlarged intermediate portion of said pump cylinder, said pump piston bridging said enlarged intermediate portion of said pump cylinder as it moves downwardly from said upper end of said pump cylinder toward said lower end thereof.

3. In a well pump the combination of: a pump cylinder having axially aligned upper and lower bores, having a main discharge passage communicating therewith adjacent the lower end of said lower bore, and having an auxiliary discharge passage communicating therewith adjacent the lower end of said upper bore and adjacent the upper end of said lower bore; a pump piston reciprocable in said pump cylinder and engageable with the wall of said upper bore in a fluid-tight manner, there being a clearance between said pump piston and the wall of said lower bore so that said auxiliary discharge passage is always in fluid communication with said pump cylinder below said pump piston; an outwardly-opening main discharge valve in said main discharge passage; and an outwardly-opening auxiliary discharge valve in said auxiliary discharge passage, said auxiliary discharge valve permitting the escape of fluid from said pump cylinder during downward movement of said pump piston.

4. A well pump as defined in claim 3 wherein said pump cylinder includes: a sleeve; an upper liner in said sleeve defining said upper bore; a lower liner in said sleeve spaced vertically downwardly from said upper liner and defining said lower bore; and means in said sleeve and engaging the ends of said upper and lower liners for maintaining same in said sleeve in said vertically spaced relation.

5. A well pump as defined in claim 3 wherein said auxiliary discharge valve includes an annular valve seat member between said upper and lower bores, an annular valve member engageable with said annular valve seat member to close said auxiliary discharge passage, and resilient means for biasing said annular valve member into engagement with said annular valve seat member.

6. In a well pump, the combination of: a generally vertical pump cylinder having a main discharge passage therein adjacent the lower end thereof and having an auxiliary discharge passage therein above the lower end thereof; a pump piston reciprocable in said pump cylinder, said pump piston being movable between an upper position adjacent the upper end of said pump cylinder and a lower position adjacent the lower end thereof; a main discharge valve in said main discharge passage and carried by said pump cylinder, said main discharge valve opening outwardly relative to said pump cylinder so as to permit outward flow only from said pump cylinder; and an auxiliary discharge valve in said auxiliary discharge passage and carried by said pump cylinder, said auxiliary discharge valve also opening outwardly relative to said pump cylinder so as to permit only outward flow from said pump cylinder.

7. A well pump as defined in claim 6 including means providing continuous fluid communication between said auxiliary discharge passage and said pump cylinder below said pump piston for any position of said pump piston in said pump cylinder.

References Cited in the file of this patent

UNITED STATES PATENTS

1,605,114	Johnson	Nov. 2, 1926
1,992,402	Stevenson	Feb. 26, 1935
2,019,969	Holmes	Nov. 5, 1935
2,081,222	Coberly	May 25, 1937
2,081,223	Coberly	May 25, 1937
2,229,541	Zublin	Jan. 21, 1941
2,263,144	Scott	Nov. 18, 1941
2,746,431	Tebbetts	May 22, 1956