(12) INTERNATIONAL APPLICATION PUBLISHED UNDER THE PATENT COOPERATION TREATY (PCT)

(19) World Intellectual Property Organization
International Bureau

(43) International Publication Date
24 December 2020 (24.12.2020)

WIPO | PCT

(10) International Publication Number
WO 2020/256985 A1

(51) International Patent Classification:
H04N 5/357 (2011.01) *A61B 5/00* (2006.01)

(21) International Application Number:
PCT/US2020/036623

(22) International Filing Date:
08 June 2020 (08.06.2020)

(25) Filing Language: English

(26) Publication Language: English

(30) Priority Data:
62/864,223 20 June 2019 (20.06.2019) US
16/743,273 15 January 2020 (15.01.2020) US

(71) Applicant: **ETHICON LLC** [US/US]; #475 Street C, Suite 401, Los Frailes Industrial Park, Guaynabo, PR 00969 (US).

(72) Inventors: **TALBERT, Joshua, D.**; 3158 E. Old Ridge Cr., Cottonwood Heights, UT 84121 (US). **WICHERN, Donald, M.**; 6261 South 2125 East, Ogden, UT 84403 (US).

(74) Agent: **EDWARDS, Terrence, J.**; TechLaw Ventures, PLLC, 3290 West Mayflower Ave, Lehi, UT 84043 (US).

(81) Designated States *(unless otherwise indicated, for every kind of national protection available)*: AE, AG, AL, AM, AO, AT, AU, AZ, BA, BB, BG, BH, BN, BR, BW, BY, BZ, CA, CH, CL, CN, CO, CR, CU, CZ, DE, DJ, DK, DM, DO, DZ, EC, EE, EG, ES, FI, GB, GD, GE, GH, GM, GT, HN, HR, HU, ID, IL, IN, IR, IS, JO, JP, KE, KG, KH, KN, KP, KR, KW, KZ, LA, LC, LK, LR, LS, LU, LY, MA, MD, ME, MG, MK, MN, MW, MX, MY, MZ, NA, NG, NI, NO, NZ, OM, PA, PE, PG, PH, PL, PT, QA, RO, RS, RU, RW, SA, SC, SD, SE, SG, SK, SL, ST, SV, SY, TH, TJ, TM, TN, TR, TT, TZ, UA, UG, US, UZ, VC, VN, WS, ZA, ZM, ZW.

(84) Designated States *(unless otherwise indicated, for every kind of regional protection available)*: ARIPO (BW, GH, GM, KE, LR, LS, MW, MZ, NA, RW, SD, SL, ST, SZ, TZ, UG, ZM, ZW), Eurasian (AM, AZ, BY, KG, KZ, RU, TJ, TM), European (AL, AT, BE, BG, CH, CY, CZ, DE, DK, EE, ES, FI, FR, GB, GR, HR, HU, IE, IS, IT, LT, LU, LV, MC, MK, MT, NL, NO, PL, PT, RO, RS, SE, SI, SK, SM, TR), OAPI (BF, BJ, CF, CG, CI, CM, GA, GN, GQ, GW, KM, ML, MR, NE, SN, TD, TG).

Published:
— *with international search report (Art. 21(3))*

(54) Title: NOISE AWARE EDGE ENHANCEMENT IN A PULSED FLUORESCENCE IMAGING SYSTEM

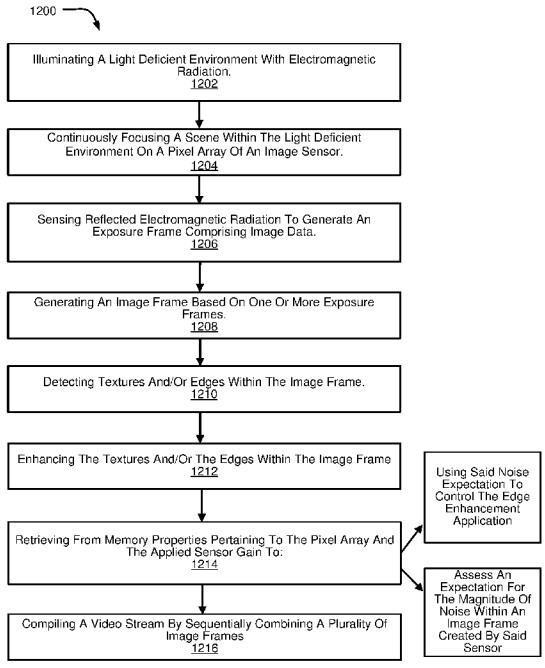

FIG. 12

(57) Abstract: Fluorescence imaging with reduced fixed pattern noise is disclosed. A method includes actuating an emitter to emit a plurality of pulses of electromagnetic radiation and sensing reflected electromagnetic radiation resulting from the plurality of pulses of electromagnetic radiation with a pixel array of an image sensor to generate a plurality of exposure frames. The method includes applying edge enhancement to edges within an exposure frame of the plurality of exposure frames. The method is such that at least a portion of the plurality of pulses of electromagnetic radiation emitted by the emitter comprises one or more of electromagnetic radiation having a wavelength from about 795 nm to about 815 nm.

WO 2020/256985 A1

NOISE AWARE EDGE ENHANCEMENT IN A PULSED FLUORESCENCE IMAGING SYSTEM

TECHNICAL FIELD

[0001] This disclosure is directed to digital imaging and is particularly directed to fluorescence imaging in a light deficient environment.

BACKGROUND

[0002] Advances in technology have provided advances in imaging capabilities for medical use. An endoscope may be used to look inside a body and examine the interior of an organ or cavity of the body. Endoscopes are used for investigating a patient's symptoms, confirming a diagnosis, or providing medical treatment. A medical endoscope may be used for viewing a variety of body systems and parts such as the gastrointestinal tract, the respiratory tract, the urinary tract, the abdominal cavity, and so forth. Endoscopes may further be used for surgical procedures such as plastic surgery procedures, procedures performed on joints or bones, procedures performed on the neurological system, procedures performed within the abdominal cavity, and so forth.

[0003] In some instances of endoscopic imaging, it may be beneficial or necessary to view a space in color. A digital color image includes at least three layers, or "color channels," that cumulatively form an image with a range of hues. Each of the color channels measures the intensity and chrominance of light for a spectral band. Commonly, a digital color image includes a color channel for red, green, and blue spectral bands of light (this may be referred to as a Red Green Blue or RGB image). Each of the red, green, and blue color channels include brightness information for the red, green, or blue spectral band of light. The brightness information for the separate red, green, and blue layers are combined to create the color image. Because a color image is made up of separate layers, a conventional digital camera image sensor includes a color filter array that permits red, green, and blue visible light wavelengths to hit selected pixel sensors. Each individual pixel sensor element is made sensitive to red, green, or blue wavelengths and will only return image data for that wavelength. The image data from the total array of pixel sensors is combined to generate the RGB image. The at least three distinct types of pixel sensors consume significant physical space such that the complete pixel array cannot fit in the small distal end of an endoscope.

[0004] Because a traditional image sensor cannot fit in the distal end of an endoscope, the image sensor is traditionally located in a handpiece unit of an endoscope that is held by an endoscope operator and is not placed within the body cavity. In such an endoscope, light is transmitted along the length of the endoscope from the handpiece unit to the distal end of the endoscope. This configuration has significant limitations. Endoscopes with this configuration are delicate and can be easily misaligned or damaged when bumped or impacted during regular use. This can significantly degrade the quality of the images and necessitate that the endoscope be frequently repaired or replaced.

[0005] The traditional endoscope with the image sensor placed in the handpiece unit is further limited to capturing only color images. However, in some implementations, it may be desirable to capture images with fluorescence image data in addition to color image data. Fluorescence is the emission of light by a substance that has absorbed light or other electromagnetic radiation. Certain fluorescent materials "glow" or emit a distinct color that is visible to the human eye when the fluorescent material is subjected to ultraviolet light or other wavelengths of electromagnetic radiation. Certain fluorescent materials will cease to glow nearly immediately when the radiation source stops.

[0006] Fluorescence occurs when an orbital electron of a molecule, atom, or nanostructure is excited by light or other electromagnetic radiation, and then relaxes to its ground state by emitting a photon from the excited state. The

specific frequencies of electromagnetic radiation that excite the orbital electron, or are emitted by the photon during relaxation, are dependent on the atom, molecule, or nanostructure. Fluorescence imaging has numerous practical applications, including mineralogy, gemology, medicine, spectroscopy for chemical sensors, detecting biological processes or signals, and others. Fluorescence can be used in biochemistry and medicine as a non-destructive means for tracking or analyzing biological molecules. Some fluorescent reagents or dyes can be configured to attach to certain types of tissue and thereby draw attention to that type of tissue.

[0007] However, fluorescence imaging requires specialized emissions of electromagnetic radiation and specialized imaging sensors capable of reading the specific relaxation wavelength for a specific fluorescent reagent. Different reagents or dyes are sensitive to different wavelengths of electromagnetic radiation and emit different wavelengths of electromagnetic radiation when fluoresced. A fluorescent imaging system may be highly specialized and tuned for a certain reagent or dye. Such imaging systems are useful for limited applications and are not capable of fluorescing more than one reagent or structure during a single imaging session. It is very costly to use multiple distinct imaging systems that are each configured for fluorescing a different reagent. Additionally, it may be desirable to administer multiple fluorescent reagents in a single imaging session and view the multiple reagents in a single overlaid image.

[0008] In light of the foregoing, described herein are systems, methods, and devices for fluorescent imaging in a light deficient environment. Such systems, methods, and devices may provide multiple datasets for identifying critical structures in a body and providing precise and valuable information about the body cavity.

BRIEF DESCRIPTION OF THE DRAWINGS

[0009] Non-limiting and non-exhaustive implementations of the disclosure are described with reference to the following figures, wherein like reference numerals refer to like parts throughout the various views unless otherwise specified. Advantages of the disclosure will become better understood with regard to the following description and accompanying drawings where:

[0010] FIG.1 is a schematic view of a system for digital imaging in a light deficient environment with a paired emitter and pixel array;

[0011] FIG. 2 is a system for providing illumination to a light deficient environment for endoscopic imaging;

[0012] FIG. 2A is a schematic diagram of complementary system hardware;

[0013] FIGS. 3A to 3D are illustrations of the operational cycles of a sensor used to construct an exposure frame;

[0014] FIG. 4A is a graphical representation of the operation of an embodiment of an electromagnetic emitter;

[0015] FIG. 4B is a graphical representation of varying the duration and magnitude of the emitted electromagnetic pulse to provide exposure control;

[0016] FIG. 5 is a graphical representation of an embodiment of the disclosure combining the operational cycles of a sensor, the electromagnetic emitter, and the emitted electromagnetic pulses of FIGS. 3A-4B, which demonstrate the imaging system during operation;

[0017] FIG. 6A is a schematic diagram of a process for recording a video with full spectrum light over a period of time from t(0) to t(1);

[0018] FIG. 6B is a schematic diagram of a process for recording a video by pulsing portioned spectrum light over a period of time from t(0) to t(1);

[0019] FIGS. 7A-7E illustrate schematic views of the processes over an interval of time for recording a frame of video for both full spectrum light and partitioned spectrum light;

[0020] FIG. 8 is a schematic diagram of a process flow to be implemented by a controller or image signal processor for generating a video stream with RGB image frames and fluorescence imaging data overlaid on the RGB image frame;

[0021] FIG. 9 is a schematic diagram of a process flow for applying super resolution and color motion artifact correction processes to image data that may include luminance, chrominance, and hyperspectral data for generating a YCbCr or RGB image with fluorescence imaging data overlaid thereon;

[0022] FIG. 10 is a graphical representation of the shape of luminance $\boldsymbol{y_i}$ of pixel, and the shape of the filtered version $\boldsymbol{f_i}$ of the luminance, and the shape of the difference plane $\boldsymbol{d_i}$;

[0023] FIG. 11 is a graphical representation of how $\boldsymbol{\alpha}$ might be construed to depend upon the modulus of $\boldsymbol{d_i}$;

[0024] FIG. 12 is a schematic flow chart diagram of a method for implementing edge enhancement processes on an image frame;

[0025] FIG. 13 is a schematic diagram of a pattern reconstruction process for generating an RGB image with fluorescence imaging data overlaid thereon by pulsing partitioned spectrums of light;

[0026] FIGS. 14A-14C illustrate a light source having a plurality of emitters;

[0027] FIG. 15 illustrates a single optical fiber outputting via a diffuser at an output to illuminate a scene in a light deficient environment;

[0028] FIG. 16 illustrates a portion of the electromagnetic spectrum divided into a plurality of different sub-spectrums which may be emitted by emitters of a light source in accordance with the principles and teachings of the disclosure;

[0029] FIG. 17 is a schematic diagram illustrating a timing sequence for emission and readout for generating an image frame comprising a plurality of exposure frames resulting from differing partitions of pulsed light;

[0030] FIG. 18 illustrates an imaging system including a single cut filter for filtering wavelengths of electromagnetic radiation;

[0031] FIG. 19 illustrates an imaging system comprising a multiple cut filter for filtering wavelengths of electromagnetic radiation;

[0032] FIGS. 20A and 20B illustrate a perspective view and a side view, respectively, of an implementation of an imaging sensor having a plurality of pixel arrays for producing a three-dimensional image, wherein the plurality of pixel arrays and the image sensor are built on a plurality of substrates;

[0033] FIGS. 21A and 21B illustrate an implementation having a plurality of pixel arrays for producing a three-dimensional image in accordance with the principles and teachings of the disclosure; and

[0034] FIGS. 22A and 22B illustrate a perspective view and a side view, respectively, of an implementation of an imaging sensor built on a plurality of substrates, wherein a plurality of pixel columns forming the pixel array are located on the first substrate and a plurality of circuit columns are located on a second substrate and showing an electrical connection and communication between one column of pixels to its associated or corresponding column of circuitry.

DETAILED DESCRIPTION

[0035] Disclosed herein are systems, methods, and devices for digital imaging that may be primarily suited to medical applications such as medical endoscopic imaging. An embodiment of the disclosure is an endoscopic system for fluorescence and/or color imaging in a light deficient environment.

[0036] Conventional endoscopes are designed such that the image sensor is placed at a proximal end of the device within a handpiece unit. This configuration requires that incident light travel the length of the endoscope by way of precisely coupled optical elements. The precise optical elements can easily be misaligned during regular use, and this can lead to image distortion or image loss. Embodiments of the disclosure place an image sensor within a distal end of the endoscope itself. This provides greater optical simplicity when compared with implementations known in the art. However, an acceptable solution to this approach is by no means trivial and introduces its own set of engineering challenges, not least of which that the image sensor must fit within a highly constrained area.

[0037] The imaging systems disclosed herein place aggressive constraints on the size of the image sensor. This enables the image sensor to be placed in a distal end of an endoscope and thereby enables the corresponding benefits of improved optical simplicity and increased mechanical robustness for the endoscope. However, placing these aggressive constraints on the image sensor area results in fewer and/or smaller pixels and can degrade image quality. An embodiment of the disclosure overcomes this challenge by incorporating a monochrome image sensor with minimal peripheral circuitry, connection pads, and logic. The imaging systems disclosed herein provide means for extending the dynamic range, sensor sensitivity, and spatial resolution of resultant images while still decreasing the overall size of the image sensor through noise aware edge enhancement.

[0038] For digital imaging systems, the final quality of a digital image depends on the engineering details of the electronic capture process that was used to generate the image. The perceived quality of an image is dependent on the signal to noise ratio (SNR), dynamic range (DR), spatial resolution, perception of visible unnatural artifacts, perception of spatial distortion, and color fidelity of the image. Each of these factors can be negatively impacted by decreasing the overall size of the image sensor. Therefore, in an effort to increase the perceived quality of a resultant image frame, traditional cameras known in the art include multiple image sensors or include an enlarged image sensor. For example, high-end cameras that can produce high resolution images typically include at least three monochrome sensors that are precisely coupled in an elaborate arrangement of prisms and filters. Another traditional solution is to use a single sensor with individual pixel-sized color filters fabricated on to the image sensor in a mosaic arrangement. The most popular mosaic arrangement is the Bayer pattern. An image sensor with a Bayer pattern can be inexpensive to fabricate but cannot achieve the image quality realized by the three-image sensor solution implemented in high-end cameras. An additional undesirable side effect of the Bayer pattern is that the color segmentation pattern introduces artifacts in the resultant image frames, and these artifacts can be especially noticeable around black and white edges.

[0039] One traditional approach to decreasing the size of the image sensor is to increase the number of pixels in the pixel array and reduce the size of the individual pixels. However, smaller pixels naturally have lower signal capacity. The lower signal capacity reduces the dynamic range of data captured by the pixels and reduces the maximum possible signal to noise ratio. Decreasing the area of an individual pixel reduces the sensitivity of the pixel not only in proportion with the capture area of the pixel but to a greater degree. The loss of sensitivity for the pixel may be compensated by widening the aperture, but this leads to a shallower depth of field and shallower depth of focus. The shallower depth of field impacts the resolution of the resultant image and can lead to greater spatial distortion. Additionally, smaller pixels are more challenging to manufacture consistently, and this may result in greater defect rates.

[0040] In light of the deficiencies associated with decreasing the capture area of the pixels, disclosed herein are systems, methods, and devices for reducing pixel count and bolstering image resolution by other means. In an embodiment, a monochrome image sensor is used with “color agnostic” pixels in the pixel array. The color information

is determined by capturing independent exposure frames in response to pulses of different wavelengths of electromagnetic radiation. The alternative pulses may include red, green, and blue wavelengths for generating an RGB image frame consisting of a red exposure frame, a green exposure frame, and a blue exposure frame. The image frame may further include data from a fluorescence exposure frame overlaid on the RGB image frame. The fluorescence excitation pulse may include one or more pulses of electromagnetic radiation for fluorescing a reagent or dye. In an embodiment, the fluorescence excitation emission includes one or more of electromagnetic radiation having a wavelength from about 770 nm to about 790 nm and/or from about 795 nm to about 815 nm. Alternating the wavelengths of the pulsed electromagnetic radiation allows the full pixel array to be exploited and avoids the artifacts introduced by Bayer pattern pixel arrays.

[0041] In an embodiment, each pulse or grouping of pulses of electromagnetic radiation results in an exposure frame sensed by the pixel array. A plurality of exposure frames may be combined to generate an image frame. The image frame may include, for example, a red exposure frame generated in response to a red pulse, a green exposure frame generated in response to a green pulse, a blue exposure frame generated in response to a blue pulse, and a fluorescence exposure frame generated in response to a fluorescence excitation pulse. The red, green, blue, and fluorescence exposure frames can be combined to generate a single RGB image frame with fluorescence data overlaid thereon. This method results in increased dynamic range and spatial resolution in the resultant image frame. However, this method can introduce motion blur because the multiple exposure frames making up the image frame are captured over time. Additionally, because the independent exposure frames supply different color components, the image frame can have unnatural colored effects that may be particularly visible in the vicinity of large edges. In light of the foregoing, the systems, methods, and devices disclosed herein correct for motion introduced by frame-wise color switching.

[0042] In an embodiment, a method is executed on an image to improve the perceived quality of the image. The method is deployed to perform noise aware edge enhancement on the image that separates true edge and texture information from random noise. The method includes extracting luminance data from the image and detecting edges of the image. The edges of the image may be detected by deploying the Canny approach, the unsharp mask method, or some other suitable means. The method includes applying a gain factor to the edges of the image and merging the extracted luminance data with the edge data that has been modified by the applied gain factor. The method may be deployed to generated improved RGB color images with increased perceived resolution.

[0043] In some instances, it is desirable to generate endoscopic imaging with multiple data types or multiple images overlaid on one another. For example, it may be desirable to generate a color (Red Green Blue "RGB") image that further includes fluorescence imaging data overlaid on the RGB image. An overlaid image of this nature may enable a medical practitioner or computer program to identify critical body structures based on the fluorescence imaging data. Historically, this would require the use of multiple sensor systems including an image sensor for color imaging and one or more additional image sensors for fluorescence imaging. In such systems, the multiple image sensors would have multiple types of pixel sensors that are each sensitive to distinct ranges of electromagnetic radiation. In systems known in the art, this includes the three separate types of pixel sensors for generating an RGB color image along with additional pixel sensors for generating the fluorescence image data at different wavelengths of the electromagnetic spectrum. These multiple different pixel sensors consume a prohibitively large physical space and cannot be located at a distal tip of the endoscope. In systems known in the art, the camera or cameras are not placed at the distal tip of the endoscope and are instead placed in an endoscope handpiece or robotic unit. This introduces numerous disadvantages and causes the

endoscope to be very delicate. The delicate endoscope may be damaged and image quality may be degraded when the endoscope is bumped or impacted during use. Considering the foregoing, disclosed herein are systems, methods, and devices for endoscopic imaging in a light deficient environment. The systems, methods, and devices disclosed herein provide means for employing multiple imaging techniques in a single imaging session while permitting one or more image sensors to be disposed in a distal tip of the endoscope.

Fluorescence Imaging

[0044] The systems, methods, and devices disclosed herein provide means for generating fluorescence imaging data in a light deficient environment. The fluorescence imaging data may be used to identify certain materials, tissues, components, or processes within a body cavity or other light deficient environment. In certain embodiments, fluorescence imaging is provided to a medical practitioner or computer-implemented program to enable the identification of certain structures or tissues within a body. Such fluorescence imaging data may be overlaid on black-and-white or RGB images to provide additional information and context.

[0045] Fluorescence is the emission of light by a substance that has absorbed light or other electromagnetic radiation. Certain fluorescent materials may "glow" or emit a distinct color that is visible to the human eye when the fluorescent material is subjected to ultraviolet light or other wavelengths of electromagnetic radiation. Certain fluorescent materials will cease to glow nearly immediately when the radiation source stops.

[0046] Fluorescence occurs when an orbital electron of a molecule, atom, or nanostructure is excited by light or other electromagnetic radiation, and then relaxes to its ground state by emitting a photon from the excited state. The specific frequencies of electromagnetic radiation that excite the orbital electron, or are emitted by the photon during relaxation, are dependent on the particular atom, molecule, or nanostructure. In most cases, the light emitted by the substance has a longer wavelength, and therefore lower energy, than the radiation that was absorbed by the substance. However, when the absorbed electromagnetic radiation is intense, it is possible for one electron to absorb two photons. This two-photon absorption can lead to emission of radiation having a shorter wavelength, and therefore higher energy, than the absorbed radiation. Additionally, the emitted radiation may also be the same wavelength as the absorbed radiation.

[0047] Fluorescence imaging has numerous practical applications, including mineralogy, gemology, medicine, spectroscopy for chemical sensors, detecting biological processes or signals, and so forth. Fluorescence may particularly be used in biochemistry and medicine as a non-destructive means for tracking or analyzing biological molecules. The biological molecules, including certain tissues or structures, may be tracked by analyzing the fluorescent emission of the biological molecules after being excited by a certain wavelength of electromagnetic radiation. However, relatively few cellular components are naturally fluorescent. In certain implementations, it may be desirable to visualize a certain tissue, structure, chemical process, or biological process that is not intrinsically fluorescent. In such an implementation, the body may be administered a dye or reagent that may include a molecule, protein, or quantum dot having fluorescent properties. The reagent or dye may then fluoresce after being excited by a certain wavelength of electromagnetic radiation. Different reagents or dyes may include different molecules, proteins, and/or quantum dots that will fluoresce at particular wavelengths of electromagnetic radiation. Thus, it may be necessary to excite the reagent or dye with a specialized band of electromagnetic radiation to achieve fluorescence and identify the desired tissue, structure, or process in the body.

[0048] Fluorescence imaging may provide valuable information in the medical field that may be used for diagnostic purposes and/or may be visualized in real-time during a medical procedure. Specialized reagents or dyes may be administered to a body to fluoresce certain tissues, structures, chemical processes, or biological processes. The fluorescence of the reagent or dye may highlight body structures such as blood vessels, nerves, particular organs, and so forth. Additionally, the fluorescence of the reagent or dye may highlight conditions or diseases such as cancerous cells or cells experiencing a certain biological or chemical process that may be associated with a condition or disease. The fluorescence imaging may be used in real-time by a medical practitioner or computer program for differentiating between, for example, cancerous and non-cancerous cells during a surgical tumor extraction. The fluorescence imaging may further be used as a non-destructive means for tracking and visualizing over time a condition in the body that would otherwise not be visible by the human eye or distinguishable in an RGB image.

[0049] The systems, methods, and devices for generating fluorescence imaging data may be used in coordination with reagents or dyes. Some reagents or dyes are known to attach to certain types of tissues and fluoresce at specific wavelengths of the electromagnetic spectrum. In an implementation, a reagent or dye is administered to a patient that is configured to fluoresce when activated by certain wavelengths of light. The endoscopic imaging system disclosed herein is used to excite and fluoresce the reagent or dye. The fluorescence of the reagent or dye is captured by the endoscopic imaging system to aid in the identification of tissues or structures in the body cavity. In an implementation, a patient is administered a plurality of reagents or dyes that are each configured to fluoresce at different wavelengths and/or provide an indication of different structures, tissues, chemical reactions, biological processes, and so forth. In such an implementation, the endoscopic imaging system emits each of the applicable wavelengths to fluoresce each of the applicable reagents or dyes. This may negate the need to perform individual imaging procedures for each of the plurality of reagents or dyes.

[0050] Imaging reagents can enhance imaging capabilities in pharmaceutical, medical, biotechnology, diagnostic, and medical procedure industries. Many imaging techniques such as X-ray, computer tomography (CT), ultrasound, magnetic resonance imaging (MRI), and nuclear medicine, mainly analyze anatomy and morphology and are unable to detect changes at the molecular level. Fluorescent reagents, dyes, and probes, including quantum dot nanoparticles and fluorescent proteins, assist medical imaging technologies by providing additional information about certain tissues, structures, chemical processes, and/or biological processes that are present within the imaging region. Imaging using fluorescent reagents enables cell tracking and/or the tracking of certain molecular biomarkers. Fluorescent reagents may be applied for imaging cancer, infection, inflammation, stem cell biology, and others. Numerous fluorescent reagents and dyes are being developed and applied for visualizing and tracking biological processes in a non-destructive manner. Such fluorescent reagents may be excited by a certain wavelength or band of wavelengths of electromagnetic radiation. Similarly, those fluorescent reagents may emit relaxation energy at a certain wavelength or band of wavelengths when fluorescing, and the emitted relaxation energy may be read by a sensor to determine the location and/or boundaries of the reagent or dye.

[0051] In an embodiment of the disclosure, an endoscopic imaging system pulses electromagnetic radiation for exciting an electron in a fluorescent reagent or dye. The endoscopic imaging system may pulse multiple different wavelengths of electromagnetic radiation for fluorescing multiple different reagents or dyes during a single imaging session. The endoscope includes an image sensor that is sensitive to the relaxation wavelength(s) of the one or more reagents or dyes. The imaging data generated by the image sensor can be used to identify a location and boundary of

the one or more reagents or dyes. The endoscope system may further pulse electromagnetic radiation in red, green, and blue bands of visible light such that the fluorescence imaging can be overlaid on an RGB video stream.

Pulsed Imaging

[0052] Some implementations of the disclosure include aspects of a combined sensor and system design that allows for high definition imaging with reduced pixel counts in a controlled illumination environment. This is accomplished with frame-by-frame pulsing of a single-color wavelength and switching or alternating each frame between a single, different color wavelength using a controlled light source in conjunction with high frame capture rates and a specially designed corresponding monochromatic sensor. Additionally, electromagnetic radiation outside the visible light spectrum may be pulsed to enable the generation of a fluorescence image by emitting the fluorescence excitation wavelength for a fluorescent reagent or dye. The pixels may be color agnostic such that each pixel generates data for each pulse of electromagnetic radiation, including pulses for red, green, and blue visible light wavelengths along with other wavelengths used for fluorescence imaging.

[0053] For the purposes of promoting an understanding of the principles in accordance with the disclosure, reference will now be made to the embodiments illustrated in the drawings and specific language will be used to describe the same. It will nevertheless be understood that no limitation of the scope of the disclosure is thereby intended. Any alterations and further modifications of the inventive features illustrated herein, and any additional applications of the principles of the disclosure as illustrated herein, which would normally occur to one skilled in the relevant art and having possession of this disclosure, are to be considered within the scope of the disclosure claimed.

[0054] Before the structure, systems and methods for producing an image in a light deficient environment are disclosed and described, it is to be understood that this disclosure is not limited to the particular structures, configurations, process steps, and materials disclosed herein as such structures, configurations, process steps, and materials may vary somewhat. It is also to be understood that the terminology employed herein is used for the purpose of describing particular embodiments only and is not intended to be limiting since the scope of the disclosure will be limited only by the appended claims and equivalents thereof.

[0055] In describing and claiming the subject matter of the disclosure, the following terminology will be used in accordance with the definitions set out below.

[0056] It must be noted that, as used in this specification and the appended claims, the singular forms “a,” “an,” and “the” include plural referents unless the context clearly dictates otherwise.

[0057] As used herein, the terms “comprising,” “including,” “containing,” “characterized by,” and grammatical equivalents thereof are inclusive or open-ended terms that do not exclude additional, unrecited elements or method steps.

[0058] As used herein, the phrase “consisting of” and grammatical equivalents thereof exclude any element or step not specified in the claim.

[0059] As used herein, the phrase “consisting essentially of” and grammatical equivalents thereof limit the scope of a claim to the specified materials or steps and those that do not materially affect the basic and novel characteristic or characteristics of the claimed disclosure.

[0060] As used herein, the term “proximal” shall refer broadly to the concept of a portion nearest an origin.

[0061] As used herein, the term “distal” shall generally refer to the opposite of proximal, and thus to the concept of a portion farther from an origin, or a furthest portion, depending upon the context.

[0062] As used herein, color sensors or multi spectrum sensors are those sensors known to have a color filter array (CFA) thereon to filter the incoming electromagnetic radiation into its separate components. In the visual range of the electromagnetic spectrum, such a CFA may be built on a Bayer pattern or modification thereon to separate green, red and blue spectrum components of the light.

[0063] As used herein, monochromatic sensor refers to an unfiltered imaging sensor. Since the pixels are color agnostic, the effective spatial resolution is appreciably higher than for their color (typically Bayer-pattern filtered) counterparts in conventional single-sensor cameras. Monochromatic sensors may also have higher quantum efficiency because fewer incident photons are wasted between individual pixels.

[0064] As used herein, an emitter is a device that is capable of generating and emitting electromagnetic pulses. Various embodiments of emitters may be configured to emit pulses and have very specific frequencies or ranges of frequencies from within the entire electromagnetic spectrum. Pulses may comprise wavelengths from the visible and non-visible ranges. An emitter may be cycled on and off to produce a pulse or may produce a pulse with a shutter mechanism. An emitter may have variable power output levels or may be controlled with a secondary device such as an aperture or filter. An emitter may emit broad spectrum or full spectrum electromagnetic radiation that may produce pulses through color filtering or shuttering. An emitter may comprise a plurality of electromagnetic sources that act individually or in concert.

[0065] It should be noted that as used herein the term "light" is both a particle and a wavelength and is intended to denote electromagnetic radiation that is detectable by a pixel array 122 and may include wavelengths from the visible and non-visible spectrums of electromagnetic radiation. The term "partition" is used herein to mean a pre-determined range of wavelengths of the electromagnetic spectrum that is less than the entire spectrum, or in other words, wavelengths that make up some portion of the electromagnetic spectrum. As used herein, an emitter is a light source that may be controllable as to the portion of the electromagnetic spectrum that is emitted or that may operate as to the physics of its components, the intensity of the emissions, or the duration of the emission, or all the above. An emitter may emit light in any dithered, diffused, or collimated emission and may be controlled digitally or through analog methods or systems. As used herein, an electromagnetic emitter is a source of a burst of electromagnetic energy and includes light sources, such as lasers, LEDs, incandescent light, or any light source that can be digitally controlled.

[0066] Referring now to the figures, FIG. 1 illustrates a schematic diagram of a system 100 for sequential pulsed imaging in a light deficient environment. The system 100 can be deployed to generate an RGB image with fluorescence imaging data overlaid on the RGB image. The system 100 includes an emitter 102 and a pixel array 122. The emitter 102 pulses a partition of electromagnetic radiation in the light deficient environment 112 and the pixel array 122 senses instances of reflected electromagnetic radiation. The emitter 102 and the pixel array 122 work in sequence such that one or more pulses of a partition of electromagnetic radiation results in image data sensed by the pixel array 122.

[0067] It should be noted that as used herein the term "light" is both a particle and a wavelength and is intended to denote electromagnetic radiation that is detectable by a pixel array 122 and may include wavelengths from the visible and non-visible spectrums of electromagnetic radiation. The term "partition" is used herein to mean a pre-determined range of wavelengths of the electromagnetic spectrum that is less than the entire spectrum, or in other words, wavelengths that make up some portion of the electromagnetic spectrum. As used herein, an emitter is a light source that may be controllable as to the portion of the electromagnetic spectrum that is emitted or that may operate as to the physics of its components, the intensity of the emissions, or the duration of the emission, or all the above. An emitter

may emit light in any dithered, diffused, or collimated emission and may be controlled digitally or through analog methods or systems. As used herein, an electromagnetic emitter is a source of a burst of electromagnetic energy and includes light sources, such as lasers, LEDs, incandescent light, or any light source that can be digitally controlled.

[0068] A pixel array 122 of an image sensor may be paired with the emitter 102 electronically, such that the emitter 102 and the pixel array 122 are synced during operation for both receiving the emissions and for the adjustments made within the system. The emitter 102 may be tuned to emit electromagnetic radiation in the form of a laser, which may be pulsed to illuminate a light deficient environment 112. The emitter 102 may pulse at an interval that corresponds to the operation and functionality of the pixel array 122. The emitter 102 may pulse light in a plurality of electromagnetic partitions such that the pixel array receives electromagnetic energy and produces a dataset that corresponds in time with each specific electromagnetic partition. For example, FIG. 1 illustrates an implementation wherein the emitter 102 emits four different partitions of electromagnetic radiation, including red 104, green 106, blue 108, and a fluorescence excitation 110 wavelength. The fluorescence excitation 110 wavelength may include a plurality of different partitions of electromagnetic radiation that are selected to fluoresce a plurality of fluorescent reagents that are present within the light deficient environment 112. The fluorescent excitation 110 wavelength may be selected to fluoresce a particular fluorescent reagent that is present in the light deficient environment 112.

[0069] The light deficient environment 112 includes structures, tissues, and other elements that reflect a combination of red 114, green 116, and/or blue 118 light. A structure that is perceived as being red 114 will reflect back pulsed red 104 light. The reflection off the red structure results in sensed red 105 by the pixel array 122 following the pulsed red 104 emission. The data sensed by the pixel array 122 results in a red exposure frame. A structure that is perceived as being green 116 will reflect back pulsed green 106 light. The reflection off the green structure results in sensed green 107 by the pixel array 122 following the pulsed green 106 emission. The data sensed by the pixel array 122 results in a green exposure frame. A structure that is perceived as being blue 118 will reflect back pulsed blue 108 light. The reflection off the blue structure results in sensed blue 109 by the pixel array 122 following the pulsed blue 108 emission. The data sensed by the pixel array 122 results in a blue exposure frame.

[0070] When a structure is a combination of colors, the structure will reflect back a combination of the pulsed red 104, pulsed green 106, and/or pulsed blue 108 emissions. For example, a structure that is perceived as being purple will reflect back light from the pulsed red 104 and pulsed blue 108 emissions. The resulting data sensed by the pixel array 122 will indicate that light was reflected in the same region following the pulsed red 104 and pulsed blue 108 emissions. When the resultant red exposure frame and blue exposure frames are combined to form the RGB image frame, the RGB image frame will indicate that the structure is purple.

[0071] In an embodiment where the light deficient environment 112 includes a fluorescent reagent or dye or includes one or more fluorescent structures, tissues, or other elements, the pulsing scheme may include the emission of a certain fluorescence excitation wavelength. The certain fluorescence excitation wavelength may be selected to fluoresce a known fluorescent reagent, dye, or other structure. The fluorescent structure will be sensitive to the fluorescence excitation wavelength and will emit a fluorescence relaxation wavelength. The fluorescence relaxation wavelength will be sensed by the pixel array 122 following the emission of the fluorescence excitation wavelength. The data sensed by the pixel array 122 results in a fluorescence exposure frame. The fluorescence exposure frame may be combined with multiple other exposure frames to form an image frame. The data in the fluorescence exposure frame

may be overlaid on an RGB image frame that includes data from a red exposure frame, a green exposure frame, and a blue exposure frame.

[0072] In an embodiment where the light deficient environment 112 includes structures, tissues, or other materials that emit a spectral response to certain partitions of the electromagnetic spectrum, the pulsing scheme may include the emission of a hyperspectral partition of electromagnetic radiation for the purpose of eliciting the spectral response from the structures, tissues, or other materials present in the light deficient environment 112. The spectral response includes the emission or reflection of certain wavelengths of electromagnetic radiation. The spectral response can be sensed by the pixel array 122 and result in a hyperspectral exposure frame. The hyperspectral exposure frame may be combined with multiple other exposure frames to form an image frame. The data in the hyperspectral exposure frame may be overlaid on an RGB image frame that includes data from a red exposure frame, a green exposure frame, and a blue exposure frame.

[0073] In an embodiment, the pulsing scheme includes the emission of a laser mapping or tool tracking pattern. The reflected electromagnetic radiation sensed by the pixel array 122 following the emission of the laser mapping or tool tracking pattern results in a laser mapping exposure frame. The data in the laser mapping exposure frame may be provided to a corresponding system to identify, for example, distances between tools present in the light deficient environment 112, a three-dimensional surface topology of a scene in the light deficient environment 112, distances, dimensions, or positions of structures or objects within the scene, and so forth. This data may be overlaid on an RGB image frame or otherwise provided to a user of the system.

[0074] The emitter 102 may be a laser emitter that is capable of emitting pulsed red 104 light for generating sensed red 105 data for identifying red 114 elements within the light deficient environment 112. The emitter 102 is further capable of emitting pulsed green 106 light for generating sensed green 107 data for identifying green 116 elements within the light deficient environment. The emitter 102 is further capable of emitting pulsed blue 108 light for generating sensed blue 109 data for identifying blue 118 elements within the light deficient environment. The emitter 102 is further capable of emitting pulsed fluorescence excitation 110 wavelength(s) of electromagnetic radiation for identifying a fluorescent reagent 120 within the light deficient environment 112. The fluorescent reagent 120 is identified by exciting the fluorescent reagent 120 with the pulsed fluorescence excitation 110 light and then sensing (by the pixel array 122) the fluorescence relaxation 111 wavelength for that particular fluorescent reagent 120. The emitter 102 is capable of emitting the pulsed red 104, pulsed green 106, pulsed blue 108, and pulsed fluorescence excitation 110 wavelengths in any desired sequence.

[0075] The pixel array 122 senses reflected electromagnetic radiation. Each of the sensed red 105, the sensed green 107, the sensed blue 109, and the sensed fluorescence relaxation 111 data can be referred to as an “exposure frame.” Each exposure frame is assigned a specific color or wavelength partition, wherein the assignment is based on the timing of the pulsed color or wavelength partition from the emitter 102. The exposure frame in combination with the assigned specific color or wavelength partition may be referred to as a dataset. Even though the pixels 122 are not color-dedicated, they can be assigned a color for any given dataset based on a priori information about the emitter.

[0076] For example, during operation, after pulsed red 104 light is pulsed in the light deficient environment 112, the pixel array 122 senses reflected electromagnetic radiation. The reflected electromagnetic radiation results in an exposure frame, and the exposure frame is catalogued as sensed red 105 data because it corresponds in time with the pulsed red 104 light. The exposure frame in combination with an indication that it corresponds in time with the pulsed

red 104 light is the "dataset." This is repeated for each partition of electromagnetic radiation emitted by the emitter 102. The data created by the pixel array 122 includes the sensed red 105 exposure frame identifying red 114 components in the light deficient environment and corresponding in time with the pulsed red 104 light. The data further includes the sensed green 107 exposure frame identifying green 116 components in the light deficient environment and corresponding in time with the pulsed green 106 light. The data further includes the sensed blue 109 exposure frame identifying blue 118 components in the light deficient environment and corresponding in time with the pulsed blue 108 light. The data further includes the sensed fluorescence relaxation 111 exposure frame identifying the fluorescent reagent 120 and corresponding in time with the pulsed fluorescence excitation 110 wavelength(s) of light.

[0077] In one embodiment, three datasets representing RED, GREEN and BLUE electromagnetic pulses are combined to form a single image frame. Thus, the information in a red exposure frame, a green exposure frame, and a blue exposure frame are combined to form a single RGB image frame. One or more additional datasets representing other wavelength partitions may be overlaid on the single RGB image frame. The one or more additional datasets may represent, for example, fluorescence imaging responsive to the pulsed excitation 110 wavelength between 770 nm and 790 nm and between 795 nm and 815 nm.

[0078] It will be appreciated that the disclosure is not limited to any particular color combination or any particular electromagnetic partition, and that any color combination or any electromagnetic partition may be used in place of RED, GREEN and BLUE, such as Cyan, Magenta and Yellow; Ultraviolet; infrared; any combination of the foregoing, or any other color combination, including all visible and non-visible wavelengths, without departing from the scope of the disclosure. In the figure, the light deficient environment 112 to be imaged includes red 114, green 116, and blue 118 portions, and further includes a fluorescent reagent 120. As illustrated in the figure, the reflected light from the electromagnetic pulses only contains the data for the portion of the object having the specific color that corresponds to the pulsed color partition. Those separate color (or color interval) datasets can then be used to reconstruct the image by combining the datasets at 126. The information in each of the multiple exposure frames (*i.e.*, the multiple datasets) may be combined by a controller 124, a control unit, a camera control unit, the image sensor, an image signal processing pipeline, or some other computing resource that is configurable to process the multiple exposure frames and combine the datasets at 126. The datasets may be combined to generate the single image frame within the endoscope unit itself or offsite by some other processing resource.

[0079] FIG. 2 is a system 200 for providing illumination to a light deficient environment, such as for endoscopic imaging. The system 200 may be used in combination with any of the systems, methods, or devices disclosed herein. The system 200 includes an emitter 202, a controller 204, a jumper waveguide 206, a waveguide connector 208, a lumen waveguide 210, a lumen 212, and an image sensor 214 with accompanying optical components (such as a lens). The emitter 202 (may be generically referred to as a "light source") generates light that travels through the jumper waveguide 206 and the lumen waveguide 210 to illuminate a scene at a distal end of the lumen 212. The emitter 202 may be used to emit any wavelength of electromagnetic energy including visible wavelengths, infrared, ultraviolet, hyperspectral, fluorescence excitation, laser mapping pulsing schemes, or other wavelengths. The lumen 212 may be inserted into a patient's body for imaging, such as during a procedure or examination. The light is output as illustrated by dashed lines 216. A scene illuminated by the light may be captured using the image sensor 214 and displayed for a doctor or some other medical personnel. The controller 204 may provide control signals to the emitter 202 to control when illumination is provided to a scene. In one embodiment, the emitter 202 and controller 204 are located within a camera control unit

(CCU) or external console to which an endoscope is connected. If the image sensor 214 includes a CMOS sensor, light may be periodically provided to the scene in a series of illumination pulses between readout periods of the image sensor 214 during what is known as a blanking period. Thus, the light may be pulsed in a controlled manner to avoid overlapping into readout periods of the image pixels in a pixel array of the image sensor 214.

[0080] In one embodiment, the lumen waveguide 210 includes one or more optical fibers. The optical fibers may be made of a low-cost material, such as plastic to allow for disposal of the lumen waveguide 210 and/or other portions of an endoscope. In one embodiment, the lumen waveguide 210 is a single glass fiber having a diameter of 500 microns. The jumper waveguide 206 may be permanently attached to the emitter 202. For example, a jumper waveguide 206 may receive light from an emitter within the emitter 202 and provide that light to the lumen waveguide 210 at the location of the connector 208. In one embodiment, the jumper waveguide 106 includes one or more glass fibers. The jumper waveguide may include any other type of waveguide for guiding light to the lumen waveguide 210. The connector 208 may selectively couple the jumper waveguide 206 to the lumen waveguide 210 and allow light within the jumper waveguide 206 to pass to the lumen waveguide 210. In one embodiment, the lumen waveguide 210 is directly coupled to a light source without any intervening jumper waveguide 206.

[0081] The image sensor 214 includes a pixel array. In an embodiment, the image sensor 214 includes two or more pixel arrays for generating a three-dimensional image. The image sensor 214 may constitute two more image sensors that each have an independent pixel array and can operate independent of one another. The pixel array of the image sensor 214 includes active pixels and optical black ("OB") or optically blind pixels. The active pixels may be clear "color agnostic" pixels that are capable of sensing imaging data for any wavelength of electromagnetic radiation. The optical black pixels are read during a blanking period of the pixel array when the pixel array is "reset" or calibrated. In an embodiment, light is pulsed during the blanking period of the pixel array when the optical black pixels are being read. After the optical black pixels have been read, the active pixels are read during a readout period of the pixel array. The active pixels may be charged by the electromagnetic radiation that is pulsed during the blanking period such that the active pixels are ready to be read by the image sensor during the readout period of the pixel array.

[0082] FIG. 2A is a schematic diagram of complementary system hardware such as a special purpose or general-purpose computer. Implementations within the scope of the present disclosure may also include physical and other non-transitory computer readable media for carrying or storing computer executable instructions and/or data structures. Such computer readable media can be any available media that can be accessed by a general purpose or special purpose computer system. Computer readable media that stores computer executable instructions are computer storage media (devices). Computer readable media that carry computer executable instructions are transmission media. Thus, by way of example, and not limitation, implementations of the disclosure can comprise at least two distinctly different kinds of computer readable media: computer storage media (devices) and transmission media.

[0083] Computer storage media (devices) includes RAM, ROM, EEPROM, CD-ROM, solid state drives ("SSDs") (e.g., based on RAM), Flash memory, phase-change memory ("PCM"), other types of memory, other optical disk storage, magnetic disk storage or other magnetic storage devices, or any other medium which can be used to store desired program code means in the form of computer executable instructions or data structures and which can be accessed by a general purpose or special purpose computer.

[0084] A "network" is defined as one or more data links that enable the transport of electronic data between computer systems and/or modules and/or other electronic devices. In an implementation, a sensor and camera control

unit may be networked to communicate with each other, and other components, connected over the network to which they are connected. When information is transferred or provided over a network or another communications connection (either hardwired, wireless, or a combination of hardwired or wireless) to a computer, the computer properly views the connection as a transmission medium. Transmissions media can include a network and/or data links, which can be used to carry desired program code means in the form of computer executable instructions or data structures and which can be accessed by a general purpose or special purpose computer. Combinations of the above should also be included within the scope of computer readable media.

[0085] Further, upon reaching various computer system components, program code means in the form of computer executable instructions or data structures that can be transferred automatically from transmission media to computer storage media (devices) (or vice versa). For example, computer executable instructions or data structures received over a network or data link can be buffered in RAM within a network interface module (e.g., a "NIC"), and then eventually transferred to computer system RAM and/or to less volatile computer storage media (devices) at a computer system. RAM can also include solid state drives (SSDs or PCIx based real time memory tiered storage, such as FusionIO). Thus, it should be understood that computer storage media (devices) can be included in computer system components that also (or even primarily) utilize transmission media.

[0086] Computer executable instructions comprise, for example, instructions and data which, when executed by one or more processors, cause a general-purpose computer, special purpose computer, or special purpose processing device to perform a certain function or group of functions. The computer executable instructions may be, for example, binaries, intermediate format instructions such as assembly language, or even source code. Although the subject matter has been described in language specific to structural features and/or methodological acts, it is to be understood that the subject matter defined in the appended claims is not necessarily limited to the described features or acts described above. Rather, the described features and acts are disclosed as example forms of implementing the claims.

[0087] Those skilled in the art will appreciate that the disclosure may be practiced in network computing environments with many types of computer system configurations, including, personal computers, desktop computers, laptop computers, message processors, control units, camera control units, hand-held devices, hand pieces, multi-processor systems, microprocessor-based or programmable consumer electronics, network PCs, minicomputers, mainframe computers, mobile telephones, PDAs, tablets, pagers, routers, switches, various storage devices, and the like. It should be noted that any of the above-mentioned computing devices may be provided by or located within a brick and mortar location. The disclosure may also be practiced in distributed system environments where local and remote computer systems, which are linked (either by hardwired data links, wireless data links, or by a combination of hardwired and wireless data links) through a network, both perform tasks. In a distributed system environment, program modules may be located in both local and remote memory storage devices.

[0088] Further, where appropriate, functions described herein can be performed in one or more of: hardware, software, firmware, digital components, or analog components. For example, one or more application specific integrated circuits (ASICs) or field programmable gate arrays (FPGAs) can be programmed to carry out one or more of the systems and procedures described herein. Certain terms are used throughout the following description and Claims to refer to particular system components. As one skilled in the art will appreciate, components may be referred to by different names. This document does not intend to distinguish between components that differ in name, but not function.

[0089] FIG. 2A is a block diagram illustrating an example computing device 250. Computing device 250 may be used to perform various procedures, such as those discussed herein. Computing device 250 can function as a server, a client, or any other computing entity. Computing device 250 can perform various monitoring functions as discussed herein, and can execute one or more application programs, such as the application programs described herein. Computing device 250 can be any of a wide variety of computing devices, such as a desktop computer, a notebook computer, a server computer, a handheld computer, camera control unit, tablet computer and the like.

[0090] Computing device 250 includes one or more processor(s) 252, one or more memory device(s) 254, one or more interface(s) 256, one or more mass storage device(s) 258, one or more Input/Output (I/O) device(s) 260, and a display device 280 all of which are coupled to a bus 262. Processor(s) 252 include one or more processors or controllers that execute instructions stored in memory device(s) 254 and/or mass storage device(s) 258. Processor(s) 252 may also include various types of computer readable media, such as cache memory.

[0091] Memory device(s) 254 include various computer readable media, such as volatile memory (e.g., random access memory (RAM) 264) and/or nonvolatile memory (e.g., read-only memory (ROM) 266). Memory device(s) 254 may also include rewritable ROM, such as Flash memory.

[0092] Mass storage device(s) 258 include various computer readable media, such as magnetic tapes, magnetic disks, optical disks, solid-state memory (e.g., Flash memory), and so forth. As shown in FIG. 2, a particular mass storage device is a hard disk drive 274. Various drives may also be included in mass storage device(s) 258 to enable reading from and/or writing to the various computer readable media. Mass storage device(s) 258 include removable media 276 and/or non-removable media.

[0093] I/O device(s) 260 include various devices that allow data and/or other information to be input to or retrieved from computing device 250. Example I/O device(s) 260 include digital imaging devices, electromagnetic sensors and emitters, cursor control devices, keyboards, keypads, microphones, monitors or other display devices, speakers, printers, network interface cards, modems, lenses, CCDs or other image capture devices, and the like.

[0094] Display device 280 includes any type of device capable of displaying information to one or more users of computing device 250. Examples of display device 280 include a monitor, display terminal, video projection device, and the like.

[0095] Interface(s) 256 include various interfaces that allow computing device 250 to interact with other systems, devices, or computing environments. Example interface(s) 256 may include any number of different network interfaces 270, such as interfaces to local area networks (LANs), wide area networks (WANs), wireless networks, and the Internet. Other interface(s) include user interface 268 and peripheral device interface 272. The interface(s) 256 may also include one or more user interface elements 268. The interface(s) 256 may also include one or more peripheral interfaces such as interfaces for printers, pointing devices (mice, track pad, etc.), keyboards, and the like.

[0096] Bus 262 allows processor(s) 252, memory device(s) 254, interface(s) 256, mass storage device(s) 258, and I/O device(s) 260 to communicate with one another, as well as other devices or components coupled to bus 262. Bus 262 represents one or more of several types of bus structures, such as a system bus, PCI bus, IEEE 1394 bus, USB bus, and so forth.

[0097] For purposes of illustration, programs and other executable program components are shown herein as discrete blocks, although it is understood that such programs and components may reside at various times in different storage components of computing device 250 and are executed by processor(s) 252. Alternatively, the systems and

procedures described herein can be implemented in hardware, or a combination of hardware, software, and/or firmware. For example, one or more application specific integrated circuits (ASICs) or field programmable gate arrays (FPGAs) can be programmed to carry out one or more of the systems and procedures described herein.

[0098] FIG. 3A illustrates the operational cycles of a sensor used in rolling readout mode or during the sensor readout 300. The frame readout period may start at and may be represented by vertical line 310. The readout period 302 is represented by the diagonal or slanted line. The sensor may be read out on a row by row basis, the top of the downwards slanted edge being the sensor top row 312 and the bottom of the downwards slanted edge being the sensor bottom row 314. The time between the last row readout and the next readout period may be called the blanking period 316. It should be noted that some of the sensor pixel rows might be covered with a light shield (e.g., a metal coating or any other substantially black layer of another material type). These covered pixel rows may be referred to as optical black rows 318 and 320. Optical black rows 318 and 320 may be used as input for correction algorithms. As shown in FIG. 3A, these optical black rows 318 and 320 may be located on the top of the pixel array or at the bottom of the pixel array or at the top and the bottom of the pixel array.

[0099] FIG. 3B illustrates a process of controlling the amount of electromagnetic radiation, e.g., light, that is exposed to a pixel, thereby integrated or accumulated by the pixel. It will be appreciated that photons are elementary particles of electromagnetic radiation. Photons are integrated, absorbed, or accumulated by each pixel and converted into an electrical charge or current. An electronic shutter or rolling shutter (shown by dashed line 322) may be used to start the integration time by resetting the pixel. The light will then integrate until the next readout period. The position of the electronic shutter 322 can be moved between two readout periods 302 to control the pixel saturation for a given amount of light. It should be noted that this technique allows for a constant integration time between two different lines but introduces a delay when moving from top to bottom rows.

[0100] FIG. 3C illustrates the case where the electronic shutter 322 has been removed. In this configuration, the integration of the incoming light may start during the readout period 302 and may end at the next readout period 302, which also defines the start of the next integration.

[0101] FIG. 3D shows a configuration without an electronic shutter 322, but with a controlled and pulsed light 330 during the blanking period 316. This ensures that all rows see the same light issued from the same light pulse 330. In other words, each row will start its integration in a dark environment, which may be at the optical black back row 320 of read out frame (m) for a maximum light pulse width, and will then receive a light strobe and will end its integration in a dark environment, which may be at the optical black front row 318 of the next succeeding read out frame (m+1) for a maximum light pulse width. In the FIG. 3D example, the image generated from the light pulse will be solely available during frame (m+1) readout without any interference with frames (m) and (m+2). It should be noted that the condition to have a light pulse to be read out only in one frame and not interfere with neighboring frames is to have the given light pulse firing during the blanking period 316. Because the optical black rows 318, 320 are insensitive to light, the optical black back rows 320 time of frame (m) and the optical black front rows 318 time of frame (m+1) can be added to the blanking period 316 to determine the maximum range of the firing time of the light pulse 330.

[0102] As illustrated in the FIG. 3A, a sensor may be cycled many times to receive data for each pulsed color or wavelength (e.g., Red, Green, Blue, or other wavelength on the electromagnetic spectrum). Each cycle may be timed. In an embodiment, the cycles may be timed to operate within an interval of 16.67ms. In another embodiment, the cycles

may be timed to operate within an interval of 8.3ms. It will be appreciated that other timing intervals are contemplated by the disclosure and are intended to fall within the scope of this disclosure.

[0103] FIG. 4A graphically illustrates the operation of an embodiment of an electromagnetic emitter. An emitter may be timed to correspond with the cycles of a sensor, such that electromagnetic radiation is emitted within the sensor operation cycle and/or during a portion of the sensor operation cycle. FIG. 4A illustrates Pulse 1 at 402, Pulse 2 at 404, and Pulse 3 at 406. In an embodiment, the emitter may pulse during the readout period 302 of the sensor operation cycle. In an embodiment, the emitter may pulse during the blanking period 316 of the sensor operation cycle. In an embodiment, the emitter may pulse for a duration that is during portions of two or more sensor operational cycles. In an embodiment, the emitter may begin a pulse during the blanking period 316, or during the optical black portion 320 of the readout period 302, and end the pulse during the readout period 302, or during the optical black portion 318 of the readout period 302 of the next succeeding cycle. It will be understood that any combination of the above is intended to fall within the scope of this disclosure as long as the pulse of the emitter and the cycle of the sensor correspond.

[0104] FIG. 4B graphically represents varying the duration and magnitude of the emitted electromagnetic pulse (e.g., Pulse 1 at 412, Pulse 2 at 414, and Pulse 3 at 416) to control exposure. An emitter having a fixed output magnitude may be pulsed during any of the cycles noted above in relation to FIGS. 3D and 4A for an interval to provide the needed electromagnetic energy to the pixel array. An emitter having a fixed output magnitude may be pulsed at a longer interval of time, thereby providing more electromagnetic energy to the pixels or the emitter may be pulsed at a shorter interval of time, thereby providing less electromagnetic energy. Whether a longer or shorter interval time is needed depends upon the operational conditions.

[0105] In contrast to adjusting the interval of time the emitter pulses a fixed output magnitude, the magnitude of the emission itself may be increased to provide more electromagnetic energy to the pixels. Similarly, decreasing the magnitude of the pulse provides less electromagnetic energy to the pixels. It should be noted that an embodiment of the system may have the ability to adjust both magnitude and duration concurrently, if desired. Additionally, the sensor may be adjusted to increase its sensitivity and duration as desired for optimal image quality. FIG. 4B illustrates varying the magnitude and duration of the pulses. In the illustration, Pulse 1 at 412 has a higher magnitude or intensity than either Pulse 2 at 414 or Pulse 3 at 416. Additionally, Pulse 1 at 412 has a shorter duration than Pulse 2 at 414 or Pulse 3 at 416, such that the electromagnetic energy provided by the pulse is illustrated by the area under the pulse shown in the illustration. In the illustration, Pulse 2 at 414 has a relatively low magnitude or intensity and a longer duration when compared to either Pulse 1 at 412 or Pulse 3 at 416. Finally, in the illustration, Pulse 3 at 416 has an intermediate magnitude or intensity and duration, when compared to Pulse 1 at 412 and Pulse 2 at 414.

[0106] FIG. 5 is a graphical representation of an embodiment of the disclosure combining the operational cycles, the electromagnetic emitter, and the emitted electromagnetic pulses of FIGS. 3A-3D and 4A to demonstrate the imaging system during operation in accordance with the principles and teachings of the disclosure. As can be seen in the figure, the electromagnetic emitter pulses the emissions primarily during the blanking period 316 of the image sensor such that the pixels will be charged and ready to read during the readout period 302 of the image sensor cycle. The dashed lines in FIG. 5 represent the pulses of electromagnetic radiation (from FIG. 4A). The pulses of electromagnetic radiation are primarily emitted during the blanking period 316 of the image sensor but may overlap with the readout period 302 of the image sensor.

[0107] An exposure frame includes the data read by the pixel array of the image sensor during a readout period 302. The exposure frame may be combined with an indication of what type of pulse was emitted by the emitter prior to the readout period 302. The combination of the exposure frame and the indication of the pulse type may be referred to as a dataset. Multiple exposure frames may be combined to generate a black-and-white or RGB color image. Additionally, hyperspectral, fluorescence, and/or laser mapping imaging data may be overlaid on a black-and-white or RGB image.

[0108] In an embodiment, an exposure frame is the data sensed by the pixel array during the readout period 302 that occurs subsequent to a blanking period 316. The emission of electromagnetic radiation is emitted during the blanking period 316. In an embodiment, a portion of the emission of electromagnetic radiation overlaps the readout period 302. The blanking period 316 occurs when optical black pixels of the pixel array are being read and the readout period 302 occurs when active pixels of the pixel array are being read. The blanking period 316 may overlap the readout period 302.

[0109] FIGS. 6A and 6B illustrate processes for recording an image frame. Multiple image frames may be strung together to generate a video stream. A single image frame may include data from multiple exposure frames, wherein an exposure frame is the data sensed by a pixel array subsequent to an emission of electromagnetic radiation. FIG. 6A illustrates a traditional process that is typically implemented with a color image sensor having a color filter array (CFA) for filtering out certain wavelengths of light per pixel. FIG. 6B is a process that is disclosed herein and can be implemented with a monochromatic "color agnostic" image sensor that is receptive to all wavelengths of electromagnetic radiation.

[0110] The process illustrated in FIG. 6A occurs from time t(0) to time t(1). The process begins with a white light emission 602 and sensing white light 604. The image is processed and displayed at 606 based on the sensing at 604.

[0111] The process illustrated in FIG. 6B occurs from time t(0) to time t(1). The process begins with an emission of green light 612 and sensing reflected electromagnetic radiation 614 subsequent to the emission of green light 612. The process continues with an emission of red light 616 and sensing reflected electromagnetic radiation 618 subsequent to the emission of red light 616. The process continues with an emission of blue light 620 and sensing reflected electromagnetic radiation 622 subsequent to the emission of blue light 620. The process continues with one or more emissions of a fluorescence excitation wavelengths 624 and sensing reflected electromagnetic energy 626 subsequent to each of the one or more emissions of fluorescence excitation wavelengths of electromagnetic radiation 624. The image is processed and displayed at 628 based on each of the sensed reflected electromagnetic energy instances 614, 618, 622, and 626.

[0112] The process illustrated in FIG. 6B provides a higher resolution image and provides a means for generating an RGB image that further includes fluorescence imaging data. When partitioned spectrums of light are used, (as in FIG. 6B) a sensor can be made sensitive to all wavelengths of electromagnetic energy. In the process illustrated in FIG. 6B, the monochromatic pixel array is instructed that it is sensing electromagnetic energy from a predetermined partition of the full spectrum of electromagnetic energy in each cycle. Therefore, to form an image the sensor need only be cycled with a plurality of differing partitions from within the full spectrum of light. The final image is assembled based on the multiple cycles. Because the image from each color partition frame cycle has a higher resolution (compared with a CFA pixel array), the resultant image created when the partitioned light frames are combined also has a higher resolution. In other words, because each and every pixel within the array (instead of, at most, every second pixel in a sensor with a

CFA) is sensing the magnitudes of energy for a given pulse and a given scene, just fractions of time apart, a higher resolution image is created for each scene.

[0113] As can be seen graphically in the embodiments illustrated in FIGS. 6A and 6B between times t(0) and t(1), the sensor for the partitioned spectrum system in FIG. 6B has cycled at least four times for every one of the full spectrum system in FIG. 6A. In an embodiment, a display device (LCD panel) operates at 50-60 frames per second. In such an embodiment, the partitioned light system in FIG. 6B may operate at 200-240 frames per second to maintain the continuity and smoothness of the displayed video. In other embodiments, there may be different capture and display frame rates. Furthermore, the average capture rate could be any multiple of the display rate.

[0114] In an embodiment, it may be desired that not all partitions be represented equally within the system frame rate. In other words, not all light sources have to be pulsed with the same regularity so as to emphasize and de-emphasize aspects of the recorded scene as desired by the users. It should also be understood that non-visible and visible partitions of the electromagnetic spectrum may be pulsed together within a system with their respective data value being stitched into the video output as desired for display to a user.

[0115] An embodiment may comprise a pulse cycle pattern as follows:

i. Green pulse;
ii. Red pulse;
iii. Blue pulse;
iv. Green pulse;
v. Red pulse;
vi. Blue pulse;
vii. Fluorescence excitation pulse;
viii. (Repeat)

[0116] As can be seen in the example, a fluorescence excitation partition may be pulsed at a rate differing from the rates of the other partition pulses. This may be done to emphasize a certain aspect of the scene, with the fluorescence imaging data simply being overlaid with the other data in the video output to make the desired emphasis. It should be noted that the addition of a fluorescence partition on top of the RED, GREEN, and BLUE partitions does not necessarily require the serialized system to operate at four times the rate of a full spectrum non-serial system because every partition does not have to be represented equally in the pulse pattern. As seen in the embodiment, the addition of a partition pulse that is represented less in a pulse pattern (fluorescence excitation in the above example), would result in an increase of less than 20% of the cycling speed of the sensor to accommodate the irregular partition sampling.

[0117] In various embodiments, the pulse cycle pattern may further include any of the following wavelengths in any suitable order. Such wavelengths may be particularly suited for exciting a fluorescent reagent to generate fluorescence imaging data by sensing the relaxation emission of the fluorescent reagent based on a fluorescent reagent relaxation emission:

i. 770 ± 20 nm;
ii. 770 ± 10 nm;
iii. 770 ± 5 nm;
iv. 790 ± 20 nm;
v. 790 ± 10 nm;

vi. 790 ± 5 nm;

vii. 795 ± 20 nm;

viii. 795 ± 10 nm;

ix. 795 ± 5 nm;

x. 815 ± 20 nm;

xi. 815 ± 10 nm;

xii. 815 ± 5 nm;

xiii. 770 nm to 790 nm; and/or

xiv. 795 nm to 815 nm.

[0118] The partition cycles may be divided so as to accommodate or approximate various imaging and video standards. In an embodiment, the partition cycles may comprise pulses of electromagnetic energy in the Red, Green, and Blue spectrum as follows as illustrated best in FIGS. 7A-7D. In FIG. 7A, the different light intensities have been achieved by modulating the light pulse width or duration within the working range shown by the vertical grey dashed lines. In FIG. 7B, the different light intensities have been achieved by modulating the light power or the power of the electromagnetic emitter, which may be a laser or LED emitter, but keeping the pulse width or duration constant. FIG. 7C shows the case where both the light power and the light pulse width are being modulated, leading to greater flexibility. The partition cycles may use Cyan Magenta Yellow (CMY), infrared, ultraviolet, hyperspectral, and fluorescence using a non-visible pulse source mixed with visible pulse sources and any other color space required to produce an image or approximate a desired video standard that is currently known or yet to be developed. It should also be understood that a system may be able to switch between the color spaces on the fly to provide the desired image output quality.

[0119] In an embodiment using color spaces Green-Blue-Green-Red (as seen in FIG. 7D) it may be desirous to pulse the luminance components more often than the chrominance components because users are generally more sensitive to light magnitude differences than to light color differences. This principle can be exploited using a mono-chromatic sensor as illustrated in FIG. 7D. In FIG. 7D, green, which contains the most luminance information, may be pulsed more often or with more intensity in a (G-B-G-R-G-B-G-R…) scheme to obtain the luminance data. Such a configuration would create a video stream that has perceptively more detail, without creating and transmitting unperceivable data.

[0120] In an embodiment, duplicating the pulse of a weaker partition may be used to produce an output that has been adjusted for the weaker pulse. For example, blue laser light is considered weak relative to the sensitivity of silicon-based pixels and is difficult to produce in comparison to the red or green light, and therefore may be pulsed more often during a frame cycle to compensate for the weakness of the light. These additional pulses may be done serially over time or by using multiple lasers that simultaneously pulse to produce the desired compensation effect. It should be noted that by pulsing during a blanking period (time during which the sensor is not reading out the pixel array), the sensor is insensitive to differences/mismatches between lasers of the same kind and simply accumulates the light for the desired output. In another embodiment, the maximum light pulse range may be different from frame to frame. This is shown in FIG. 7E, where the light pulses are different from frame to frame. The sensor may be built to be able to program different blanking times with a repeating pattern of two or three or four or n frames. In FIG. 7E, four different light pulses are illustrated, and Pulse 1 may repeat for example after Pulse 4 and may have a pattern of four frames with different

blanking times. This technique can be used to place the most powerful partition on the smallest blanking time and therefore allow the weakest partition to have wider pulse on one of the next frames without the need of increasing the readout speed. The reconstructed frame can still have a regular pattern from frame to frame as it is constituted of many pulsed frames.

[0121] FIG. 8 is a schematic diagram of a process flow 800 to be implemented by a controller and/or monochrome image signal processor (ISP) for generating a video stream having RGB images with fluorescence imaging data overlaid thereon. The process flow 800 results in images having increased dynamic range and spatial resolution. The image signal processor (ISP) chain may be assembled for the purpose of generating RGB image sequences from raw sensor data, yielded in the presence of the G-R-G-B-Fluorescence light pulsing scheme. The process flow 800 may be applied for checkerboard wide dynamic range with the Y-Cb-Y-Cr pulsing scheme along with additional pulses for fluorescence imaging, fluorescence imaging, and/or laser mapping or tool tracking imaging.

[0122] In the process flow 800, the first stage is concerned with making corrections to account for any non-idealities in the sensor technology for which it is most appropriate to work in the raw data domain. At the next stage, multiple exposure frames (for example, a green exposure frame 812a, a red-blue exposure frame 812b, and a fluorescence exposure frame 812c) are buffered because each final exposure frame derives data from multiple raw frames. The frame reconstruction at 814 proceeds by sampling data from a current exposure frame and buffered exposure frames (see 812a, 812b, and/or 812c). The reconstruction process results in full color image frames in linear RGB color space that include fluorescence image data.

[0123] The process flow 800 includes receiving data from an image sensor at 802. Sensor correction calculations are performed at 804. These sensor correction calculations can be used to determine statistics at 806 such as autoexposure settings and wide dynamic range settings. The process flow 800 continues and wide dynamic range fusion is processed at 808. Wide dynamic range compression is processed at 810. The wide dynamic range compression from 810 can be fed to generate the green exposure frame 812a, the red-blue exposure frame 812, and/or the fluorescence exposure frame 812c. The process flow 800 continues and frame reconstruction is processed at 814 and then color correction is processed at 816. The process flow 800 continues and an RGB (red-green-blue) image is converted to a YCbCr (luminance-chrominance blue-chrominance red) image at 818. Edge enhancement is processed at 820 and then the YCbCr image is converted back to an RGB image at 822. Scalars are processed at 824 and gamma is processed at 826. The video is then exported at 828.

[0124] One implementation for performing edge enhancement 820 includes extracting luminance data from an image. The "image" as discussed herein may be a single exposure frame or a plurality of exposure frames that have been combined to create an image frame. The edges of the image are detected, and a gain factor is applied to the edge data. The extracted luminance data is then combined with the modified edge data with the gain factor applied thereto. One challenge with this approach is separating true edge and texture information from random noise in the image.

[0125] If the random noise in the image is enhanced, the signal to noise ratio is reduced and the perceived quality of the image is degraded. Therefore, edge enhancement 820 may include applying a threshold level of edge enhancement only when above a threshold noise distribution. Because noise increases as a function of signal, greater edge enhancement is desirable at higher signal levels. If the threshold is excessively high, then large edges may become disproportionately enhanced with respect to small transitions and textures. This can result in an unnatural cartoon-like image. Understanding the origin of the random temporal noise enables the real-time prediction of the optimal placement

of the threshold. If the local signal is known in electronic units, then the sigma of the dominance shot noise component is known exactly because the sigma of the dominant shot noise component is equal to the square root of the mean signal.

[0126] In an embodiment, the edge enhancement 820 includes continuously varying the threshold pixel-by-pixel. The determination of the threshold can be guided by an indication of the expected local noise. Continuous spatial and temporal alteration of the threshold provides the most ideal compromise between noise control and the efficacy of the edge enhancement process.

[0127] In an embodiment, the edge enhancement 820 includes extracting a pure luminance component. After the pure luminance component is extracted, there are multiple methods that can be employed to determine the location and amplitude of edges within the image. One example method may be referred to as the "unsharp mask" approach. The unsharp mask approach may be implemented in hardware or software. One other method is the Canny method, in which an edge detect operator kernel is applied to a spatially filtered version of the image. One other method is the Laplacian method, which includes detecting zero crossings in the second order derivative. One other method includes the SUSAN method.

[0128] FIG. 9 is a schematic diagram of a process flow 900 for applying the super resolution (SR) and color motion artifact correction (CMAC) processes to image data. The super resolution algorithm uses data from multiple sequential exposure frames that are combined to generate individual image frames with increased spatial resolution. The generation of the individual image frames depends upon accurate motion detection within local regions of the multiple exposure frames. In some implementations, the luminance plane is the most critical plane for determining spatial resolution. If the luminance plane is the most critical plane, then only the adjacent luminance exposure frames are combined in an embodiment. In the case of red-green-blue pulsing according to an R-G-B-G pulsing schedule, only adjacent green exposure frames are combined to generate the individual image frames having higher spatial resolution.

[0129] With respect to the discussions regarding FIG. 9, the super resolution algorithm is applied in the context of Y-Cb-Cr light pulsing. YCbCr is a family of color spaces that can be used as part of the color image pipeline in video and digital photography systems. Y' is the luminance component (may be referred to as the "luma" component) and represents the "black-and-white" or achromatic portion of the image. Cb is the blue-difference chrominance component (may be referred to as the "chroma" component) and Cr is the red-difference chrominance component. The chrominance components represent the color information in the image or video stream. Analog RGB image information can be converted into luminance and chrominance digital image information because human vision has finer spatial sensitivity to luminance (black-and-white) differences than chromatic (color) differences. Video and imaging systems can therefore store and transmit chromatic information at lower resolution and optimize perceived detail at a particular bandwidth. Y' (with the prime notation) is distinguished from Y (without the prime notation), where Y is luminance and refers to light intensity. Y'CbCr color spaces are defined by a mathematical coordinate transformation from an associated RGB color space. If the underlying RGB color space is absolute, the Y'CbCr color space is an absolute color space as well.

[0130] The systems and methods disclosed herein are not limited to any particular pulsing scheme and can be applied to YCbCr pulsing or to RGB pulsing. The super resolution algorithm may further be applied to hyperspectral and/or fluorescence image data. In an embodiment, the endoscopic imaging system disclosed herein pulses light to generate at least four types of captured frames. The captured exposure frames include a Y exposure frame that contains pure luminance information, a Cb exposure frame which contains a linear sum of Y and Cb data, and a Cr exposure frame which contains a linear sum of Y and Cr data. During frame reconstruction (*i.e.* color fusion). There may be one

full color image frame in the YCbCr color space that is generated for each luminance exposure frame at the input. The luminance data may be combined with the chrominance data from the frame prior to and the frame following the luminance frame. Note that given this pulsing sequence, the position of the Cb frame with respect to the Y frame ping-pongs between the before and after slots for alternate Y cases, as does its complementary Cr component. Therefore, the data from each captured Cb or Cr chrominance frame may be utilized in two resultant full-color image frames. The minimum frame latency may be provided by performing the color fusion process during chrominance (Cb or Cr) frame capture.

[0131] In the process flow 900, data from a sensor is input at 902. Sensor correction 904 is performed on the sensor data. The super resolution (SR) and color motion artifact correction (CMAC) algorithms are implemented at 906. The SR and CMAC processes 906 may be performed within the camera image signal processor on raw, captured sensor data. The SR and CMAC processes can be performed at 906 immediately after all digital sensor correction 904 processes are completed. The SR and CMAC processes 906 can be executed before the sensor data is fused into linear RGB or YCbCr space color images. Statistics can be exported at 908 to determine the appropriate autoexposure for the image.

[0132] Further in the process flow 900, a chrominance frame 910a and a luminance frame 910b are constructed. The luminance frame 910b is constructed based on luminance exposure frames in arrival order. The chrominance frames 910a are constructed based on chrominance (Cb and Cr) exposure frames in arrival order. The fluorescence frame 910c is constructed based on fluorescence exposure frames in arrival order. The number of exposure frames processed by the super resolution algorithm (see 906) is an optional variable. The first-in-first-out depth of the luminance frame 910b is normally odd and its size can be determined based on available processing, memory, memory-bandwidth, motion detection precision, or acceptable latency. The color motion artifact correction (CMAC) process can be performed with the minimum first-in-first-out depth of three luminance frames 910b and two chrominance frames 910a for Cb and/or Cr. The super resolution algorithm may generate better resolution by the use of five luminance frames 910b.

[0133] The image data is processed to implement frame reconstruction at 912 and edge enhancement at 914. The YCbCr image is converted to an RGB image at 916. Statistics on the RGB image can be exported at 918 to determine appropriate white balance. The appropriate white balance is applied at 920 and entered into the color correction matric at 922. Scalars 924 and gamma 926 are determined and the video is exported out at 928. The process flow 900 can be implemented in the camera image signal processor in real-time while image data is captured and received from the sensor (see 902).

[0134] FIG. 10 illustrates the shape of luminance $\boldsymbol{y_i}$ of pixel, and the shape of the filtered version $\boldsymbol{f_i}$ of the luminance, and the shape of the difference plane $\boldsymbol{d_i}$. In the unsharp mask method for detecting the edges of an image, a spatially filtered version of the luminance plane may be identified and extracted from the original image to generate a difference plane. Flat areas will have a net result of zero while transitions will result in a local bipolar signal having amplitudes that scale with spatial frequency. The spatial filter can be a Gaussian filter kernel of dimension 7x7 in one embodiment. An example Gaussian filter, *H*, is shown below:

$$\boldsymbol{H} = \frac{\mathbf{1}}{\mathbf{140}}\begin{bmatrix} \mathbf{1} & \mathbf{1} & \mathbf{2} & \mathbf{2} & \mathbf{2} & \mathbf{1} & \mathbf{1} \\ \mathbf{1} & \mathbf{2} & \mathbf{2} & \mathbf{4} & \mathbf{2} & \mathbf{2} & \mathbf{1} \\ \mathbf{2} & \mathbf{2} & \mathbf{4} & \mathbf{8} & \mathbf{4} & \mathbf{2} & \mathbf{2} \\ \mathbf{2} & \mathbf{4} & \mathbf{8} & \mathbf{16} & \mathbf{8} & \mathbf{4} & \mathbf{2} \\ \mathbf{2} & \mathbf{2} & \mathbf{4} & \mathbf{8} & \mathbf{4} & \mathbf{2} & \mathbf{2} \\ \mathbf{1} & \mathbf{2} & \mathbf{2} & \mathbf{4} & \mathbf{2} & \mathbf{1} & \mathbf{1} \\ \mathbf{1} & \mathbf{1} & \mathbf{2} & \mathbf{2} & \mathbf{2} & \mathbf{1} & \mathbf{1} \end{bmatrix}$$

[0135] If $\boldsymbol{f_i}$ is the filtered version of the luminance $\boldsymbol{y_i}$ of pixel *i*, then:

$$f_i = (H)(y_i)$$

[0136] The difference plane, d_i, is defined by:

$$d_i = y_i - f_i$$

[0137] The resultant difference plane is effectively a high-pass filtered version that may be manipulated by a gain factor before being added back to the original luminance plane. The gain factor may govern the strength of the edge enhancement.

[0138] In this particular version of an edge enhancement algorithm, the gain factor g is the product of two positive, real components referred to as α_i and β, according to:

$$g = \alpha_i \cdot \beta$$

[0139] Therefore, the final luminance representation, Y_i, is given by:

$$Y_i = y_i + \alpha_i \cdot \beta \cdot d_i$$

[0140] The α_i factor has a maximum of unity and its magnitude may be determined based on what is happening locally within the image. The β factor is a strength adjuster that may be presented to a camera operator to tune according to aesthetic taste.

[0141] To determine what α_i should be, the signal calibration may first be applied to convert the luminance plane to electronic units. The following expression can be used to compute the calibration factor, *K*, if the internal sensor properties known as the conversion gain ε and the analog-to-digital converter (ADC) voltage swing, *W*, are known, wherein *n* is the number of ADC bits and *G* is the absolute overall linear gain applied on the sensor. If *G* is in logarithm units (dB) the expression becomes:

$$K_G = \frac{W}{G \cdot \varepsilon \cdot (2^n - 1)}$$

[0142] If *G* is in logarithmic units (dB) the expression becomes:

$$K_G = \frac{W}{10^{G/20} \cdot \varepsilon \cdot (2^n - 1)}$$

[0143] If the sensor design parameters are unknown, *K* can be determined empirically by plotting photon transfer curves of noise versus signal for a broad range of gains. In this case, K_G is equal to the reciprocal of the gradient within the linear region of the graph for each gain. Once K is known, it may be used to predict the magnitude of the noise expectation, σ_i for pixel *I* based on the local filtered luminance f_i where *B* is the sensor black offset at the output and *c* is the sensor read noise.

$$\sigma_i = \frac{\sqrt{c^2 + K_G(f_i - B)}}{K_G}$$

[0144] FIG. 11 depicts an example of how α might be construed to depend upon the modulus of d_i. In this example, α_i follows a linear dependence. Other implementations could be conceived in which α_i is not linear but has some other mathematical progression between zero and any positive real number. For example:

$$\alpha_i = \begin{cases} \dfrac{(|d_i| - t_1 \cdot \sigma_i)}{(t_2 \cdot \sigma_i - t_1 \cdot \sigma_i)} \text{ for } (t_1 \cdot \sigma_i) < |d_i| < (t_2 \cdot \sigma_i) \\ 0.0 \text{ for } |d_i| < (t_1 \cdot \sigma_i) \\ 1.0 \text{ for } |d_i| > (t_2 \cdot \sigma_i) \end{cases}$$

[0145] The transition points for α_i, t_1 and t_2 would be tuned in accordance with the most aesthetically pleasing result and may depend upon the function form of α_i employed.

[0146] A similar approach is to compute the noise variance instead of the sigma and to determine $\boldsymbol{\alpha_i}$ based upon the square of the difference parameter d_i instead of the modulus. This is beneficial for an implementation in hardware because it avoids the square root calculation.

[0147] In that case, the variance expectation;

$$\boldsymbol{v_i = \frac{c^2 + K_G(f_i - B)}{K_G^2}}$$

$$\boldsymbol{\alpha_i = \begin{Bmatrix} \frac{(d_i^2 - w_1 \cdot v_i)}{(w_2 \cdot v_i - w_1 \cdot v_i)} \text{ for } (w_1 \cdot v_i) < d_i^2 < (w_2 \cdot v_i) \\ 0.0 \text{ for } d_i^2 < (w_1 \cdot v_i) \\ 1.0 \text{ for } d_i^2 > (w_2 \cdot v_i) \end{Bmatrix}}$$

[0148] with w_1 and w_2 replacing t_1 and t_2 as the two quality tuning parameters.

[0149] In practice, the implementation of real-time square root operations and division operations are non-trivial. One implementation involves multiplying by reciprocals or using precompiled lookup tables. Multiplying by reciprocals may work well if the divisor is a constant and precompiled lookup tables may work well if the range of values in the lookup tables is small.

[0150] Another implementation, which may be implemented in hardware, may use knowledge of the applied gain and resulting noise to modify the amount of edge enhancement on a per-frame basis instead of pixel by pixel. Complicated (division and square-root) operations will be dependent not on changing pixel values, but on differences in frame values.

[0151] In this case, the major enhance equation is:

$$\boldsymbol{Y_e = Y_o + D \cdot G \cdot (Yf_a - Yf_b)}$$

[0152] where Yf_a is a 7x7 gaussian blur of the image and Yf_b is a 3x3 gaussian blur of the image.

[0153] $Yf_a - Yf_b$ is an edge detection between a blurred version of the image and a less blurred version of the image. This difference is gained by the product of G and D.

[0154] G is a gain factor ranging from 0 to n, where n can be any number greater than 0 with a defined upper limit. D is a weighting factor ranging from 0 to 1. D is generated by setting twiddling factors d_{high} and d_{low}. The equation for D is:

$$\boldsymbol{D = \begin{Bmatrix} \frac{(|Yf_a - Yf_b| - d_{low})}{(d_{high} - d_{low})} \text{ for } d_{low} < |Yf_a - Yf_b| < d_{high} \\ 0.0 \text{ for } |Yf_a - Yf_b| < d_{low} \\ 1.0 \text{ for } |Yf_a - Yf_b| > d_{high} \end{Bmatrix}}$$

[0155] where d_{high} and d_{low} are set in the software. d_{high} is based on the amount of gain added to the sensor. If the gain value is low, d_{low} is low, as the gain increases, so does d_{high}. As gain and d_{high} increase, the slope of D flattens out. As a result, the enhance equation requires a greater amount of difference in the high pass filter before it will gain up the detected edge. Because gain adds noise, the system responds to high gain situations by requiring greater edge differentiation before enhancement. In low gain and low noise situations the system can interpret smaller differences as edges and enhance them appropriately.

[0156] FIG. 12 is a schematic flow chart diagram of a method 1200 for edge enhancement of a digital image. One or more steps of the method 1200 may be performed by a computing device such as an image signal processor, a controller of an endoscopic imaging system, a third-party computing system in communication with an endoscopic

imaging system, and so forth. One or more steps of the method 1200 may be executed by a component of an endoscopic imaging system such as an emitter for emitting electromagnetic radiation, a pixel array of an image sensor, an image signal processing pipeline, and so forth. Additionally, one or more steps of the method 1200 may be performed by an operator of the endoscopic imaging system such as a human operated or computer-implemented operator.

[0157] The method 1200 begins and an emitter illuminates at 1202 a light deficient environment with electromagnetic radiation. The electromagnetic radiation may include visible light, infrared light, ultraviolet light, hyperspectral wavelengths of electromagnetic radiation, a fluorescence excitation wavelength of electromagnetic radiation, and/or a laser mapping or tool tracking pattern. The method 1200 continues and a computing device continuously focuses at 1204 a scene within the light deficient environment on a pixel array of an image sensor. The image sensor may be located in a distal tip of an endoscopic imaging system. The method 1200 continues and a pixel array of an image sensor senses at 1206 reflected electromagnetic radiation to generate an exposure frame comprising image data. The method 1200 continues and a computing resource generates at 1208 an image frame based on one or more exposure frames captured by the pixel array. The method 1200 continues and a computing resource detects at 1210 textures and/or edges within the image frame. The method 1200 continues and a computing resource enhances at 1212 the textures and/or the edges within the image frame. The method 1200 continues and a computing resource retrieves from memory at 1214 properties pertaining to the pixel array and the applied sensor gain. The properties may pertain to using the noise expectation to control the application of edge enhancement processes. The properties may pertain to assessing an expectation for the magnitude of noise within an image frame created by the image sensor. The method 1200 continues and a computing resource compiles at 1216 a video stream by sequentially combining a plurality of image frames.

[0158] The method 1200 can be applied to apply edge enhancement processes to an image frame. The edge enhancement may comprise a plurality of enhancements within the original image generated by the pixel array that correspond to variations of noise due to variations in photo-signal. The degree of applied edge enhancement may be governed by a digital gain factor applied to the detected edges, which depends on expected noise. The method 1200 may include creating a three-dimensional image stream by combining the image frames of a plurality of pixel arrays disposed on a plurality of substrates that are stacked.

[0159] The method 1200 may further comprise calculating noise correction based on a combination of Poisson statistics of photon arrival and electronic noise arising from the pixel array and its readout electronics. The method 1200 may include computing the expected noise, knowing the conversion gain of each pixel within the pixel array the applied sensor gain and the voltage range of the digitizer.

[0160] The method 1200 may further include deriving an empirical determination of the expected noise from a database of laboratory experiments conducted for the pixel array. The method 1200 may include varying a level of illumination and plotting the signal in digital number (DN) versus the noise is DN^2 and recoding them into memory. The empirical determination may be repeated for a plurality of applied sensor gain settings. It will be appreciated that the method 1200 may further include measuring a gradient within the plot. It will be appreciated that in an implementation, the digital gain factor may be assessed locally for each pixel, or within a local group of pixels. In an implementation, the digital gain factor may be determined for a whole frame, based on the applied sensor gain. In an implementation, the digital gain factor may be derived from a comparison of an edge strength parameter to the expected noise located near each pixel. In an implementation, the system and method may further comprise controlling the degree of edge

enhancement and involves applying the digital gain factor to the edge strength parameter and adding the result to the luminance component of the original image.

[0161] In an implementation, the edge strength parameter may be taken to be a modulus of a difference between two spatially filtered versions of the luminance component of the original image, with different filter kernels applied to each. In an implementation, the edge strength parameter may be taken to be the modulus of the difference between one spatially filtered and one unfiltered version of the luminance component of the original frame.

[0162] FIG. 13 is a schematic diagram of a pattern reconstruction process. The example pattern illustrated in FIG. 13 includes Red, Green, Blue, and Fluorescence Excitation pulses of light that each last a duration of T1. In various embodiments, the pulses of light may be of the same duration or of differing durations. The Red, Green, Blue, and Fluorescence Excitation exposure frames are combined to generate an RGB image with fluorescence imaging data overlaid thereon. A single image frame comprising a red exposure frame, a green exposure frame, a blue exposure frame, and a fluorescence exposure frame requires a time period of 4*T1 to be generated. The time durations shown in FIG. 13 are illustrative only and may vary for different implementations. In other embodiments, different pulsing schemes may be employed. For example, embodiments may be based on the timing of each color component or frame (T1) and the reconstructed frame having a period twice that of the incoming color frame (2 x T1). Different frames within the sequence may have different frame periods and the average capture rate could be any multiple of the final frame rate.

[0163] In an embodiment, the dynamic range of the system is increased by varying the pixel sensitivities of pixels within the pixel array of the image sensor. Some pixels may sense reflected electromagnetic radiation at a first sensitivity level, other pixels may sense reflected electromagnetic radiation at a second sensitivity level, and so forth. The different pixel sensitivities may be combined to increase the dynamic range provided by the pixel configuration of the image sensor. In an embodiment, adjacent pixels are set at different sensitivities such that each cycle includes data produced by pixels that are more and less sensitive with respect to each other. The dynamic range is increased when a plurality of sensitivities are recorded in a single cycle of the pixel array. In an embodiment, wide dynamic range can be achieved by having multiple global TX, each TX firing only on a different set of pixels. For example, in global mode, a global TX1 signal is firing a set 1 of pixels, a global TX2 signal is firing a set 2 of pixel, a global TXn signal is firing a set n of pixels, and so forth.

[0164] FIGS. 14A-14C each illustrate a light source 1400 having a plurality of emitters. The emitters include a first emitter 1402, a second emitter 1404, and a third emitter 1406. Additional emitters may be included, as discussed further below. The emitters 1402, 1404, and 1406 may include one or more laser emitters that emit light having different wavelengths. For example, the first emitter 1402 may emit a wavelength that is consistent with a blue laser, the second emitter 1404 may emit a wavelength that is consistent with a green laser, and the third emitter 1406 may emit a wavelength that is consistent with a red laser. For example, the first emitter 1402 may include one or more blue lasers, the second emitter 1404 may include one or more green lasers, and the third emitter 1406 may include one or more red lasers. The emitters 1402, 1404, 1406 emit laser beams toward a collection region 1408, which may be the location of a waveguide, lens, or other optical component for collecting and/or providing light to a waveguide, such as the jumper waveguide 206 or lumen waveguide 210 of FIG. 2.

[0165] In an implementation, the emitters 1402, 1404, and 1406 emit hyperspectral wavelengths of electromagnetic radiation. Certain hyperspectral wavelengths may pierce through tissue and enable a medical practitioner to “see through” tissues in the foreground to identify chemical processes, structures, compounds, biological processes, and so

forth that are located behind the tissues in the foreground. The hyperspectral wavelengths may be specifically selected to identify a specific disease, tissue condition, biological process, chemical process, type of tissue, and so forth that is known to have a certain spectral response.

[0166] In an implementation where a patient has been administered a reagent or dye to aid in the identification of certain tissues, structures, chemical reactions, biological processes, and so forth, the emitters 1402, 1404, and 1406 may emit wavelength(s) for fluorescing the reagents or dyes. Such wavelength(s) may be determined based on the reagents or dyes administered to the patient. In such an embodiment, the emitters may need to be highly precise for emitting desired wavelength(s) to fluoresce or activate certain reagents or dyes.

[0167] In an implementation, the emitters 1402, 1404, and 1406 emit a laser mapping pattern for mapping a topology of a scene and/or for calculating dimensions and distances between objects in the scene. In an embodiment, the endoscopic imaging system is used in conjunction with multiple tools such as scalpels, retractors, forceps, and so forth. In such an embodiment, each of the emitters 1402, 1404, and 1406 may emit a laser mapping pattern such that a laser mapping pattern is projected on to each tool individually. In such an embodiment, the laser mapping data for each of the tools can be analyzed to identify distances between the tools and other objects in the scene.

[0168] In the embodiment of FIG. 14B, the emitters 1402, 1404, 1406 each deliver laser light to the collection region 1408 at different angles. The variation in angle can lead to variations where electromagnetic energy is located in an output waveguide. For example, if the light passes immediately into a fiber bundle (glass or plastic) at the collection region 1408, the varying angles may cause different amounts of light to enter different fibers. For example, the angle may result in intensity variations across the collection region 1408. Furthermore, light from the different emitters may not be homogenously mixed so some fibers may receive different amounts of light of different colors. Variation in the color or intensity of light in different fibers can lead to non-optimal illumination of a scene. For example, variations in delivered light or light intensities may result at the scene and captured images.

[0169] In one embodiment, an intervening optical element may be placed between a fiber bundle and the emitters 1402, 1404, 1406 to mix the different colors (wavelengths) of light before entry into the fibers or other waveguide. Example intervening optical elements include a diffuser, mixing rod, one or more lenses, or other optical components that mix the light so that a given fiber receive a same amount of each color (wavelength). For example, each fiber in the fiber bundle may have a same color. This mixing may lead to the same color in each fiber but may, in some embodiments, still result in different total brightness delivered to different fibers. In one embodiment, the intervening optical element may also spread out or even out the light over the collection region so that each fiber carries the same total amount of light (e.g., the light may be spread out in a top hat profile). A diffuser or mixing rod may lead to loss of light.

[0170] Although the collection region 1408 is represented as a physical component in FIG. 14A, the collection region 1408 may simply be a region where light from the emitters 1402, 1404, and 1406 is delivered. In some cases, the collection region 1408 may include an optical component such as a diffuser, mixing rod, lens, or any other intervening optical component between the emitters 1402, 1404, 1406 and an output waveguide.

[0171] FIG. 14C illustrates an embodiment of a light source 1400 with emitters 1402, 1404, 1406 that provide light to the collection region 1408 at the same or substantially same angle. The light is provided at an angle substantially perpendicular to the collection region 1408. The light source 1400 includes a plurality of dichroic mirrors including a first dichroic mirror 1410, a second dichroic mirror 1412, and a third dichroic mirror 1414. The dichroic mirrors 1410, 1412, 1414 include mirrors that reflect a first wavelength of light but transmit (or are transparent to) a second wavelength

of light. For example, the third dichroic mirror 1414 may reflect blue laser light provided by the third emitter, while being transparent to the red and green light provided by the first emitter 1402 and the second emitter 1404, respectively. The second dichroic mirror 1412 may be transparent to red light from the first emitter 1402, but reflective to green light from the second emitter 1404. If other colors or wavelengths are included dichroic mirrors may be selected to reflect light corresponding to at least one emitter and be transparent to other emitters. For example, the third dichroic mirror 1414 reflect the light form the third emitter 1406 but is to emitters "behind" it, such as the first emitter 1402 and the second emitter 1404. In embodiments where tens or hundreds of emitters are present, each dichroic mirror may be reflective to a corresponding emitter and emitters in front of it while being transparent to emitters behind it. This may allow for tens or hundreds of emitters to emit electromagnetic energy to the collection region 1408 at a substantially same angle.

[0172] Because the dichroic mirrors allow other wavelengths to transmit or pass through, each of the wavelengths may arrive at the collection region 1408 from a same angle and/or with the same center or focal point. Providing light from the same angle and/or same focal/center point can significantly improve reception and color mixing at the collection region 1408. For example, a specific fiber may receive the different colors in the same proportions they were transmitted/reflected by the emitters 1402, 1404, 1406 and mirrors 1410, 1412, 1414. Light mixing may be significantly improved at the collection region compared to the embodiment of FIG. 14B. In one embodiment, any optical components discussed herein may be used at the collection region 1408 to collect light prior to providing it to a fiber or fiber bundle.

[0173] FIG. 14C illustrates an embodiment of a light source 1400 with emitters 1402, 1404, 1406 that also provide light to the collection region 1408 at the same or substantially same angle. However, the light incident on the collection region 1408 is offset from being perpendicular. Angle 1416 indicates the angle offset from perpendicular. In one embodiment, the laser emitters 1402, 1404, 1406 may have cross sectional intensity profiles that are Gaussian. As discussed previously, improved distribution of light energy between fibers may be accomplished by creating a more flat or top-hat shaped intensity profile. In one embodiment, as the angle 1416 is increased, the intensity across the collection region 1408 approaches a top hat profile. For example, a top-hat profile may be approximated even with a non-flat output beam by increasing the angle 1416 until the profile is sufficiently flat. The top hat profile may also be accomplished using one or more lenses, diffusers, mixing rods, or any other intervening optical component between the emitters 1402, 1404, 1406 and an output waveguide, fiber, or fiber optic bundle.

[0174] FIG. 15 is a schematic diagram illustrating a single optical fiber 1502 outputting via a diffuser 1504 at an output. In one embodiment, the optical fiber 1502 has a diameter of 500 microns, a numerical aperture of 0.65, and emits a light cone 1506 of about 70 or 80 degrees without a diffuser 1504. With the diffuser 1504, the light cone 1506 may have an angle of about 110 or 120 degrees. The light cone 1506 may be a majority of where all light goes and is evenly distributed. The diffuser 1504 may allow for more even distribution of electromagnetic energy of a scene observed by an image sensor.

[0175] In one embodiment, the lumen waveguide 210 includes a single plastic or glass optical fiber of about 500 microns. The plastic fiber may be low cost, but the width may allow the fiber to carry a sufficient amount of light to a scene, with coupling, diffusion, or other losses. For example, smaller fibers may not be able to carry as much light or power as a larger fiber. The lumen waveguide 210 may include a single or a plurality of optical fibers. The lumen waveguide 210 may receive light directly from the light source or via a jumper waveguide. A diffuser may be used to broaden the light output 206 for a desired field of view of the image sensor 214 or other optical components.

[0176] Although three emitters are shown in FIGS. 14A-14C, emitters numbering from one into the hundreds or more may be used in some embodiments. The emitters may have different wavelengths or spectrums of light that they emit, and which may be used to contiguously cover a desired portion of the electromagnetic spectrum (e.g., the visible spectrum as well as infrared and ultraviolet spectrums). The emitters may be configured to emit visible light such as red light, green light, and blue light, and may further be configured to emit hyperspectral emissions of electromagnetic radiation, fluorescence excitation wavelengths for fluorescing a reagent, and/or laser mapping patterns for calculating parameters and distances between objects in a scene.

[0177] FIG. 16 illustrates a portion of the electromagnetic spectrum 1600 divided into twenty different sub-spectrums. The number of sub-spectrums is illustrative only. In at least one embodiment, the spectrum 1600 may be divided into hundreds of sub-spectrums, each with a small waveband. The spectrum may extend from the infrared spectrum 1602, through the visible spectrum 1604, and into the ultraviolet spectrum 1606. The sub-spectrums each have a waveband 1608 that covers a portion of the spectrum 1600. Each waveband may be defined by an upper wavelength and a lower wavelength.

[0178] Hyperspectral imaging incudes imaging information from across the electromagnetic spectrum 1600. A hyperspectral pulse of electromagnetic radiation may include a plurality of sub-pulses spanning one or more portions of the electromagnetic spectrum 1600 or the entirety of the electromagnetic spectrum 1600. A hyperspectral pulse of electromagnetic radiation may include a single partition of wavelengths of electromagnetic radiation. A resulting hyperspectral exposure frame includes information sensed by the pixel array subsequent to a hyperspectral pulse of electromagnetic radiation. Therefore, a hyperspectral exposure frame may include data for any suitable partition of the electromagnetic spectrum 1600 and may include multiple exposure frames for multiple partitions of the electromagnetic spectrum 1600. In an embodiment, a hyperspectral exposure frame includes multiple hyperspectral exposure frames such that the combined hyperspectral exposure frame comprises data for the entirety of the electromagnetic spectrum 1600. In an embodiment, a hyperspectral exposure frame is sensed by a pixel array in response to an emission of one or more of: electromagnetic radiation having a wavelength from about 513 nm to about 545 nm; from about 565 nm to about 585 nm; and/or from about 900 nm to about 1000 nm.

[0179] In one embodiment, at least one emitter (such as a laser emitter) is included in a light source (such as the light sources 202, 1400) for each sub-spectrum to provide complete and contiguous coverage of the whole spectrum 1600. For example, a light source for providing coverage of the illustrated sub-spectrums may include at least 20 different emitters, at least one for each sub-spectrum. In one embodiment, each emitter covers a spectrum covering 40 nanometers. For example, one emitter may emit light within a waveband from 500 nm to 540 nm while another emitter may emit light within a waveband from 540 nm to 580 nm. In another embodiment, emitters may cover other sizes of wavebands, depending on the types of emitters available or the imaging needs. For example, a plurality of emitters may include a first emitter that covers a waveband from 500 to 540 nm, a second emitter that covers a waveband from 540 nm to 640 nm, and a third emitter that covers a waveband from 640 nm to 650 nm. Each emitter may cover a different slice of the electromagnetic spectrum ranging from far infrared, mid infrared, near infrared, visible light, near ultraviolet and/or extreme ultraviolet. In some cases, a plurality of emitters of the same type or wavelength may be included to provide sufficient output power for imaging. The number of emitters needed for a specific waveband may depend on the sensitivity of a monochrome sensor to the waveband and/or the power output capability of emitters in that waveband.

[0180] The waveband widths and coverage provided by the emitters may be selected to provide any desired combination of spectrums. For example, contiguous coverage of a spectrum using very small waveband widths (e.g., 10 nm or less) may allow for highly selective hyperspectral and/or fluorescence imaging. The waveband widths may allow for selectively emitting the excitation wavelength(s) for one or more particular fluorescent reagents. Additionally, the waveband widths may allow for selectively emitting certain partitions of hyperspectral electromagnetic radiation for identifying specific structures, chemical processes, tissues, biological processes, and so forth. Because the wavelengths come from emitters which can be selectively activated, extreme flexibility for fluorescing one or more specific fluorescent reagents during an examination can be achieved. Additionally, extreme flexibility for identifying one or more objects or processes by way of hyperspectral imaging can be achieved. Thus, much more fluorescence and/or hyperspectral information may be achieved in less time and within a single examination which would have required multiple examinations, delays because of the administration of dyes or stains, or the like.

[0181] FIG. 17 is a schematic diagram illustrating a timing diagram 1700 for emission and readout for generating an image. The solid line represents readout (peaks 1702) and blanking periods (valleys) for capturing a series of exposure frames 1704-1714. The series of exposure frames 1704-1714 may include a repeating series of exposure frames which may be used for generating laser mapping, hyperspectral, and/or fluorescence data that may be overlaid on an RGB video stream. In an embodiment, a single image frame comprises information from multiple exposure frames, wherein one exposure frame includes red image data, another exposure frame includes green image data, and another exposure frame includes blue image data. Additionally, the single image frame may include one or more of hyperspectral image data, fluorescence image data, and laser mapping data. The multiple exposure frames are combined to produce the single image frame. The single image frame is an RGB image with hyperspectral imaging data. The series of exposure frames include a first exposure frame 1704, a second exposure frame 1706, a third exposure frame 1708, a fourth exposure frame 1710, a fifth exposure frame 1712, and an Nth exposure frame 1726.

[0182] Additionally, the hyperspectral image data, the fluorescence image data, and the laser mapping data can be used in combination to identify critical tissues or structures and further to measure the dimensions of those critical tissues or structures. For example, the hyperspectral image data may be provided to a corresponding system to identify certain critical structures in a body such as a nerve, ureter, blood vessel, cancerous tissue, and so forth. The location and identification of the critical structures may be received from the corresponding system and may further be used to generate topology of the critical structures using the laser mapping data. For example, a corresponding system determines the location of a cancerous tumor based on hyperspectral imaging data. Because the location of the cancerous tumor is known based on the hyperspectral imaging data, the topology and distances of the cancerous tumor may then be calculated based on laser mapping data. This example may also apply when a cancerous tumor or other structure is identified based on fluorescence imaging data.

[0183] In one embodiment, each exposure frame is generated based on at least one pulse of electromagnetic energy. The pulse of electromagnetic energy is reflected and detected by an image sensor and then read out in a subsequent readout (1702). Thus, each blanking period and readout results in an exposure frame for a specific spectrum of electromagnetic energy. For example, the first exposure frame 1704 may be generated based on a spectrum of a first one or more pulses 1716, a second exposure frame 1706 may be generated based on a spectrum of a second one or more pulses 1718, a third exposure frame 1708 may be generated based on a spectrum of a third one or more pulses 1720, a fourth exposure frame 1710 may be generated based on a spectrum of a fourth one or more pulses 1722, a fifth exposure

frame 1712 may be generated based on a spectrum of a fifth one or more pulses 1724, and an Nth exposure frame 1726 may be generated based on a spectrum of an Nth one or more pulses 1726.

[0184] The pulses 1716-1726 may include energy from a single emitter or from a combination of two or more emitters. For example, the spectrum included in a single readout period or within the plurality of exposure frames 1704-1714 may be selected for a desired examination or detection of a specific tissue or condition. According to one embodiment, one or more pulses may include visible spectrum light for generating an RGB or black and white image while one or more additional pulses are emitted to sense a spectral response to a hyperspectral wavelength of electromagnetic radiation. For example, pulse 1716 may include red light, pulse 1718 may include blue light, and pulse 1720 may include green light while the remaining pulses 1722-1726 may include wavelengths and spectrums for detecting a specific tissue type, fluorescing a reagent, and/or mapping the topology of the scene. As a further example, pulses for a single readout period include a spectrum generated from multiple different emitters (e.g., different slices of the electromagnetic spectrum) that can be used to detect a specific tissue type. For example, if the combination of wavelengths results in a pixel having a value exceeding or falling below a threshold, that pixel may be classified as corresponding to a specific type of tissue. Each frame may be used to further narrow the type of tissue that is present at that pixel (e.g., and each pixel in the image) to provide a very specific classification of the tissue and/or a state of the tissue (diseased/healthy) based on a spectral response of the tissue and/or whether a fluorescent reagent is present at the tissue.

[0185] The plurality of frames 1704-1714 is shown having varying lengths in readout periods and pulses having different lengths or intensities. The blanking period, pulse length or intensity, or the like may be selected based on the sensitivity of a monochromatic sensor to the specific wavelength, the power output capability of the emitter(s), and/or the carrying capacity of the waveguide.

[0186] In one embodiment, dual image sensors may be used to obtain three-dimensional images or video feeds. A three-dimensional examination may allow for improved understanding of a three-dimensional structure of the examined region as well as a mapping of the different tissue or material types within the region.

[0187] In an example implementation, a fluorescent reagent is provided to a patient, and the fluorescent reagent is configured to adhere to cancerous cells. The fluorescent reagent is known to fluoresce when radiated with a specific partition of electromagnetic radiation. The relaxation wavelength of the fluorescent reagent is also known. In the example implementation, the patient is imaged with an endoscopic imaging system as discussed herein. The endoscopic imaging system pulses partitions of red, green, and blue wavelengths of light to generate an RGB video stream of the interior of the patient's body. Additionally, the endoscopic imaging system pulses the excitation wavelength of electromagnetic radiation for the fluorescent reagent that was administered to the patient. In the example, the patient has cancerous cells and the fluorescent reagent has adhered to the cancerous cells. When the endoscopic imaging system pulses the excitation wavelength for the fluorescent reagent, the fluorescent reagent will fluoresce and emit a relaxation wavelength. If the cancerous cells are present in the scene being imaged by the endoscopic imaging system, then the fluorescent reagent will also be present in the scene and will emit its relaxation wavelength after fluorescing due to the emission of the excitation wavelength. The endoscopic imaging system senses the relaxation wavelength of the fluorescent reagent and thereby senses the presence of the fluorescent reagent in the scene. Because the fluorescent reagent is known to adhere to cancerous cells, the presence of the fluorescent reagent further indicates the presence of cancerous cells within the scene. The endoscopic imaging system thereby identifies the location of cancerous cells

within the scene. The endoscopic imaging system may further emit a laser mapping pulsing scheme for generating a topology of the scene and calculating dimensions for objects within the scene. The location of the cancerous cells (as identified by the fluorescence imaging data) may be combined with the topology and dimensions information calculated based on the laser mapping data. Therefore, the precise location, size, dimensions, and topology of the cancerous cells may be identified. This information may be provided to a medical practitioner to aid in excising the cancerous cells. Additionally, this information may be provided to a robotic surgical system to enable the surgical system to excise the cancerous cells.

[0188] In a further example implementation, a patient is imaged with an endoscopic imaging system to identify quantitative diagnostic information about the patient's tissue pathology. In the example, the patient is suspected or known to suffer from a disease that can be tracked with hyperspectral imaging to observe the progression of the disease in the patient's tissue. The endoscopic imaging system pulses partitions of red, green, and blue wavelengths of light to generate an RGB video stream of the interior of the patient's body. Additionally, the endoscopic imaging system pulses one or more hyperspectral wavelengths of light that permit the system to "see through" some tissues and generate imaging of the tissue that is affected by the disease. The endoscopic imaging system senses the reflected hyperspectral electromagnetic radiation to generate hyperspectral imaging data of the diseased tissue, and thereby identifies the location of the diseased tissue within the patient's body. The endoscopic imaging system may further emit a laser mapping pulsing scheme for generating a topology of the scene and calculating dimensions of objects within the scene. The location of the diseased tissue (as identified by the hyperspectral imaging data) may be combined with the topology and dimensions information that is calculated with the laser mapping data. Therefore, the precise location, size, dimensions, and topology of the diseased tissue can be identified. This information may be provided to a medical practitioner to aid in excising, imaging, or studying the diseased tissue. Additionally, this information may be provided to a robotic surgical system to enable the surgical system to excise the diseased tissue.

[0189] FIG. 18 is a schematic diagram of an imaging system 1800 having a single cut filter. The system 1800 includes an endoscope 1806 or other suitable imaging device having a light source 1808 for use in a light deficient environment. The endoscope 1806 includes an image sensor 1804 and a filter 1802 for filtering out unwanted wavelengths of light or other electromagnetic radiation before reaching the image sensor 1804. The light source 1808 transmits light that may illuminate the surface 1812 in a light deficient environment such as a body cavity. The light 1810 is reflected off the surface 1812 and passes through the filter 1802 before hitting the image sensor 1804.

[0190] The filter 1802 may be used in an implementation where a fluorescent reagent or dye has been administered. In such an embodiment, the light source 1808 emits the excitation wavelength for fluorescing the fluorescent reagent or dye. Commonly, the relaxation wavelength emitted by the fluorescent reagent or dye will be of a different wavelength than the excitation wavelength. The filter 1802 may be selected to filter out the excitation wavelength and permit only the relaxation wavelength to pass through the filter and be sensed by the image sensor 1804.

[0191] In one embodiment, the filter 1802 is configured to filter out an excitation wavelength of electromagnetic radiation that causes a reagent or dye to fluoresce such that only the expected relaxation wavelength of the fluoresced reagent or dye is permitted to pass through the filter 1802 and reach the image sensor 1804. In an embodiment, the filter 1802 filters out at least a fluorescent reagent excitation wavelength between 770 nm and 790 nm. In an embodiment, the filter 1802 filters out at least a fluorescent reagent excitation wavelength between 795 nm and 815 nm. In an embodiment, the filter 1802 filters out at least a fluorescent reagent excitation wavelength between 770 nm and 790 nm

and between 795 nm and 815 nm. In these embodiments, the filter 1802 filters out the excitation wavelength of the reagent and permits only the relaxation wavelength of the fluoresced reagent to be read by the image sensor 1804. The image sensor 1804 may be a wavelength-agnostic image sensor and the filter 1802 may be configured to permit the image sensor 1804 to only receive the relaxation wavelength of the fluoresced reagent and not receive the emitted excitation wavelength for the reagent. The data determined by the image sensor 1804 may then indicate a presence of a critical body structure, tissue, biological process, or chemical process as determined by a location of the reagent or dye.

[0192] The filter 1802 may further be used in an implementation where a fluorescent reagent or dye has not been administered. The filter 1802 may be selected to permit wavelengths corresponding to a desired spectral response to pass through and be read by the image sensor 1804. The image sensor 1804 may be a monochromatic image sensor such that pixels of the captured image that exceed a threshold or fall below a threshold may be characterized as corresponding to a certain spectral response or fluorescence emission. The spectral response or fluorescence emission, as determined by the pixels captured by the image sensor 1804, may indicate the presence of a certain body tissue or structure, a certain condition, a certain chemical process, and so forth.

[0193] FIG. 19 is a schematic diagram of an imaging system 1900 having multiple cut filters. The system 1900 includes an endoscope 1906 or other suitable imaging device having a light source 1908 for use in a light deficient environment. The endoscope 1906 includes an image sensor 1904 and two filters 1902a, 1902b. It should be appreciated that in alternative embodiments, the system 1900 may include any number of filters, and the number of filters and the type of filters may be selected for a certain purpose *e.g.,* for gathering imaging information of a particular body tissue, body condition, chemical process, and so forth. The filters 1902a, 1902b are configured for preventing unwanted wavelengths of light or other electromagnetic radiation from being sensed by the image sensor 1904. The filters 1902a, 1902b may be configured to filter out unwanted wavelengths from white light or other electromagnetic radiation that may be emitted by the light source 1908.

[0194] Further to the disclosure with respect to FIG. 18, the filters 1902a, 1902b may be used in an implementation where a fluorescent reagent or dye has been administered. The filters 1902a, 1902b may be configured for blocking an emitted excitation wavelength for the reagent or dye and permitting the image sensor 1904 to only read the relaxation wavelength of the reagent or dye. Further, the filters 1902a, 1902b may be used in an implementation where a fluorescent reagent or dye has not been administered. In such an implementation, the filters 1902a, 1902b may be selected to permit wavelengths corresponding to a desired spectral response to pass through and be read by the image sensor 1904.

[0195] The multiple filters 1902a, 1902b may each be configured for filtering out a different range of wavelengths of the electromagnetic spectrum. For example, one filter may be configured for filtering out wavelengths longer than a desired wavelength range and the additional filter may be configured for filtering out wavelengths shorter than the desired wavelength range. The combination of the two or more filters may result in only a certain wavelength or band of wavelengths being read by the image sensor 1904.

[0196] In an embodiment, the filters 1902a, 1902b are customized such that electromagnetic radiation between 513 nm and 545 nm contacts the image sensor 1904. In an embodiment, the filters 1902a, 1902b are customized such that electromagnetic radiation between 565 nm and 585 nm contacts the image sensor 1904. In an embodiment, the filters 1902a, 1902b are customized such that electromagnetic radiation between 900 nm and 1000 nm contacts the image sensor 1904. In an embodiment, the filters 1902a, 1902b are customized such that electromagnetic radiation between 425 nm and 475 nm contacts the image sensor 1904. In an embodiment, the filters 1902a, 1902b are customized such

that electromagnetic radiation between 520 nm and 545 nm contacts the image sensor 1904. In an embodiment, the filters 1902a, 1902b are customized such that electromagnetic radiation between 625 nm and 645 nm contacts the image sensor 1904. In an embodiment, the filters 1902a, 1902b are customized such that electromagnetic radiation between 760 nm and 795 nm contacts the image sensor 1904. In an embodiment, the filters 1902a, 1902b are customized such that electromagnetic radiation between 795 nm and 815 nm contacts the image sensor 1904. In an embodiment, the filters 1902a, 1902b are customized such that electromagnetic radiation between 370 nm and 420 nm contacts the image sensor 1904. In an embodiment, the filters 1902a, 1902b are customized such that electromagnetic radiation between 600 nm and 670 nm contacts the image sensor 1904. In an embodiment, the filters 1902a, 1902b are configured for permitting only a certain fluorescence relaxation emission to pass through the filters 1902a, 1902b and contact the image sensor 1904. In an embodiment, a first filter blocks electromagnetic radiation having a wavelength from about 770 nm to about 790 nm, and a second filter blocks electromagnetic radiation having a wavelength from about 795 nm to about 815 nm.

[0197] In an embodiment, the system 1900 includes multiple image sensors 1904 and may particularly include two image sensors for use in generating a three-dimensional image. The image sensor(s) 1904 may be color/wavelength agnostic and configured for reading any wavelength of electromagnetic radiation that is reflected off the surface 1912. In an embodiment, the image sensors 1904 are each color dependent or wavelength dependent and configured for reading electromagnetic radiation of a particular wavelength that is reflected off the surface 1912 and back to the image sensors 1904. Alternatively, the image sensor 1904 may include a single image sensor with a plurality of different pixel sensors configured for reading different wavelengths or colors of light, such as a Bayer filter color filter array. Alternatively, the image sensor 1904 may include one or more color agnostic image sensors that may be configured for reading different wavelengths of electromagnetic radiation according to a pulsing schedule such as those illustrated in FIGS. 5-7E, for example.

[0198] FIGS. 20A and 20B illustrate a perspective view and a side view, respectively, of an implementation of an imaging sensor 2000 having a plurality of pixel arrays for producing a three-dimensional image. The three-dimensional image sensor may be built on a plurality of substrates and may comprise the plurality of pixel arrays and other associated circuitry, wherein a plurality of pixel columns 2004a forming the first pixel array and a plurality of pixel columns 2004b forming a second pixel array are located on respective substrates 2002a and 2002b, respectively, and a plurality of circuit columns 2008a and 2008b are located on a separate substrate 2006. Also illustrated are the electrical connections and communications between columns of pixels to associated or corresponding column of circuitry.

[0199] The plurality of pixel arrays may sense information simultaneously and the information from the plurality of pixel arrays may be combined to generate a three-dimensional image. In an embodiment, an endoscopic imaging system includes two or more pixel arrays that can be deployed to generate three-dimensional imaging. The endoscopic imaging system may include an emitter for emitting pulses of electromagnetic radiation during a blanking period of the pixel arrays. The pixel arrays may be synced such that the optical black pixels are read (*i.e.*, the blanking period occurs) at the same time for the two or more pixel arrays. The emitter may emit pulses of electromagnetic radiation for charging each of the two or more pixel arrays. The two or more pixel arrays may read their respective charged pixels at the same time such that the readout periods for the two or more pixel arrays occur at the same time or at approximately the same time. In an embodiment, the endoscopic imaging system includes multiple emitters that are each individual synced with

one or more pixel arrays of a plurality of pixel arrays. Information from a plurality of pixel arrays may be combined to generate three-dimensional image frames and video streams.

[0200] FIGS. 21A and 21B illustrate a perspective view and a side view, respectively, of an implementation of a monolithic sensor 2100 having a plurality of pixel arrays for producing a three-dimensional image in accordance with the teachings and principles of the disclosure. Such an implementation may be desirable for three-dimensional image capture, wherein the two-pixel arrays 2102 and 2104 may be offset during use. In another implementation, a first pixel array 2102 and a second pixel array 2104 may be dedicated to receiving a predetermined range of wave lengths of electromagnetic radiation, wherein the first pixel array is dedicated to a different range of wavelength electromagnetic radiation than the second pixel array.

[0201] FIGS. 22A and 22B illustrate a perspective view and a side view, respectively, of an implementation of an imaging sensor 2200 built on a plurality of substrates. As illustrated, a plurality of pixel columns 2204 forming the pixel array are located on the first substrate 2202 and a plurality of circuit columns 2208 are located on a second substrate 2206. Also illustrated in the figure are the electrical connection and communication between one column of pixels to its associated or corresponding column of circuitry. In one implementation, an image sensor, which might otherwise be manufactured with its pixel array and supporting circuitry on a single, monolithic substrate/chip, may have the pixel array separated from all or a majority of the supporting circuitry. The disclosure may use at least two substrates/chips, which will be stacked together using three-dimensional stacking technology. The first 2202 of the two substrates/chips may be processed using an image CMOS process. The first substrate/chip 2202 may be comprised either of a pixel array exclusively or a pixel array surrounded by limited circuitry. The second or subsequent substrate/chip 2206 may be processed using any process and does not have to be from an image CMOS process. The second substrate/chip 2206 may be, but is not limited to, a highly dense digital process to integrate a variety and number of functions in a very limited space or area on the substrate/chip, or a mixed-mode or analog process to integrate for example precise analog functions, or a RF process to implement wireless capability, or MEMS (Micro-Electro-Mechanical Systems) to integrate MEMS devices. The image CMOS substrate/chip 2202 may be stacked with the second or subsequent substrate/chip 2206 using any three-dimensional technique. The second substrate/chip 2206 may support most, or a majority, of the circuitry that would have otherwise been implemented in the first image CMOS chip 2202 (if implemented on a monolithic substrate/chip) as peripheral circuits and therefore have increased the overall system area while keeping the pixel array size constant and optimized to the fullest extent possible. The electrical connection between the two substrates/chips may be done through interconnects, which may be wire bonds, bump and/or TSV (Through Silicon Via).

[0202] It will be appreciated that the teachings and principles of the disclosure may be used in a reusable device platform, a limited use device platform, a re-posable use device platform, or a single use/disposable device platform without departing from the scope of the disclosure. It will be appreciated that in a re-usable device platform an end-user is responsible for cleaning and sterilization of the device. In a limited use device platform, the device can be used for some specified amount of times before becoming inoperable. Typical new device is delivered sterile with additional uses requiring the end-user to clean and sterilize before additional uses. In a re-posable use device platform, a third-party may reprocess the device (e.g., cleans, packages and sterilizes) a single-use device for additional uses at a lower cost than a new unit. In a single use/disposable device platform a device is provided sterile to the operating room and used only once before being disposed of.

Examples

[0203] The following examples pertain to preferred features of further embodiments:

[0204] Example 1 is a method. The method includes actuating an emitter to emit a plurality of pulses of electromagnetic radiation and sensing reflected electromagnetic radiation resulting from the plurality of pulses of electromagnetic radiation with a pixel array of an image sensor to generate a plurality of exposure frames. The method includes applying edge enhancement to edges within an exposure frame of the plurality of exposure frames. The method is such that at least a portion of the plurality of pulses of electromagnetic radiation emitted by the emitter comprises one or more of electromagnetic radiation having a wavelength from about 795 nm to about 815 nm.

[0205] Example 2 is a method as in Example 1, further comprising: detecting the edges within the exposure frame; retrieving from memory a known conversion gain and an applied sensor gain for the pixel array; calculating a threshold magnitude of noise acceptable in the exposure frame based on the known conversion gain and the applied sensor gain for the pixel array; and adjusting a magnitude of the applied edge enhancement based on the threshold magnitude of noise acceptable in the exposure frame.

[0206] Example 3 is a method as in any of Examples 1-2, wherein applying the edge enhancement to the edges within the exposure frame comprises: extracting luminance data from the exposure frame; detecting the edges within the exposure frame; applying a gain factor to the detected edges within the image frame to generate modified edge data; and merging the luminance data and the modified edge data.

[0207] Example 4 is a method as in any of Examples 1-3, further comprising calculating expected noise for the plurality of exposure frames generated by the pixel array based on one or more of: a known conversion gain for each pixel within the pixel array, a known applied sensor gain for the pixel array, or a voltage range for a digitizer of an image processing system in electronic communication with the image sensor.

[0208] Example 5 is a method as in any of Examples 1-4, wherein applying the edge enhancement comprises applying the edge enhancement in response to the exposure frame comprising more than a threshold magnitude of noise.

[0209] Example 6 is a method as in any of Examples 1-5, wherein applying the edge enhancement comprises applying the edge enhancement on a per-pixel basis in response to a pixel comprising more than a threshold magnitude of noise, and wherein the method further comprises determining a per-pixel threshold magnitude of noise for a plurality of pixels in the pixel array based on expected local noise.

[0210] Example 7 is a method as in any of Examples 1-6, further comprising detecting the edges within the exposure frame by: applying a spatial filter to the exposure frame, wherein the spatial filter is a Gaussian filter; extracting a luminance plane from the exposure frame; generating a difference plane by subtracting the spatially filtered version of the exposure frame from the luminance plane; and detecting the edges by identifying local bipolar signals in the difference plane having amplitudes that scale with spatial frequency.

[0211] Example 8 is a method as in any of Examples 1-7, further comprising detecting the edges within the exposure frame by: applying a spatial filter to the exposure frame, wherein the spatial filter is a Gaussian filter; and applying an edge detect operator kernel to the spatially filtered version of the exposure frame.

[0212] Example 9 is a method as in any of Examples 1-8, further comprising calculating a gain factor for governing a magnitude of the edge enhancement applied to the edges within the exposure frame, wherein calculating the gain factor comprises calculating based on: voltage swing of an analog-to-digital converter (ADC) in electronic communication

with the image sensor; a known conversion gain for the pixel array; an absolute overall linear gain applied to the image sensor; and a strength adjuster setting received from a user.

[0213] Example 10 is a method as in any of Examples 1-9, further comprising calculating a gain factor for governing a magnitude of the edge enhancement applied to the edges within the exposure frame, wherein calculating the gain factor comprises: plotting a gain graph by plotting photon transfer curves of noise versus signal for a range of potential gains; identifying a calibration factor equal to the reciprocal of a gradient within a linear region of the gain graph; predicting a magnitude of noise expectation based on the calibration factor; and calculating the gain factor based on the predicted magnitude of noise expectation and a strength adjust setting received from a user.

[0214] Example 11 is a method as in any of Examples 1-10, wherein sensing the reflected electromagnetic radiation comprises sensing during a readout period of the pixel array, wherein the readout period is a duration of time when active pixels in the pixel array are read.

[0215] Example 12 is a method as in any of Examples 1-11, wherein actuating the emitter comprises actuating the emitter to emit, during a pulse duration, a plurality of sub-pulses of electromagnetic radiation having a sub-duration shorter than the pulse duration.

[0216] Example 13 is a method as in any of Examples 1-12, wherein actuating the emitter comprises actuating the emitter to emit two or more wavelengths simultaneously as a single pulse or a single sub-pulse.

[0217] Example 14 is a method as in any of Examples 1-13, wherein sensing the reflected electromagnetic radiation comprises generating a fluorescence exposure frame, and wherein the method further comprises providing the fluorescence exposure frame to a corresponding system that determines a location of a critical tissue structure within a scene based on the fluorescence exposure frame.

[0218] Example 15 is a method as in any of Examples 1-14, further comprising: receiving the location of the critical tissue structure from the corresponding system; generating an overlay frame comprising the location of the critical tissue structure; and combining the overlay frame with a color image frame depicting the scene to indicate the location of the critical tissue structure within the scene.

[0219] Example 16 is a method as in any of Examples 1-15, wherein the critical tissue structure comprises one or more of a nerve, a ureter, a blood vessel, an artery, a blood flow, or a tumor.

[0220] Example 17 is a method as in any of Examples 1-16, further comprising synchronizing timing of the plurality of pulses of electromagnetic radiation to be emitted during a blanking period of the image sensor, wherein the blanking period corresponds to a time between a readout of a last row of active pixels in the pixel array and a beginning of a next subsequent readout of active pixels in the pixel array.

[0221] Example 18 is a method as in any of Examples 1-17, wherein sensing the reflected electromagnetic radiation comprises sensing with a first pixel array and a second pixel array such that a three-dimensional image can be generated based on the sensed reflected electromagnetic radiation.

[0222] Example 19 is a method as in any of Examples 1-18, wherein actuating the emitter comprises actuating the emitter to emit a sequence of pulses of electromagnetic radiation repeatedly sufficient for generating a video stream comprising a plurality of image frames, wherein each image frame in the video stream comprises data from a plurality of exposure frames, and wherein each of the exposure frames corresponds to a pulse of electromagnetic radiation.

[0223] Example 20 is a method as in any of Examples 1-19, wherein at least a portion of the plurality of pulses of electromagnetic radiation emitted by the emitter is an excitation wavelength for fluorescing a reagent, and wherein at

least a portion of the reflected electromagnetic radiation sensed by the pixel array is a relaxation wavelength of the reagent.

[0224] Example 21 is a system. The system includes an emitter for emitting a plurality of pulses of electromagnetic radiation. The system includes an image sensor comprising a pixel array for sensing reflected electromagnetic radiation to generate a plurality of exposure frames. The system includes one or more processors configurable to execute instructions stored in non-transitory computer readable storage media, the instructions comprising applying edge enhancement to edges within an exposure frame of the plurality of exposure frames. The system is such that at least a portion of the pulses of electromagnetic radiation emitted by the emitter comprises one or more of: electromagnetic radiation having a wavelength from about 795 nm to about 815 nm.

[0225] Example 22 is a system as in Example 21, wherein the instructions further comprise: detecting the edges within the exposure frame; retrieving from memory a known conversion gain and an applied sensor gain for the pixel array; calculating a threshold magnitude of noise acceptable in the exposure frame based on the known conversion gain and the applied sensor gain for the pixel array; and adjusting a magnitude of the applied edge enhancement based on the threshold magnitude of noise acceptable in the exposure frame.

[0226] Example 23 is a system as in any of Examples 21-22, wherein the instructions are such that applying the edge enhancement to the edges within the exposure frame comprises: extracting luminance data from the exposure frame; detecting the edges within the exposure frame; applying a gain factor to the detected edges within the image frame to generate modified edge data; and merging the luminance data and the modified edge data.

[0227] Example 24 is a system as in any of Examples 21-23, wherein the instructions further comprise calculating expected noise for the plurality of exposure frames generated by the pixel array based on one or more of: a known conversion gain for each pixel within the pixel array, a known applied sensor gain for the pixel array, or a voltage range for a digitizer of an image processing system in electronic communication with the image sensor.

[0228] Example 25 is a system as in any of Examples 21-24, wherein at least a portion of the pulses of electromagnetic radiation emitted by the emitter results in a fluorescence exposure frame created by the image sensor, and wherein the instructions further comprise providing the fluorescence exposure frame to a corresponding system that determines a location of a critical tissue structure within a scene based on the fluorescence exposure frame.

[0229] Example 26 is a system as in any of Examples 21-25, wherein the instructions further comprise: receiving the location of the critical tissue structure from the corresponding system; generating an overlay frame comprising the location of the critical tissue structure; and combining the overlay frame with a color image frame depicting the scene to indicate the location of the critical tissue structure within the scene.

[0230] Example 27 is a system as in any of Examples 21-26, wherein the critical tissue structure comprises one or more of a nerve, a ureter, a blood vessel, an artery, a blood flow, or a tumor.

[0231] Example 28 is a system as in any of Examples 21-27, further comprising a filter that filters electromagnetic radiation having a wavelength from about 770 nm to about 790 nm.

[0232] Example 29 is a system as in any of Examples 21-28, further comprising a filter that filters electromagnetic radiation having a wavelength from about 795 nm to about 815 nm.

[0233] Example 30 is a system as in any of Examples 21-29, further comprising a first filter that filters electromagnetic radiation having a wavelength from about 770 nm to about 790 nm and a second filter that filters electromagnetic radiation having a wavelength from about 795 nm to about 815 nm.

[0234] Example 31 is means for performing any of the method steps reciting in Examples 1-20.

[0235] It will be appreciated that various features disclosed herein provide significant advantages and advancements in the art. The following claims are exemplary of some of those features.

[0236] In the foregoing Detailed Description of the Disclosure, various features of the disclosure are grouped together in a single embodiment for the purpose of streamlining the disclosure. This method of disclosure is not to be interpreted as reflecting an intention that the claimed disclosure requires more features than are expressly recited in each claim. Rather, inventive aspects lie in less than all features of a single foregoing disclosed embodiment.

[0237] It is to be understood that any features of the above-described arrangements, examples, and embodiments may be combined in a single embodiment comprising a combination of features taken from any of the disclosed arrangements, examples, and embodiments.

[0238] It is to be understood that the above-described arrangements are only illustrative of the application of the principles of the disclosure. Numerous modifications and alternative arrangements may be devised by those skilled in the art without departing from the spirit and scope of the disclosure and the appended claims are intended to cover such modifications and arrangements.

[0239] Thus, while the disclosure has been shown in the drawings and described above with particularity and detail, it will be apparent to those of ordinary skill in the art that numerous modifications, including, but not limited to, variations in size, materials, shape, form, function and manner of operation, assembly and use may be made without departing from the principles and concepts set forth herein.

[0240] Further, where appropriate, functions described herein can be performed in one or more of: hardware, software, firmware, digital components, or analog components. For example, one or more application specific integrated circuits (ASICs) or field programmable gate arrays (FPGAs) can be programmed to carry out one or more of the systems and procedures described herein. Certain terms are used throughout the following description and claims to refer to particular system components. As one skilled in the art will appreciate, components may be referred to by different names. This document does not intend to distinguish between components that differ in name, but not function.

[0241] The foregoing description has been presented for the purposes of illustration and description. It is not intended to be exhaustive or to limit the disclosure to the precise form disclosed. Many modifications and variations are possible in light of the above teaching. Further, it should be noted that any or all the aforementioned alternate implementations may be used in any combination desired to form additional hybrid implementations of the disclosure.

[0242] Further, although specific implementations of the disclosure have been described and illustrated, the disclosure is not to be limited to the specific forms or arrangements of parts so described and illustrated. The scope of the disclosure is to be defined by the claims appended hereto, any future claims submitted here and in different applications, and their equivalents.

CLAIMS

What is claimed is:

1. A method comprising:

actuating an emitter to emit a plurality of pulses of electromagnetic radiation;

sensing reflected electromagnetic radiation resulting from the plurality of pulses of electromagnetic radiation with a pixel array of an image sensor to generate a plurality of exposure frames; and

applying edge enhancement to edges within an exposure frame of the plurality of exposure frames;

wherein at least a portion of the plurality of pulses of electromagnetic radiation emitted by the emitter comprises electromagnetic radiation having a wavelength from about 795 nm to about 815 nm.

2. The method of claim 1, further comprising:

detecting the edges within the exposure frame;

retrieving from memory a known conversion gain and an applied sensor gain for the pixel array;

calculating a threshold magnitude of noise acceptable in the exposure frame based on the known conversion gain and the applied sensor gain for the pixel array; and

adjusting a magnitude of the applied edge enhancement based on the threshold magnitude of noise acceptable in the exposure frame.

3. The method of claim 1, wherein applying the edge enhancement to the edges within the exposure frame comprises:

extracting luminance data from the exposure frame;

detecting the edges within the exposure frame;

applying a gain factor to the detected edges within the image frame to generate modified edge data; and

merging the luminance data and the modified edge data.

4. The method of claim 1, further comprising calculating expected noise for the plurality of exposure frames generated by the pixel array based on one or more of: a known conversion gain for each pixel within the pixel array, a known applied sensor gain for the pixel array, or a voltage range for a digitizer of an image processing system in electronic communication with the image sensor.

5. The method of claim 1, wherein applying the edge enhancement comprises applying the edge enhancement in response to the exposure frame comprising more than a threshold magnitude of noise.

6. The method of claim 1, wherein applying the edge enhancement comprises applying the edge enhancement on a per-pixel basis in response to a pixel comprising more than a threshold magnitude of noise, and wherein the method further comprises determining a per-pixel threshold magnitude of noise for a plurality of pixels in the pixel array based on expected local noise.

7. The method of claim 1, further comprising detecting the edges within the exposure frame by:

applying a spatial filter to the exposure frame, wherein the spatial filter is a Gaussian filter;

extracting a luminance plane from the exposure frame;

generating a difference plane by subtracting the spatially filtered version of the exposure frame from the luminance plane; and

detecting the edges by identifying local bipolar signals in the difference plane having amplitudes that scale with spatial frequency.

8. The method of claim 1, further comprising detecting the edges within the exposure frame by:

applying a spatial filter to the exposure frame, wherein the spatial filter is a Gaussian filter; and

applying an edge detect operator kernel to the spatially filtered version of the exposure frame.

9. The method of claim 1, further comprising calculating a gain factor for governing a magnitude of the edge enhancement applied to the edges within the exposure frame, wherein calculating the gain factor comprises calculating based on:

voltage swing of an analog-to-digital converter (ADC) in electronic communication with the image sensor;

a known conversion gain for the pixel array;

an absolute overall linear gain applied to the image sensor; and

a strength adjuster setting received from a user.

10. The method of claim 1, further comprising calculating a gain factor for governing a magnitude of the edge enhancement applied to the edges within the exposure frame, wherein calculating the gain factor comprises:

plotting a gain graph by plotting photon transfer curves of noise versus signal for a range of potential gains;

identifying a calibration factor equal to the reciprocal of a gradient within a linear region of the gain graph;

predicting a magnitude of noise expectation based on the calibration factor; and

calculating the gain factor based on the predicted magnitude of noise expectation and a strength adjust setting received from a user.

11. The method of claim 1, wherein sensing the reflected electromagnetic radiation comprises sensing during a readout period of the pixel array, wherein the readout period is a duration of time when active pixels in the pixel array are read.

12. The method of claim 1, wherein actuating the emitter comprises actuating the emitter to emit, during a pulse duration, a plurality of sub-pulses of electromagnetic radiation having a sub-duration shorter than the pulse duration.

13. The method of claim 1, wherein actuating the emitter comprises actuating the emitter to emit two or more wavelengths simultaneously as a single pulse or a single sub-pulse.

14. The method of claim 1, wherein sensing the reflected electromagnetic radiation comprises generating a fluorescence exposure frame in response to emission of the electromagnetic radiation having a wavelength from about 795 nm to about 815 nm, and wherein the method further comprises providing the fluorescence exposure frame to a corresponding system that determines a location of a critical tissue structure within a scene based on the fluorescence exposure frame.

15. The method of claim 14, further comprising:

receiving the location of the critical tissue structure from the corresponding system;

generating an overlay frame comprising the location of the critical tissue structure; and

combining the overlay frame with a color image frame depicting the scene to indicate the location of the critical tissue structure within the scene.

16. The method of claim 15, wherein the critical tissue structure comprises one or more of a nerve, a ureter, a blood vessel, an artery, a blood flow, or a tumor.

17. The method of claim 1, further comprising synchronizing timing of the plurality of pulses of electromagnetic radiation to be emitted during a blanking period of the image sensor, wherein the blanking period corresponds to a time

between a readout of a last row of active pixels in the pixel array and a beginning of a next subsequent readout of active pixels in the pixel array.

18. The method of claim 1, wherein sensing the reflected electromagnetic radiation comprises sensing with a first pixel array and a second pixel array such that a three-dimensional image can be generated based on the sensed reflected electromagnetic radiation.

19. The method of claim 1, wherein actuating the emitter comprises actuating the emitter to emit a sequence of pulses of electromagnetic radiation repeatedly sufficient for generating a video stream comprising a plurality of image frames, wherein each image frame in the video stream comprises data from a plurality of exposure frames, and wherein each of the exposure frames corresponds to a pulse of electromagnetic radiation.

20. The method of claim 1, wherein at least a portion of the plurality of pulses of electromagnetic radiation emitted by the emitter is an excitation wavelength for fluorescing a reagent, and wherein at least a portion of the reflected electromagnetic radiation sensed by the pixel array is a relaxation wavelength of the reagent.

21. A system comprising:

an emitter for emitting a plurality of pulses of electromagnetic radiation;

an image sensor comprising a pixel array for sensing reflected electromagnetic radiation to generate a plurality of exposure frames; and

one or more processors configurable to execute instructions stored in non-transitory computer readable storage media, the instructions comprising applying edge enhancement to edges within an exposure frame of the plurality of exposure frames;

wherein at least a portion of the pulses of electromagnetic radiation emitted by the emitter comprises electromagnetic radiation having a wavelength from about 795 nm to about 815 nm.

22. The system of claim 21, wherein the instructions further comprise:

detecting the edges within the exposure frame;

retrieving from memory a known conversion gain and an applied sensor gain for the pixel array;

calculating a threshold magnitude of noise acceptable in the exposure frame based on the known conversion gain and the applied sensor gain for the pixel array; and

adjusting a magnitude of the applied edge enhancement based on the threshold magnitude of noise acceptable in the exposure frame.

23. The system of claim 21, wherein the instructions are such that applying the edge enhancement to the edges within the exposure frame comprises:

extracting luminance data from the exposure frame;

detecting the edges within the exposure frame;

applying a gain factor to the detected edges within the image frame to generate modified edge data; and

merging the luminance data and the modified edge data.

24. The system of claim 21, wherein the instructions further comprise calculating expected noise for the plurality of exposure frames generated by the pixel array based on one or more of: a known conversion gain for each pixel within the pixel array, a known applied sensor gain for the pixel array, or a voltage range for a digitizer of an image processing system in electronic communication with the image sensor.

25. The system of claim 21, wherein at least a portion of the pulses of electromagnetic radiation emitted by the emitter results in a fluorescence exposure frame created by the image sensor, and wherein the instructions further comprise providing the fluorescence exposure frame to a corresponding system that determines a location of a critical tissue structure within a scene based on the fluorescence exposure frame.

26. The system of claim 25, wherein the instructions further comprise:

receiving the location of the critical tissue structure from the corresponding system;

generating an overlay frame comprising the location of the critical tissue structure; and

combining the overlay frame with a color image frame depicting the scene to indicate the location of the critical tissue structure within the scene.

27. The system of claim 26, wherein the critical tissue structure comprises one or more of a nerve, a ureter, a blood vessel, an artery, a blood flow, or a tumor.

28. The system of claim 21, further comprising a filter that filters electromagnetic radiation having a wavelength from about 795 nm to about 815 nm.

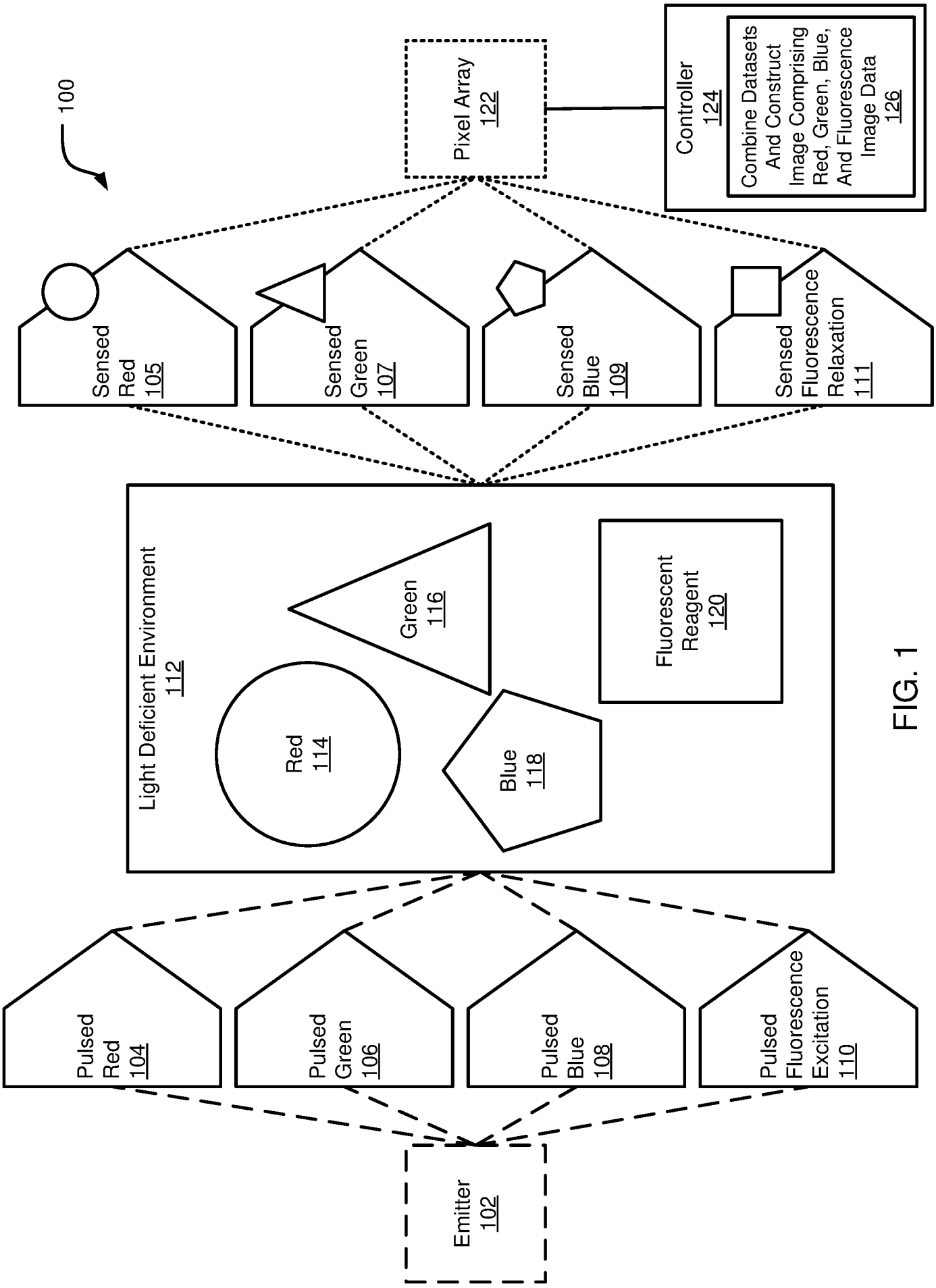
100
Pixel Array
122
Controller
124
Combine Datasets And Construct Image Comprising Red, Green, Blue, And Fluorescence Image Data
126
Sensed Red
105
Sensed Green
107
Sensed Blue
109
Sensed Fluorescence Relaxation
111
Light Deficient Environment
112
Green
116
Red
114
Blue
118
Fluorescent Reagent
120
Pulsed Red
104
Pulsed Green
106
Pulsed Blue
108
Pulsed Fluorescence Excitation
110
Emitter
102

FIG. 1

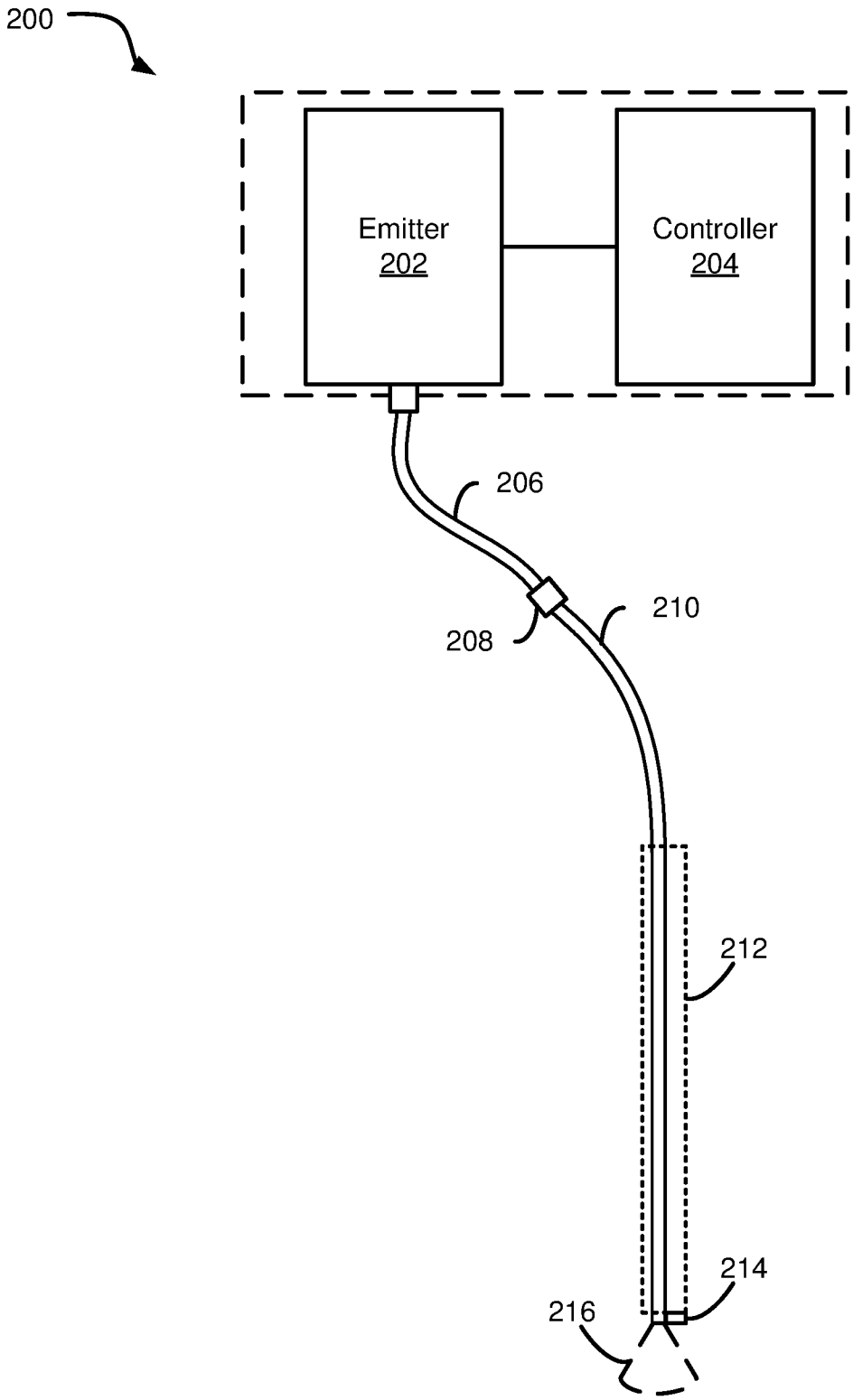

FIG. 2

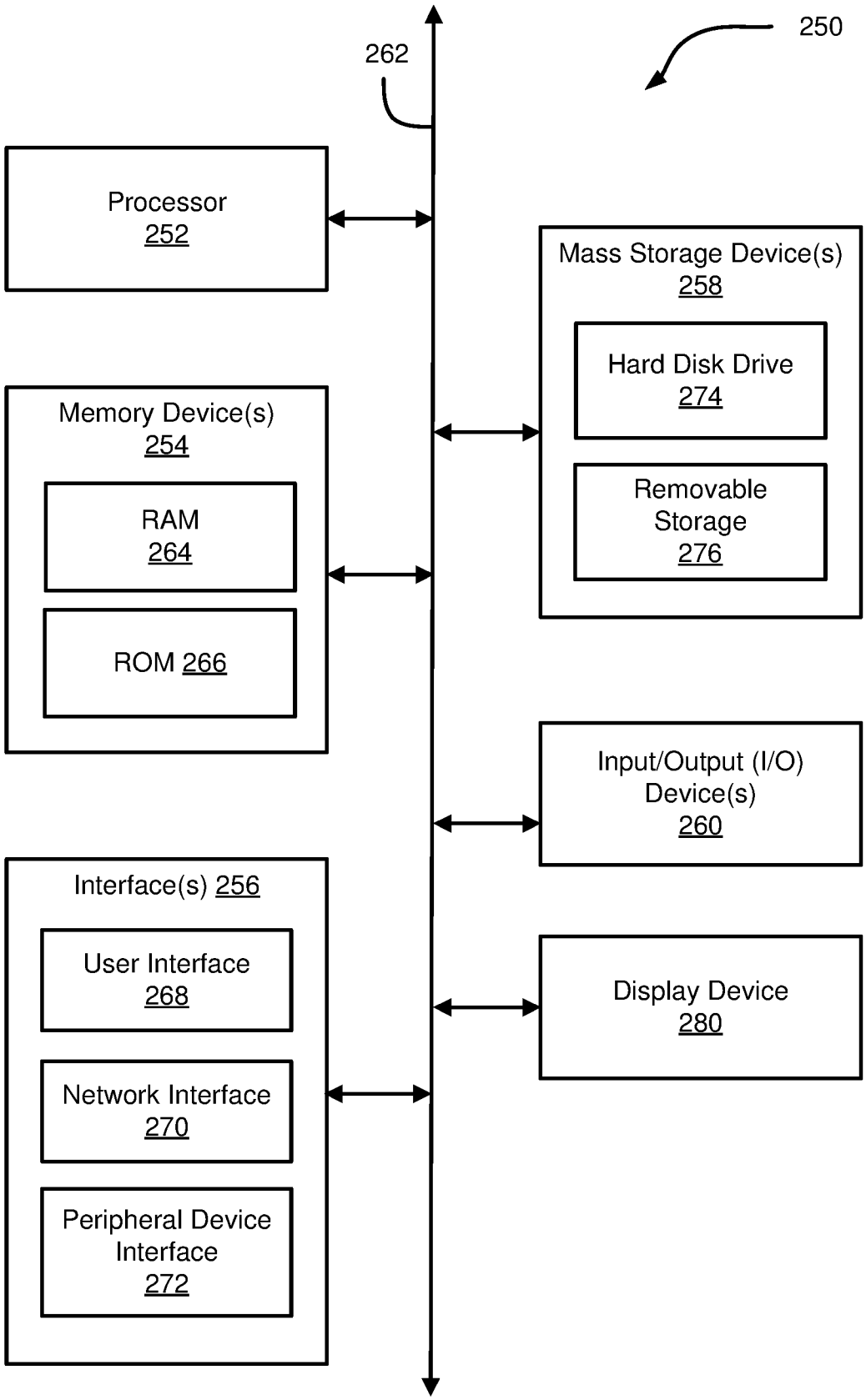
250
262
Processor
252
Mass Storage Device(s)
258
Hard Disk Drive
274
Removable
Storage
276
Memory Device(s)
254
RAM
264
ROM 266
Input/Output (I/O)
Device(s)
260
Interface(s) 256
User Interface
268
Display Device
280
Network Interface
270
Peripheral Device
Interface
272

FIG. 2A

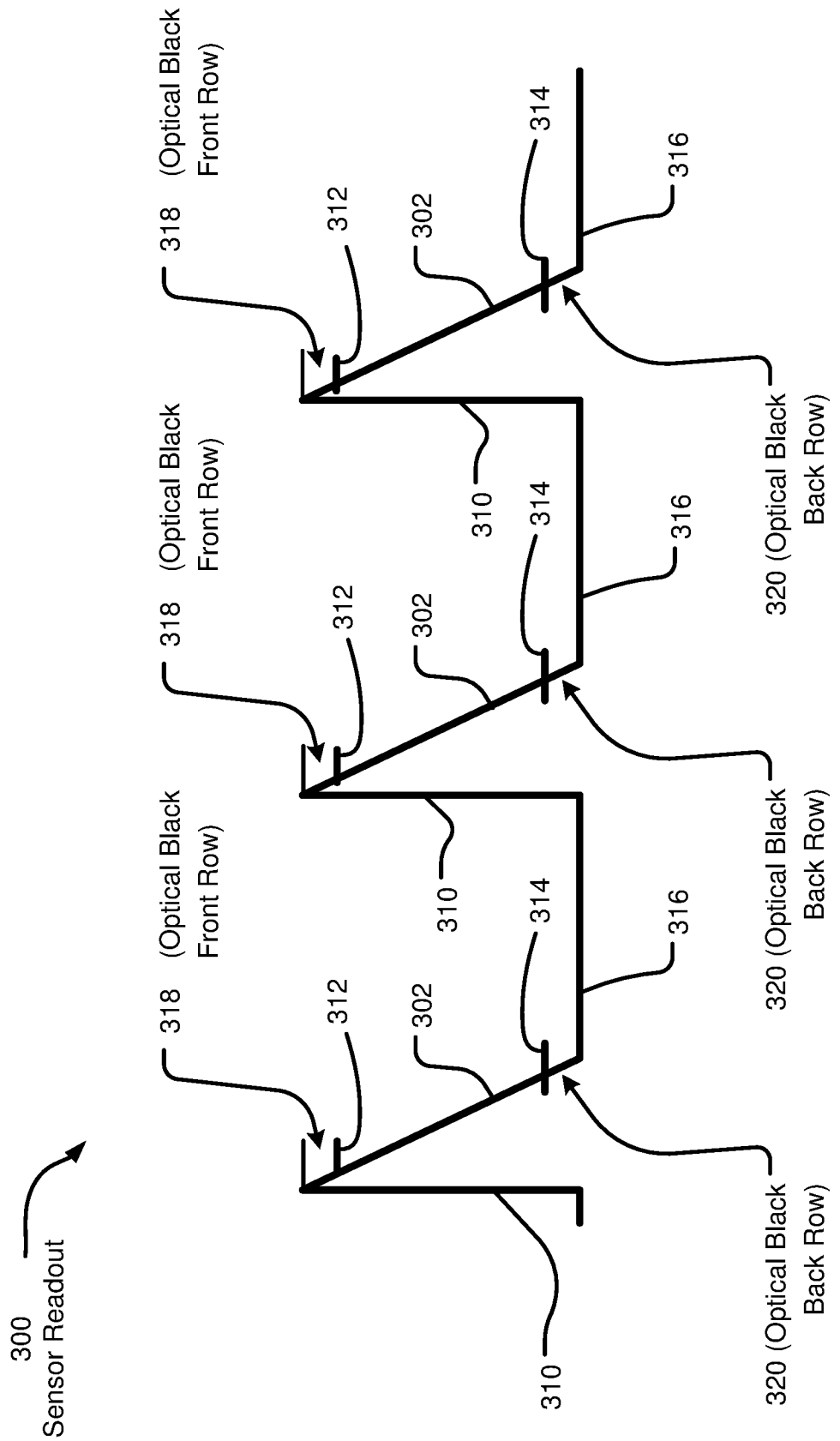
300
Sensor Readout
318 (Optical Black Front Row)
312
302
314
316
310
320 (Optical Black Back Row)

FIG. 3A

FIG. 3B

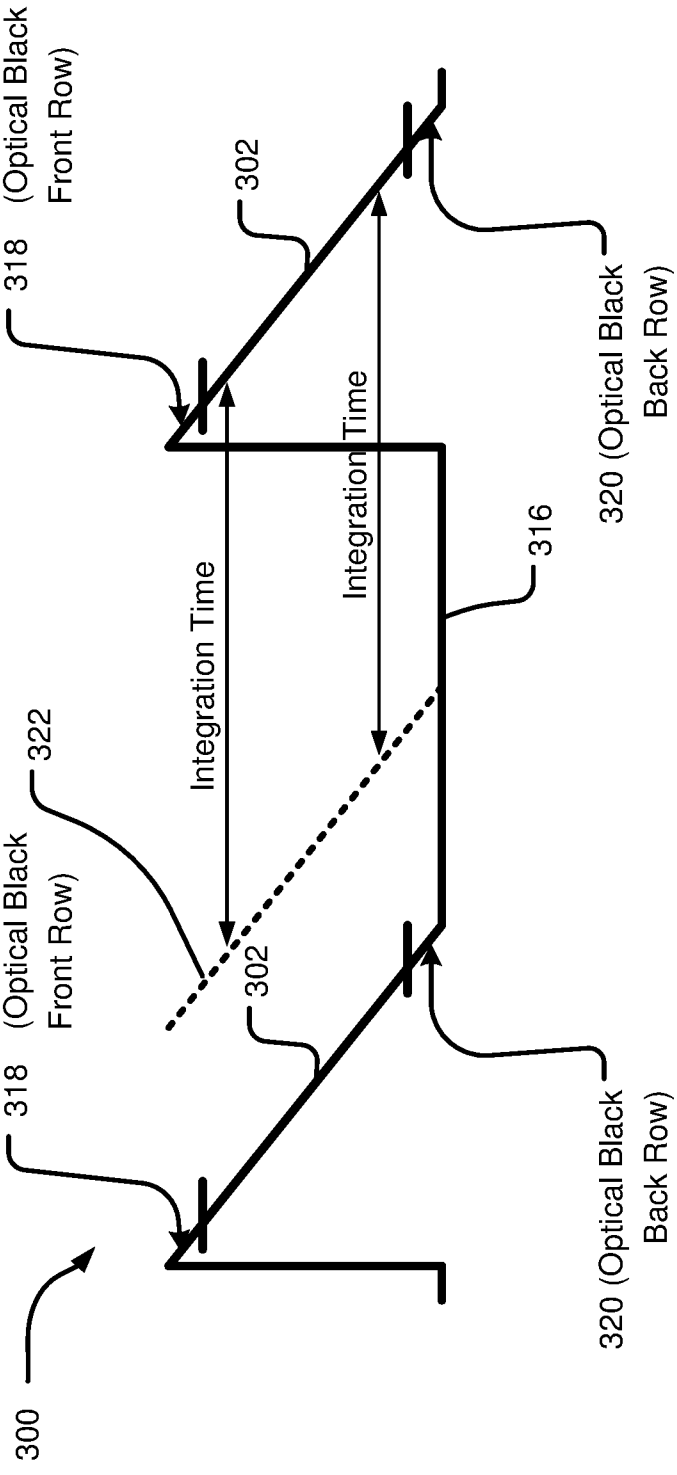
300
318 (Optical Black Front Row)
302
320 (Optical Black Back Row)
Integration Time
316
322
Integration Time
318 (Optical Black Front Row)
302
320 (Optical Black Back Row)

FIG. 3C

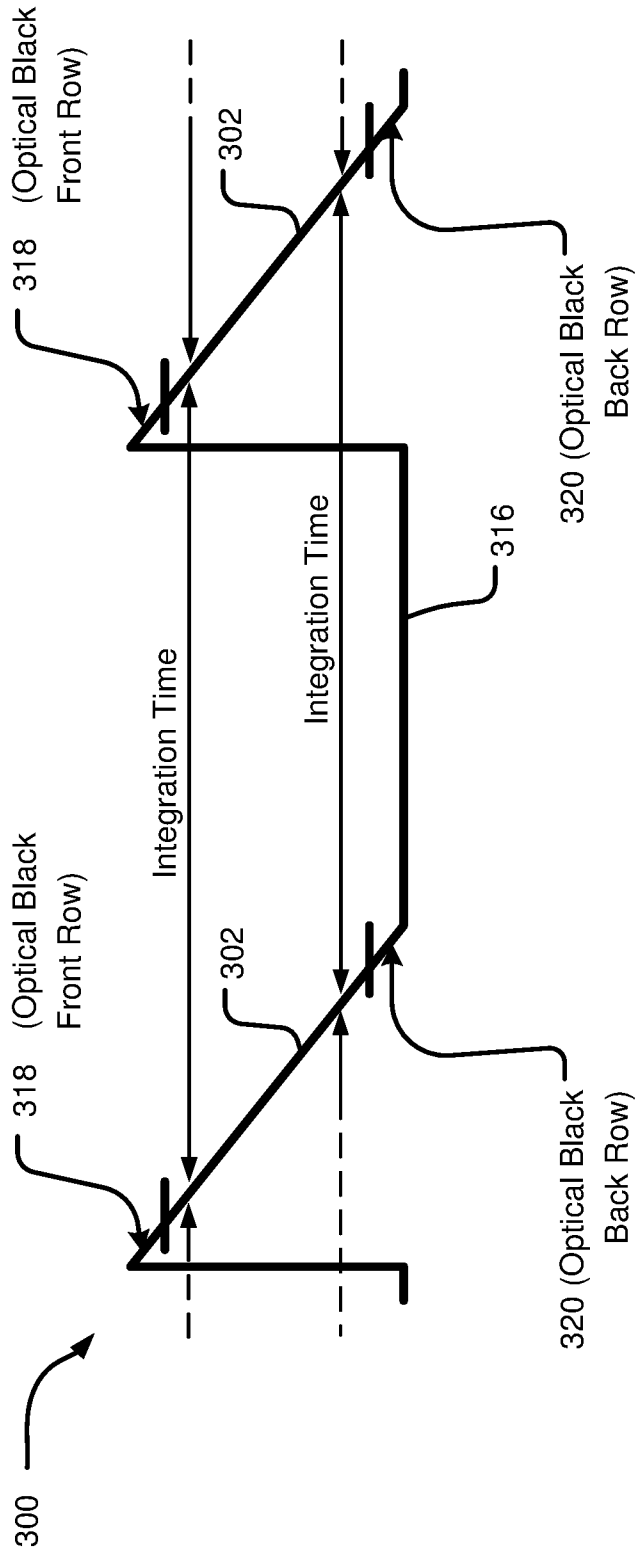
300
318 (Optical Black Front Row)
302
320 (Optical Black Back Row)
Integration Time
316
Integration Time
318 (Optical Black Front Row)
302
320 (Optical Black Back Row)

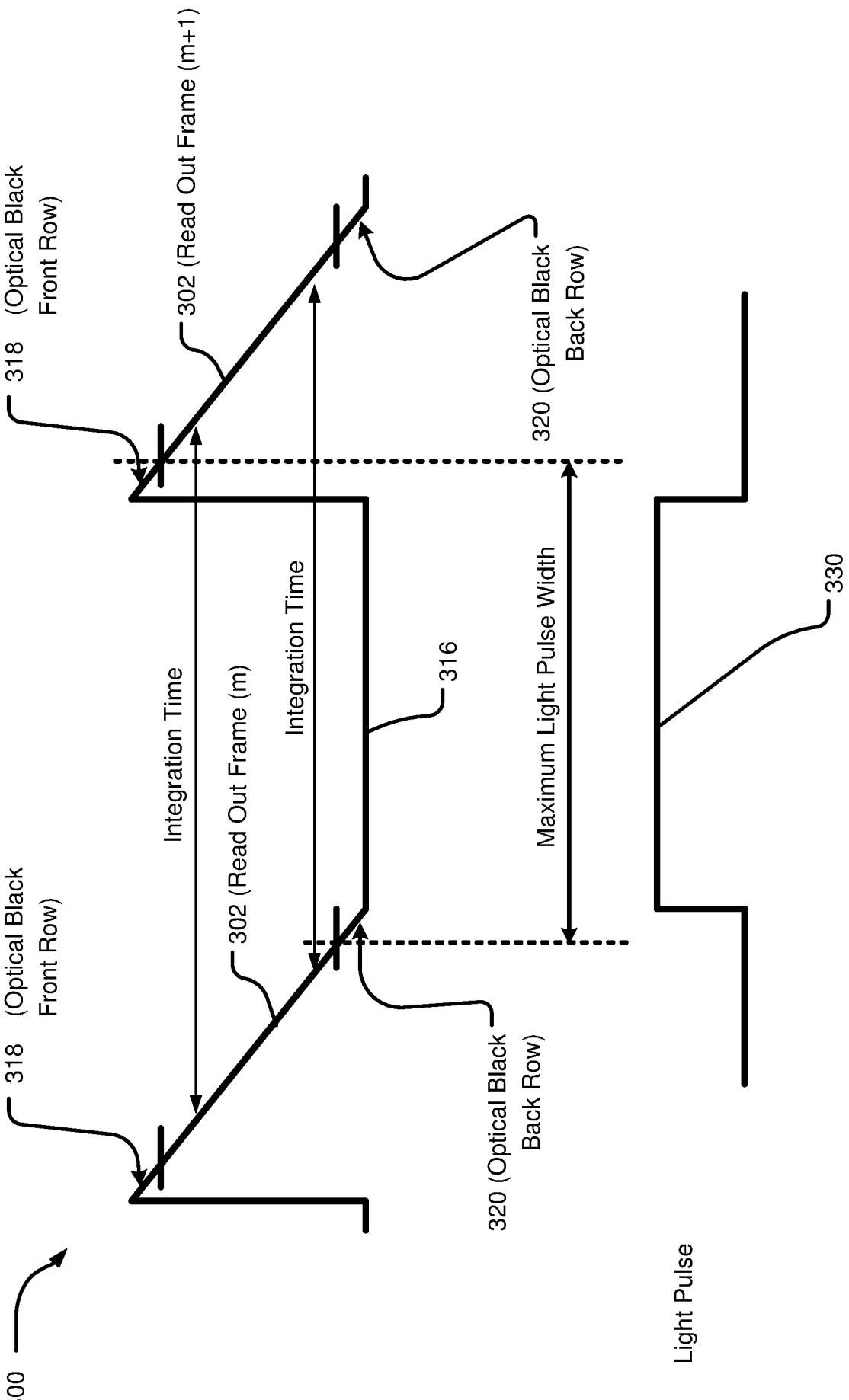
300
318 (Optical Black Front Row)
302 (Read Out Frame (m+1)
320 (Optical Black Back Row)
Integration Time
302 (Read Out Frame (m)
Integration Time
316
Maximum Light Pulse Width
318 (Optical Black Front Row)
320 (Optical Black Back Row)
330
Light Pulse

FIG. 3D

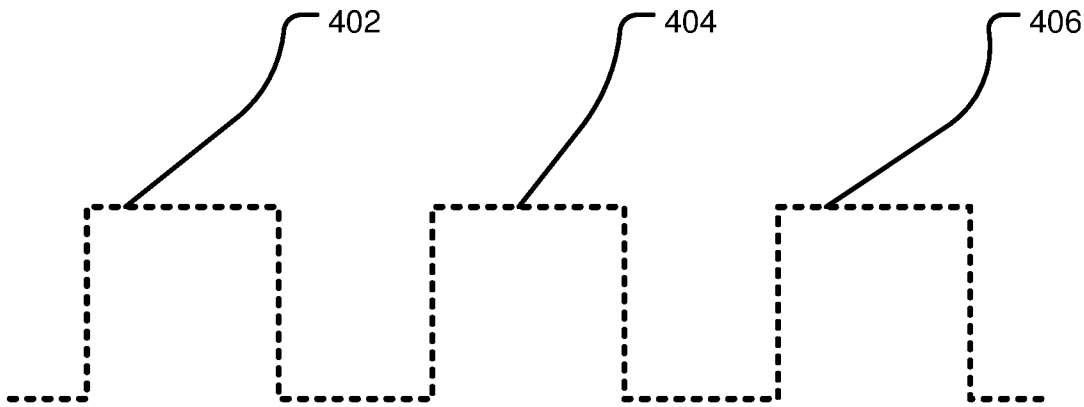

FIG. 4A

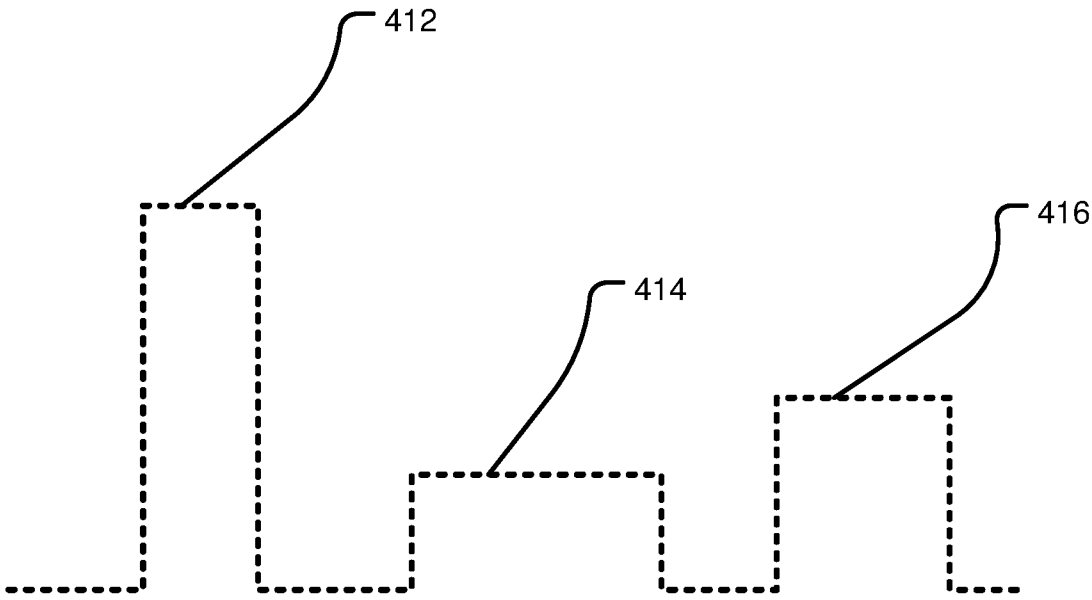

FIG. 4B

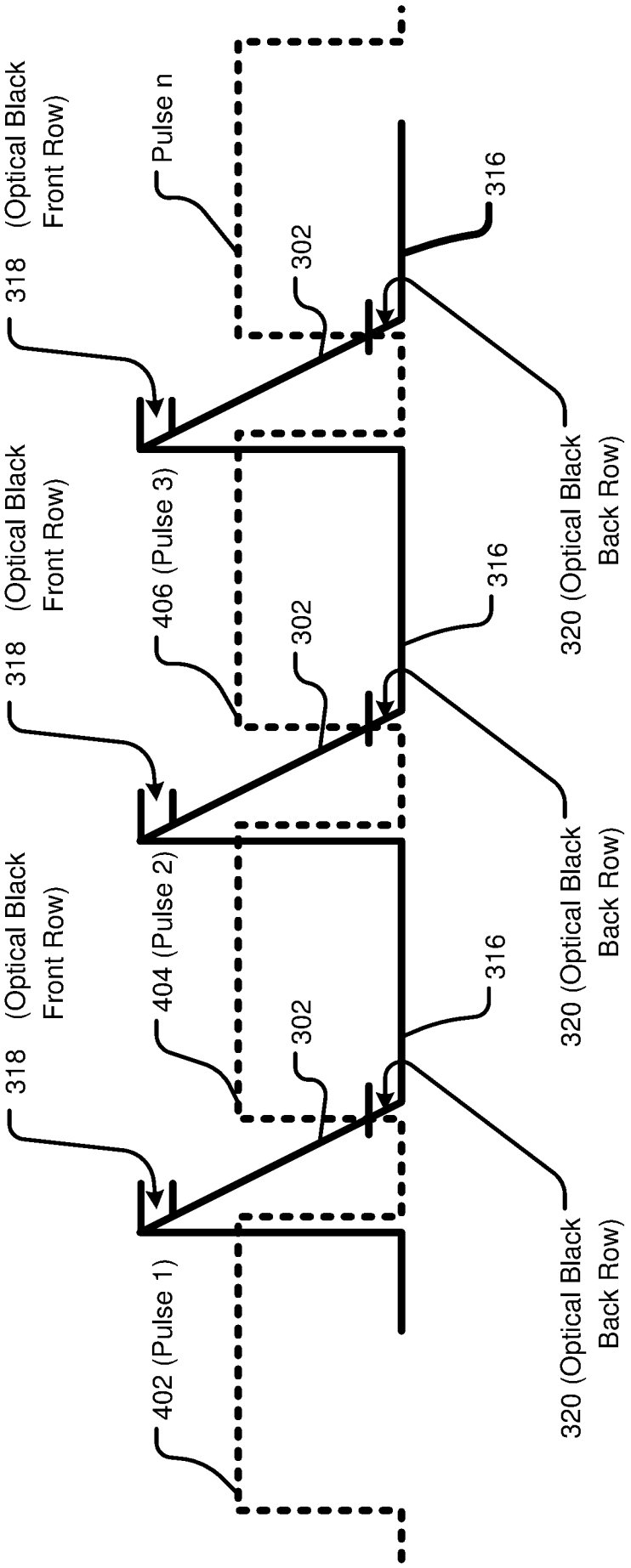
318 (Optical Black Front Row)
Pulse n
316
302
320 (Optical Black Back Row)
318 (Optical Black Front Row)
406 (Pulse 3)
316
302
320 (Optical Black Back Row)
318 (Optical Black Front Row)
404 (Pulse 2)
316
302
320 (Optical Black Back Row)
402 (Pulse 1)

FIG. 5

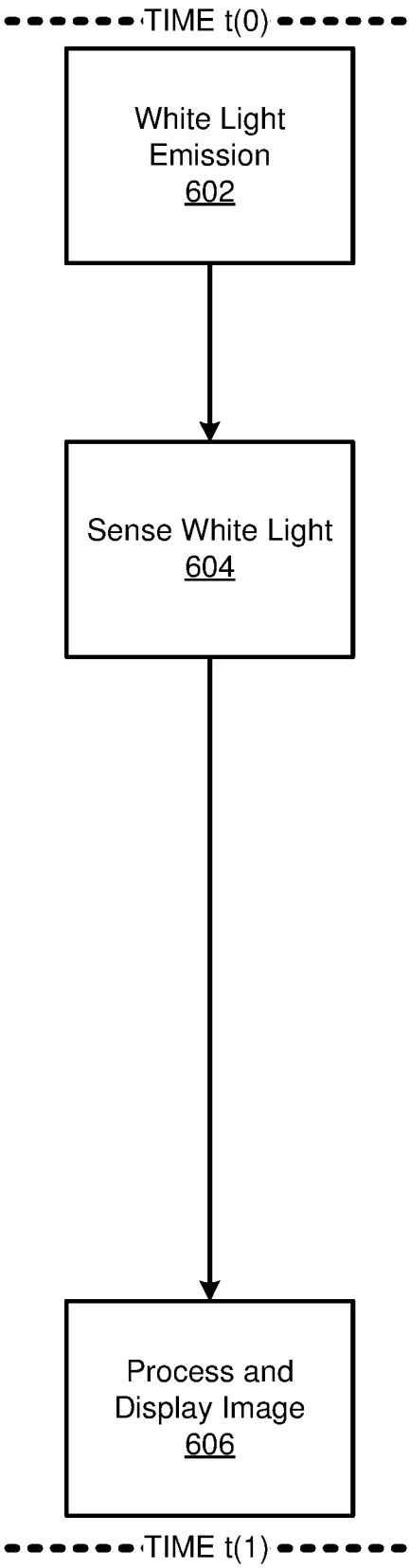

FIG. 6A
(Prior Art)

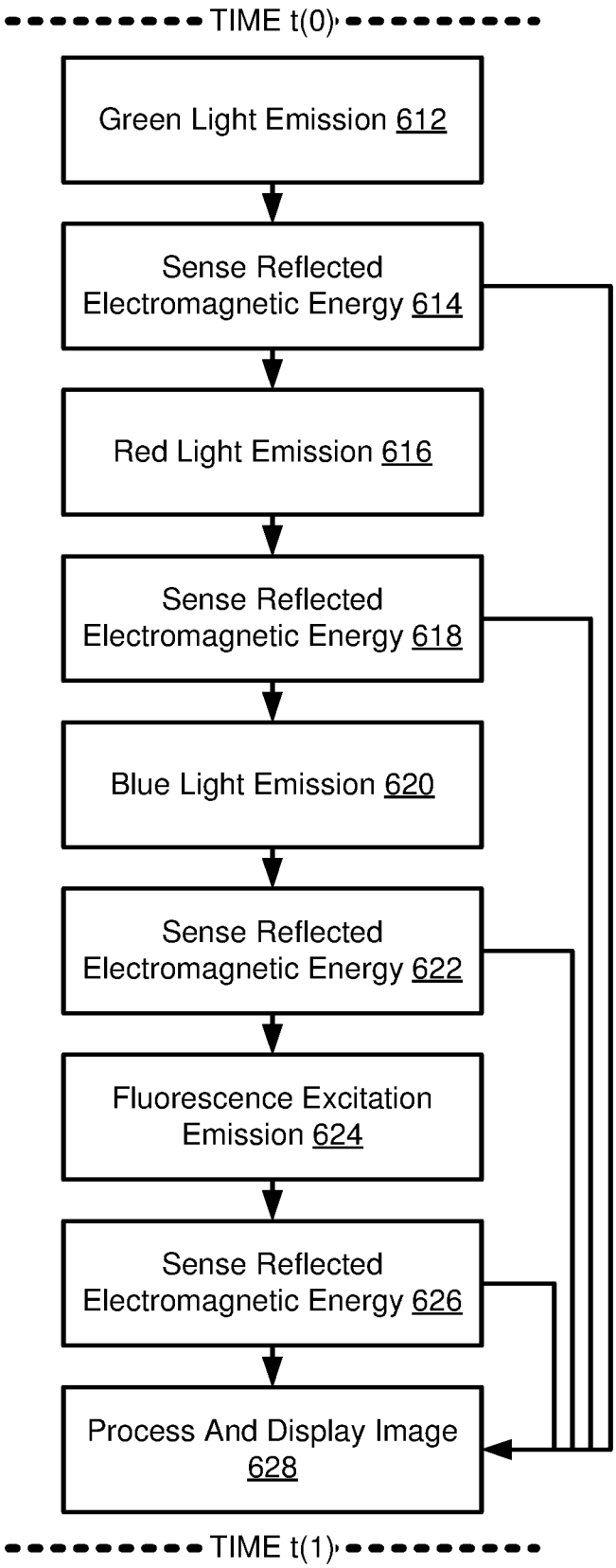

FIG. 6B

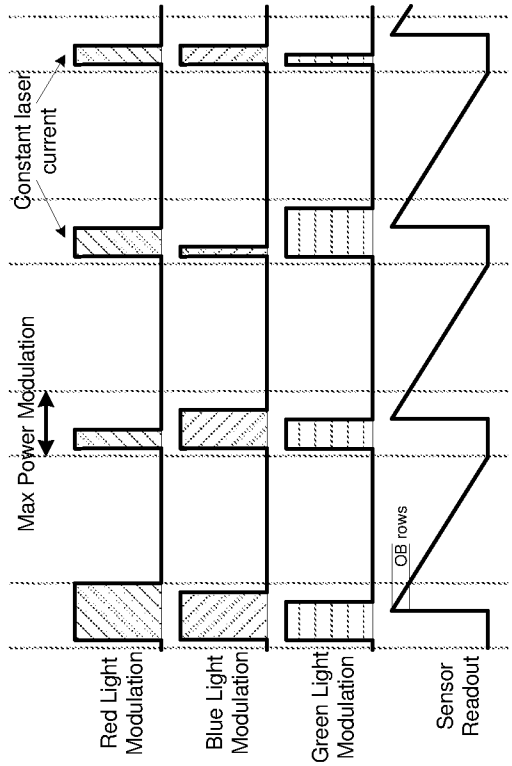

FIG. 7A

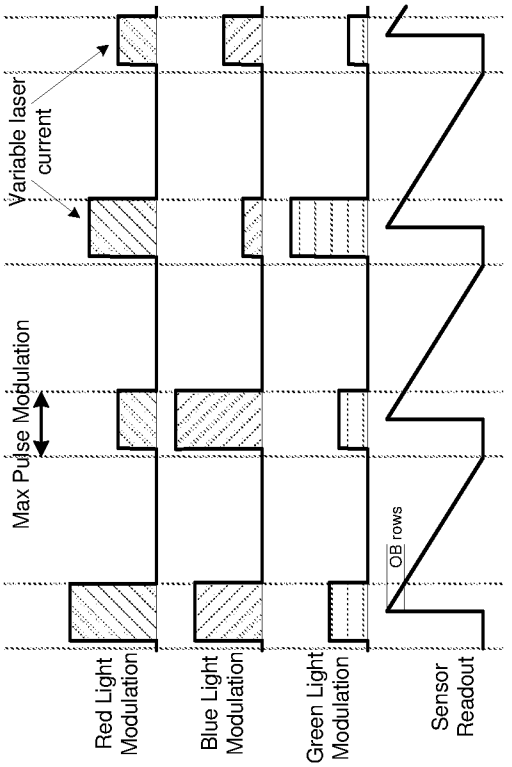

FIG. 7B

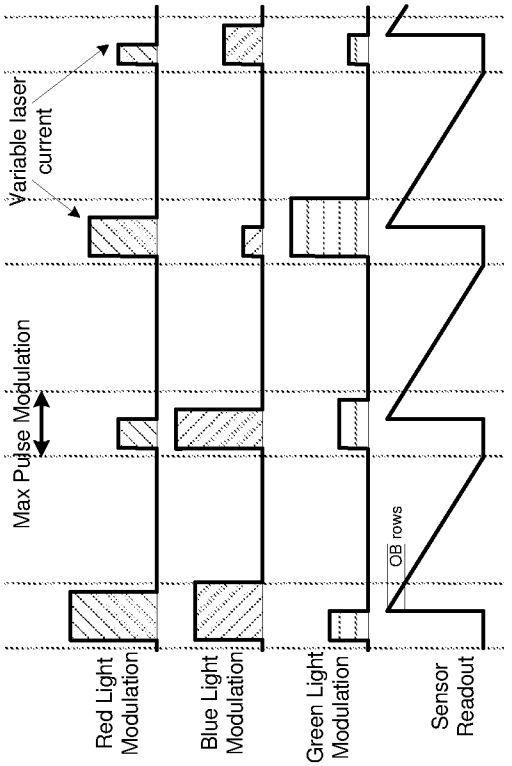

FIG. 7C

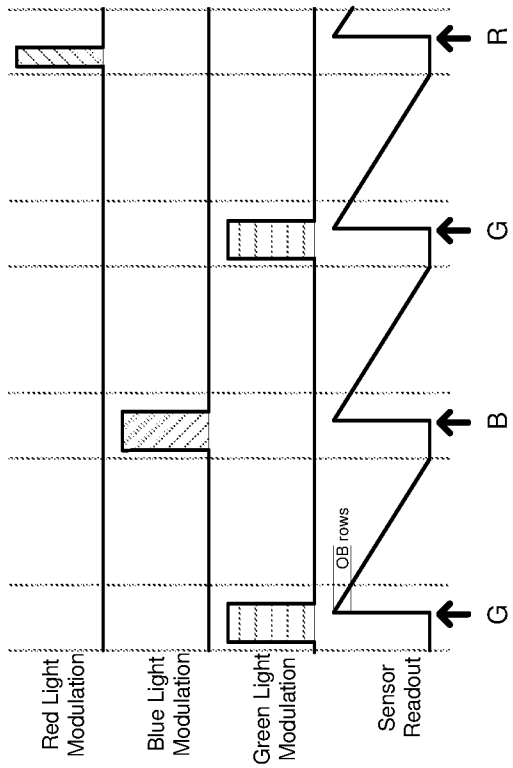

FIG. 7D

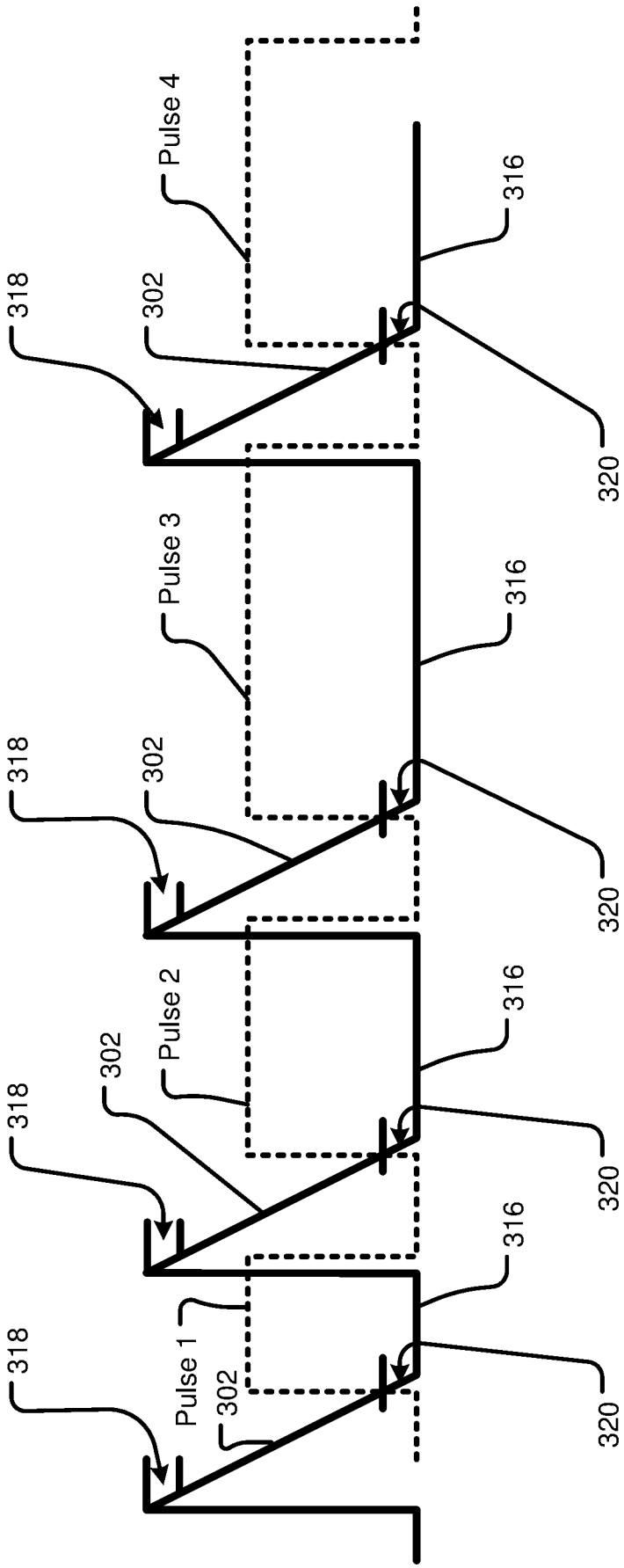
Pulse 4
316
318
302
320
Pulse 3
316
318
302
320
Pulse 2
316
302
318
320
316
Pulse 1
318
302
320

FIG. 7E

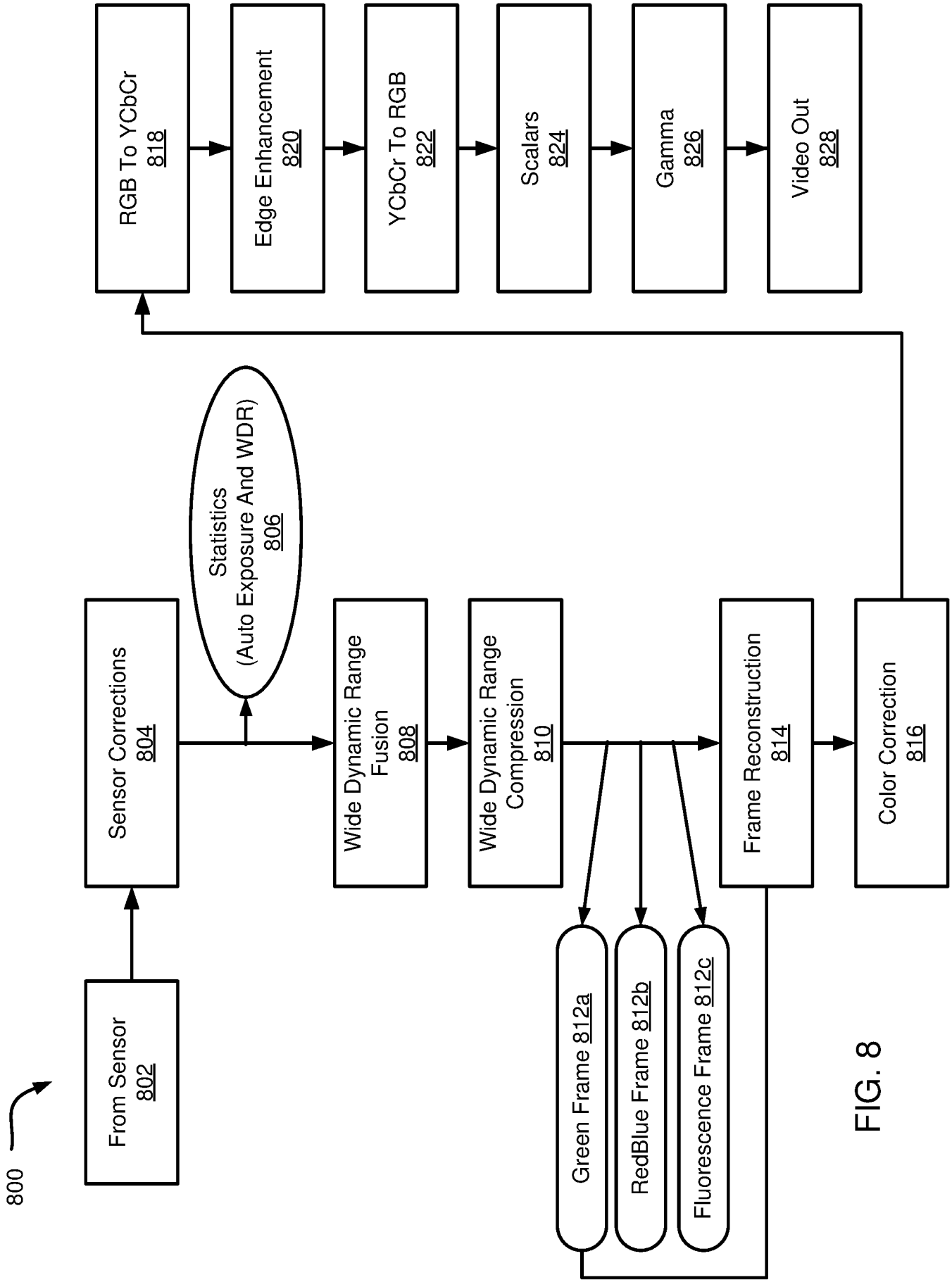
800
From Sensor 802
Sensor Corrections 804
Statistics (Auto Exposure And WDR) 806
Wide Dynamic Range Fusion 808
Wide Dynamic Range Compression 810
Green Frame 812a
RedBlue Frame 812b
Fluorescence Frame 812c
Frame Reconstruction 814
Color Correction 816
RGB To YCbCr 818
Edge Enhancement 820
YCbCr To RGB 822
Scalars 824
Gamma 826
Video Out 828

FIG. 8

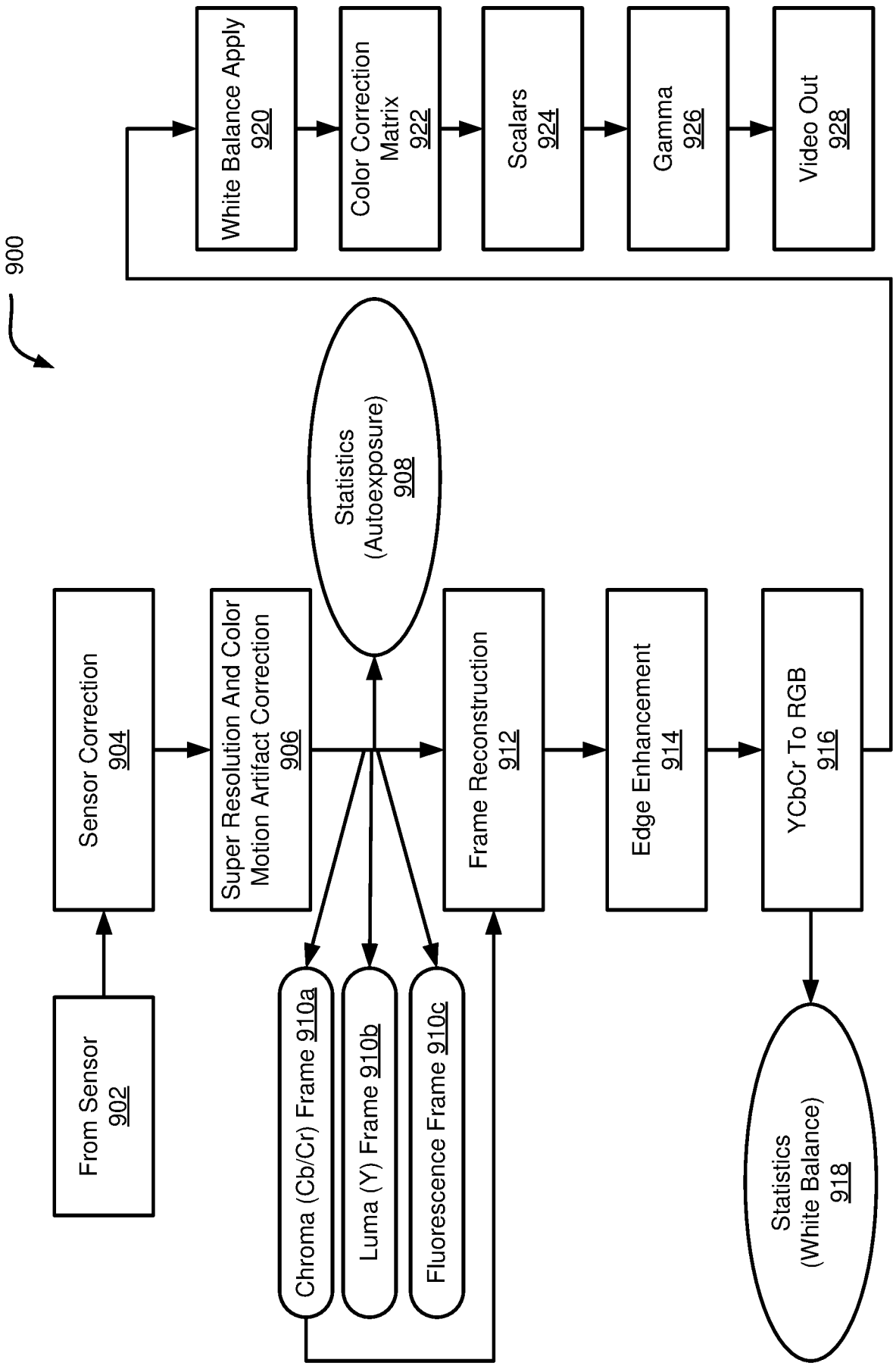
900
From Sensor 902
Sensor Correction 904
Super Resolution And Color Motion Artifact Correction 906
Statistics (Autoexposure) 908
Chroma (Cb/Cr) Frame 910a
Luma (Y) Frame 910b
Fluorescence Frame 910c
Frame Reconstruction 912
Edge Enhancement 914
YCbCr To RGB 916
Statistics (White Balance) 918
White Balance Apply 920
Color Correction Matrix 922
Scalars 924
Gamma 926
Video Out 928

FIG. 9

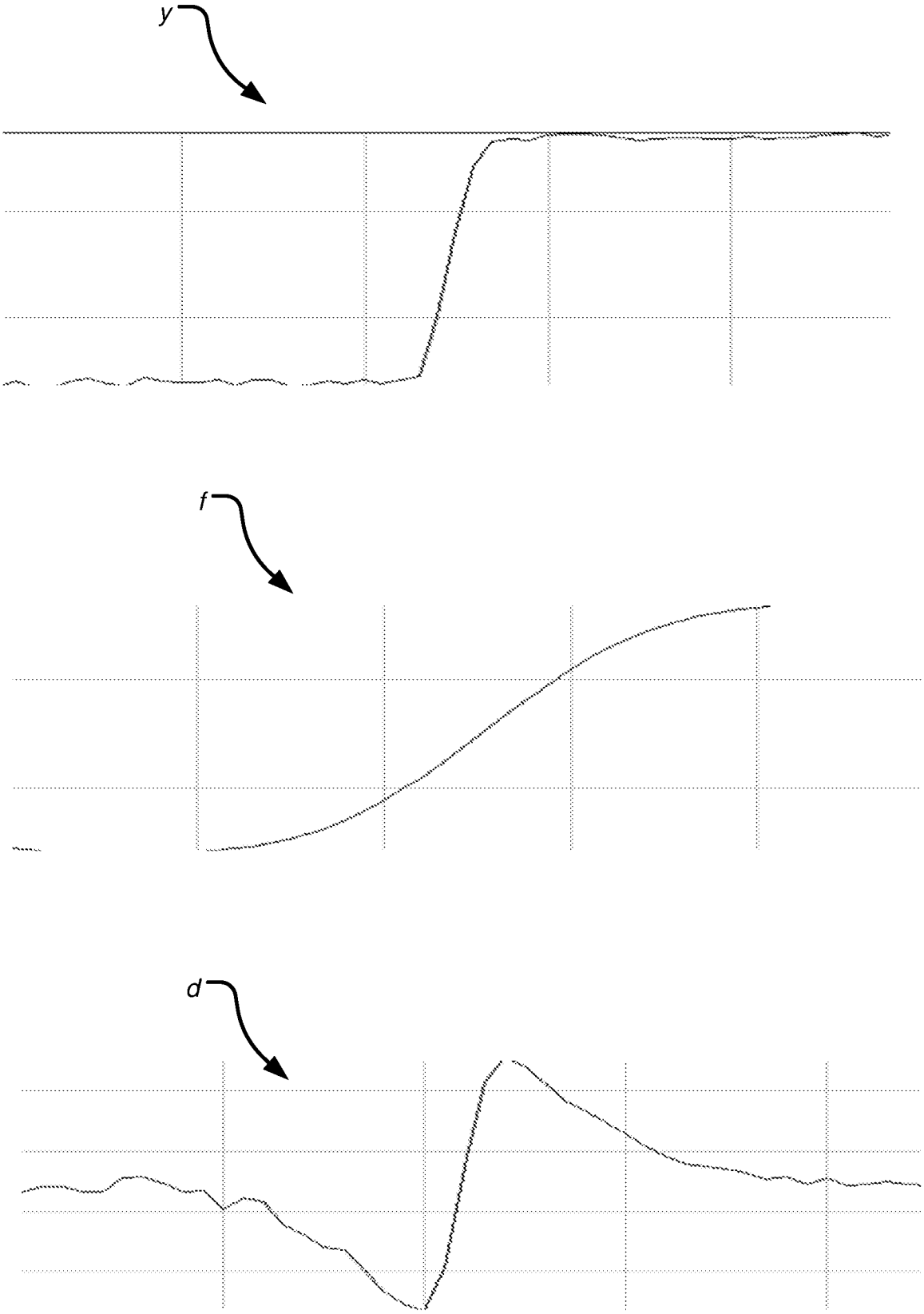

FIG. 10

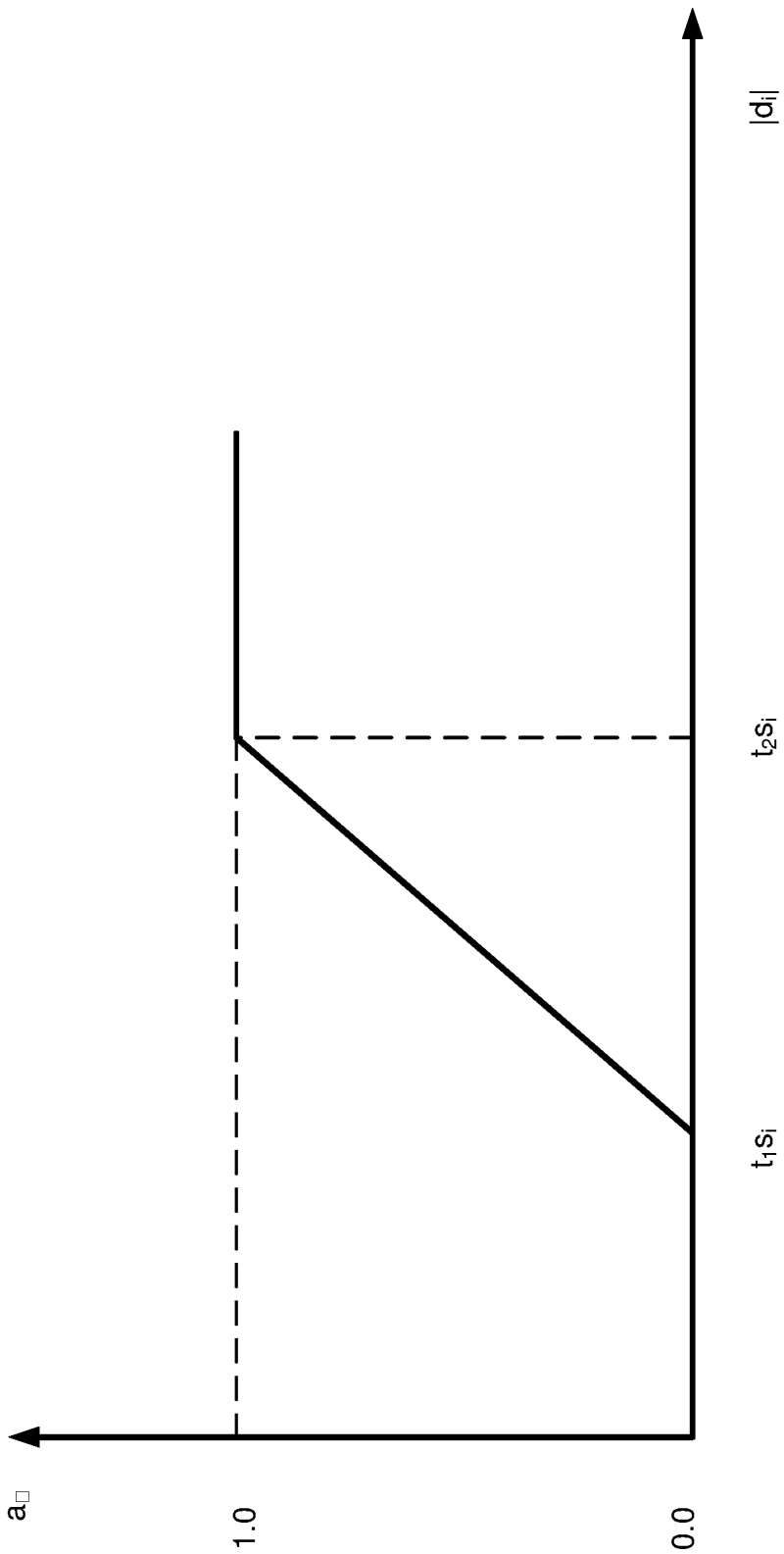

FIG. 11

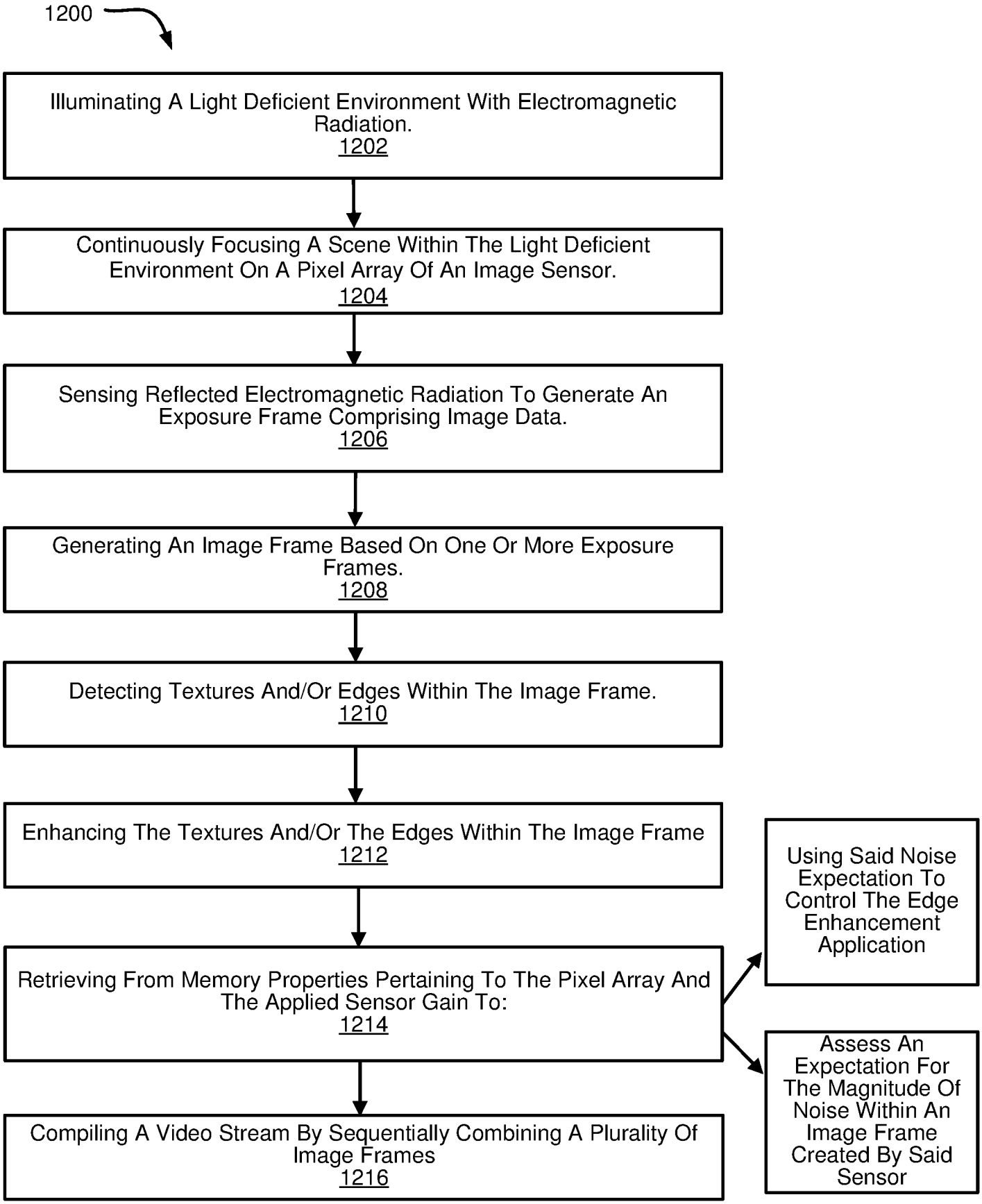
1200
Illuminating A Light Deficient Environment With Electromagnetic Radiation.
1202
Continuously Focusing A Scene Within The Light Deficient Environment On A Pixel Array Of An Image Sensor.
1204
Sensing Reflected Electromagnetic Radiation To Generate An Exposure Frame Comprising Image Data.
1206
Generating An Image Frame Based On One Or More Exposure Frames.
1208
Detecting Textures And/Or Edges Within The Image Frame.
1210
Enhancing The Textures And/Or The Edges Within The Image Frame
1212
Retrieving From Memory Properties Pertaining To The Pixel Array And The Applied Sensor Gain To:
1214
Compiling A Video Stream By Sequentially Combining A Plurality Of Image Frames
1216
Using Said Noise Expectation To Control The Edge Enhancement Application
Assess An Expectation For The Magnitude Of Noise Within An Image Frame Created By Said Sensor

FIG. 12

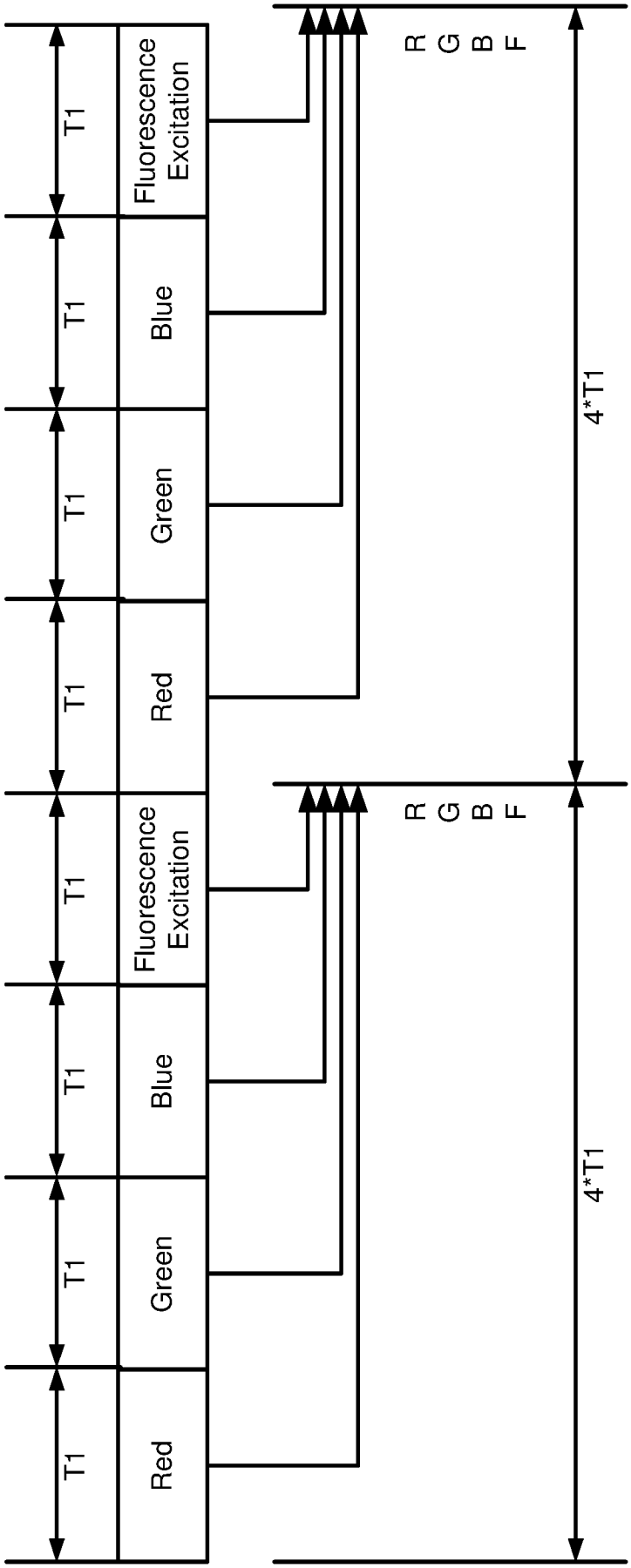
T1
Fluorescence Excitation
T1
Blue
T1
Green
T1
Red
T1
Fluorescence Excitation
T1
Blue
T1
Green
T1
Red
R
G
B
F
4*T1
R
G
B
F
4*T1

FIG. 13

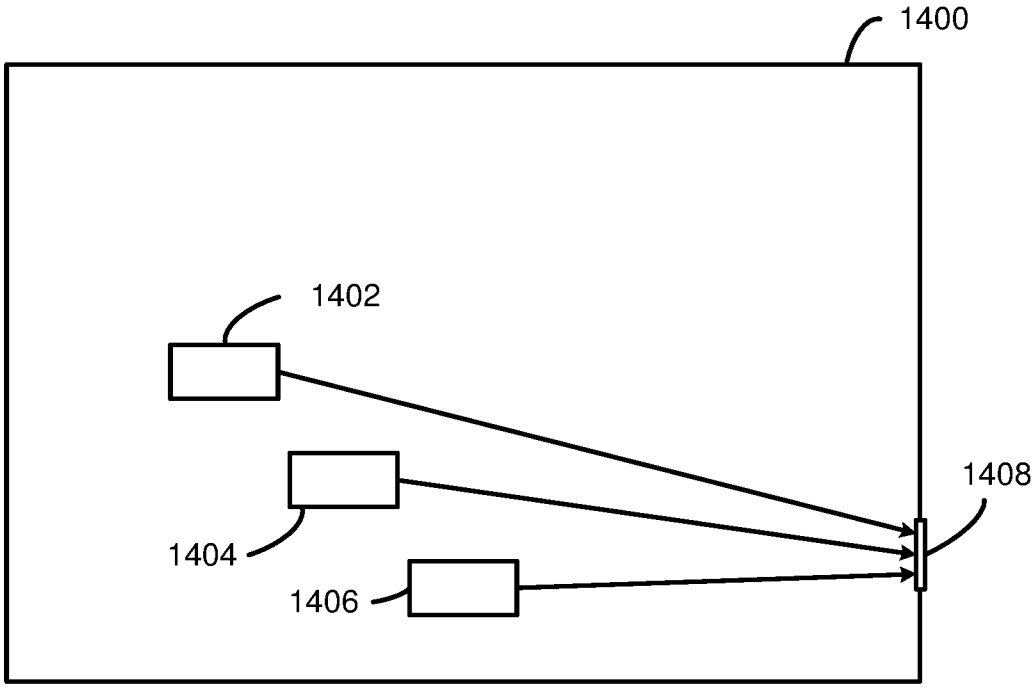

FIG. 14A

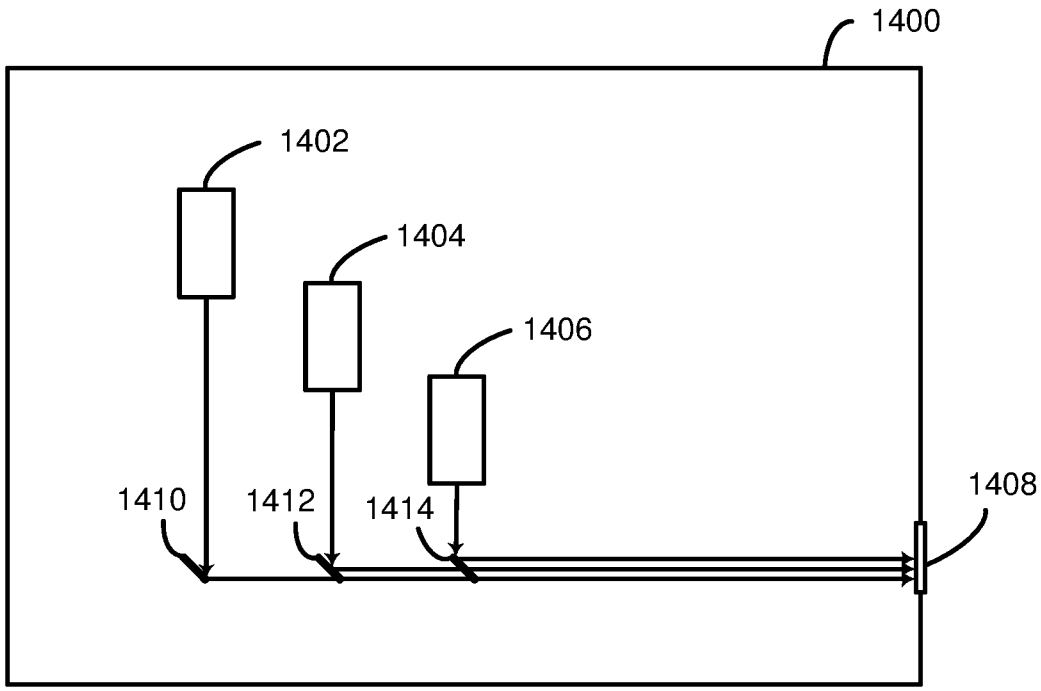

FIG. 14B

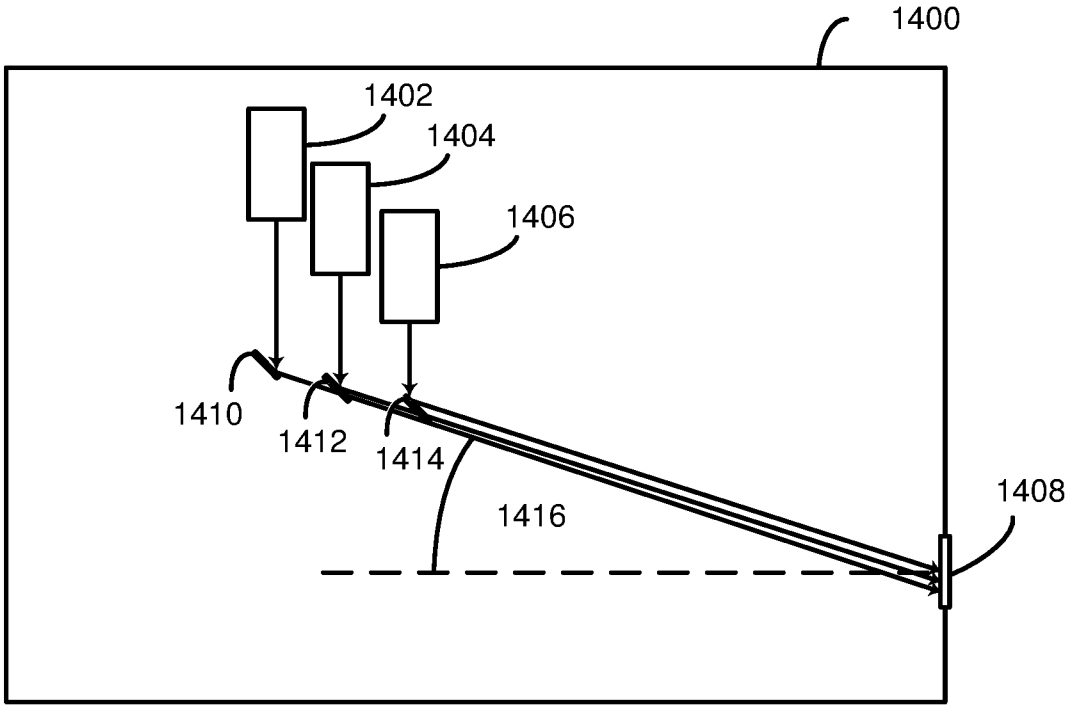

FIG. 14C

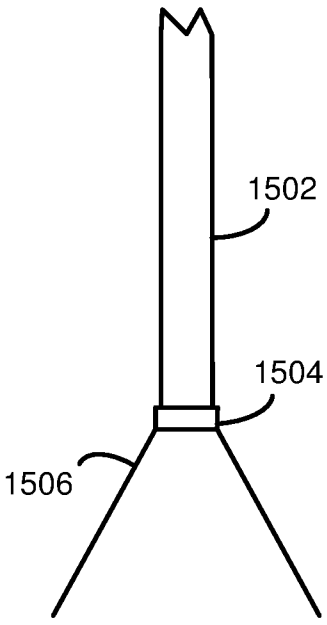

FIG. 15

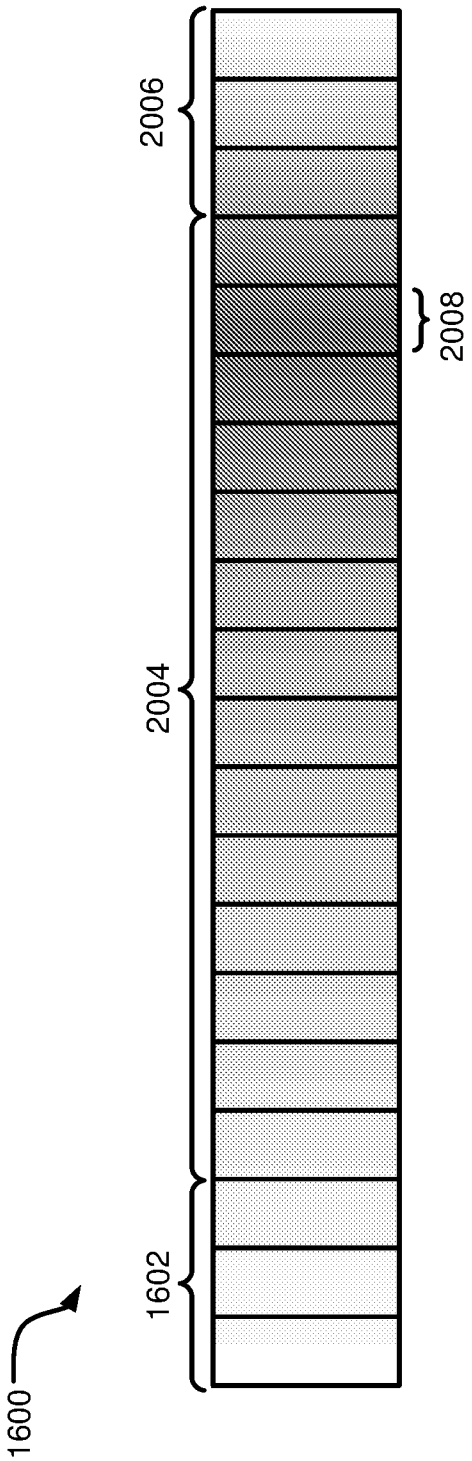
1600
1602
2004
2006
2008

FIG. 16

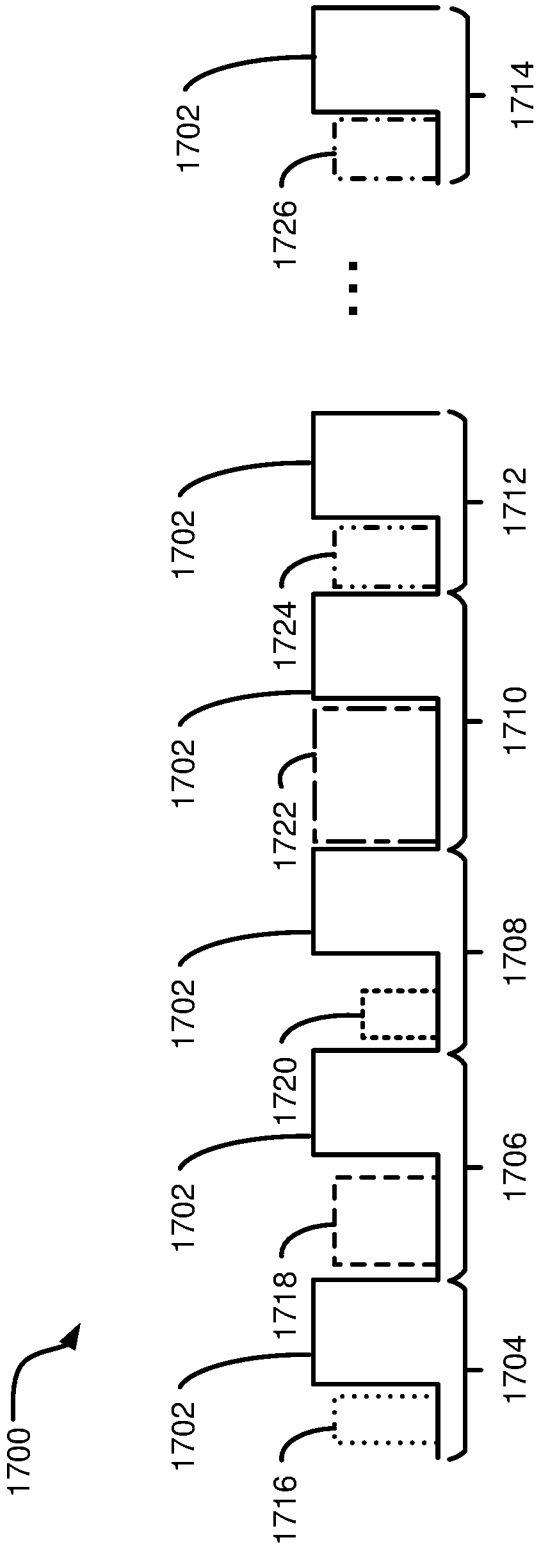
1700
1702
1704
1706
1708
1710
1712
1714
1716
1718
1720
1722
1724
1726

FIG. 17

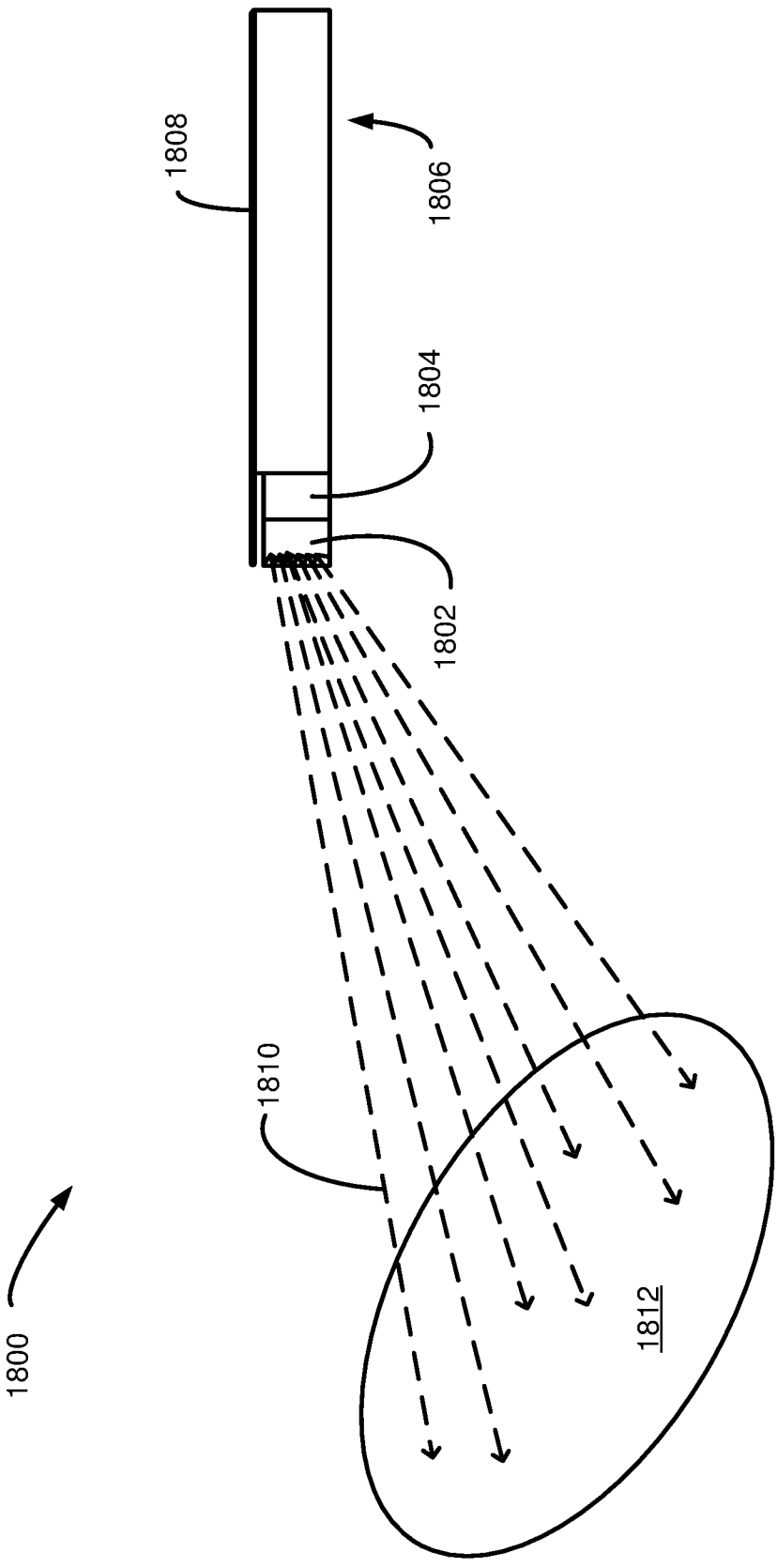

FIG. 18

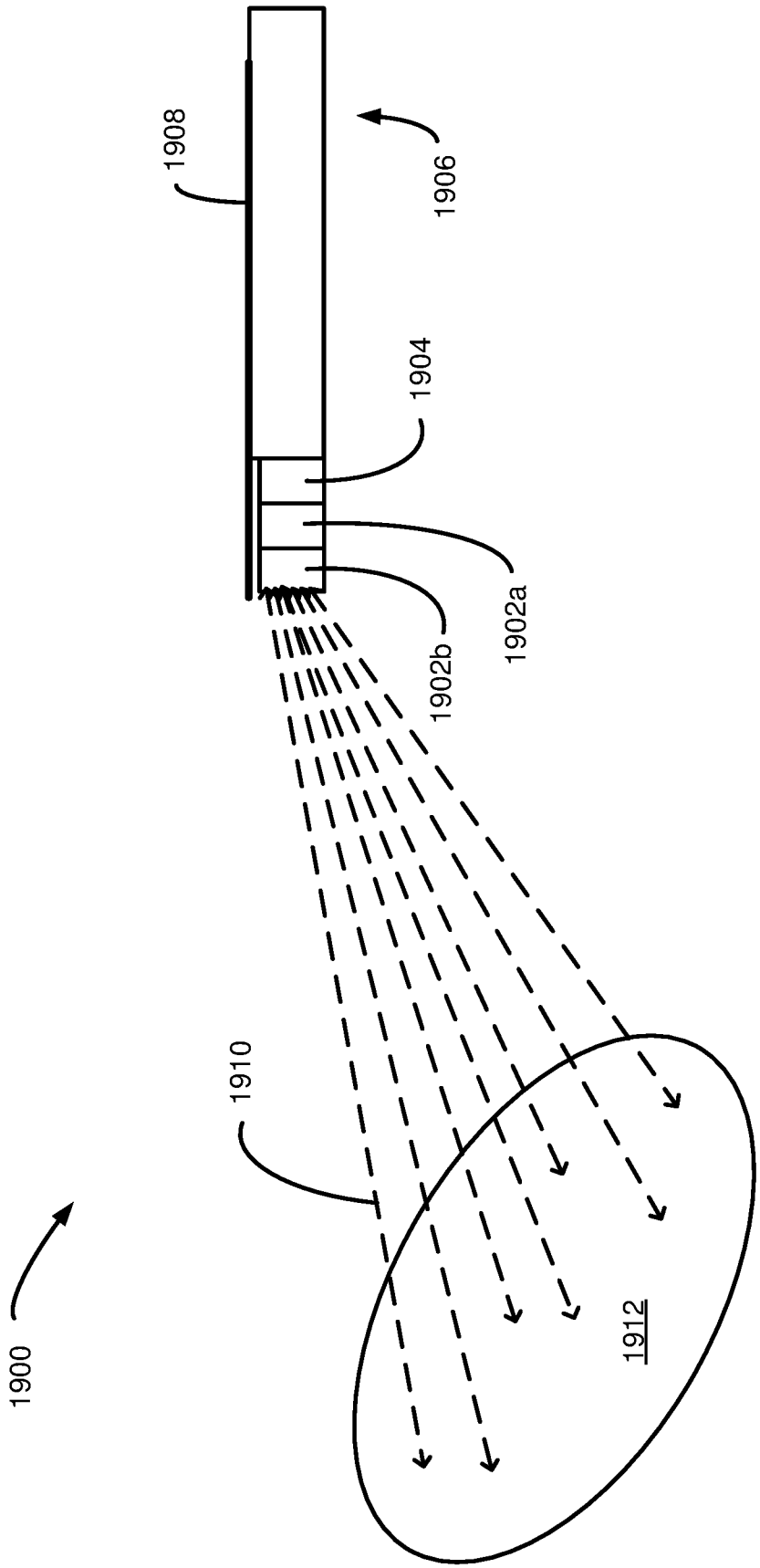

FIG. 19

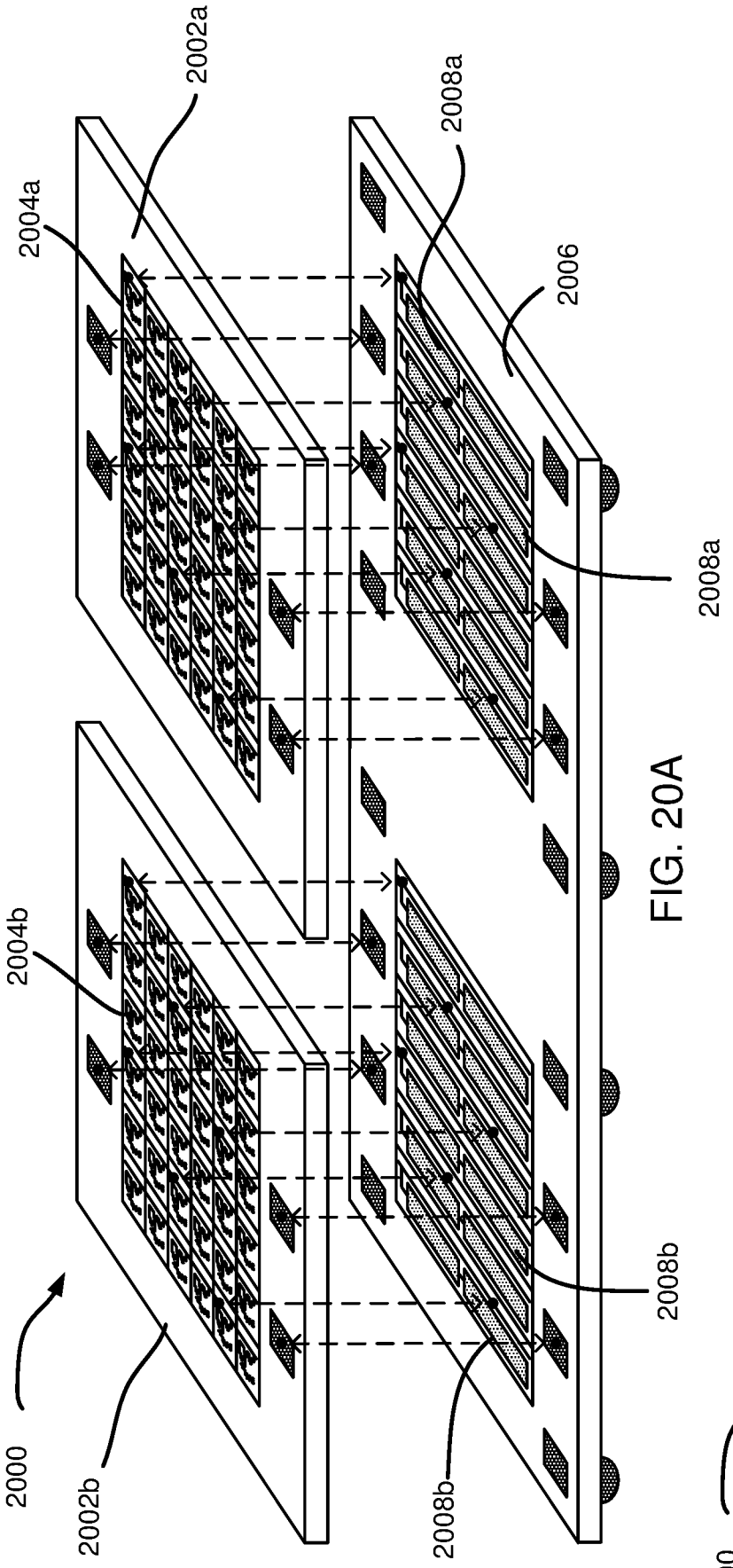

FIG. 20A

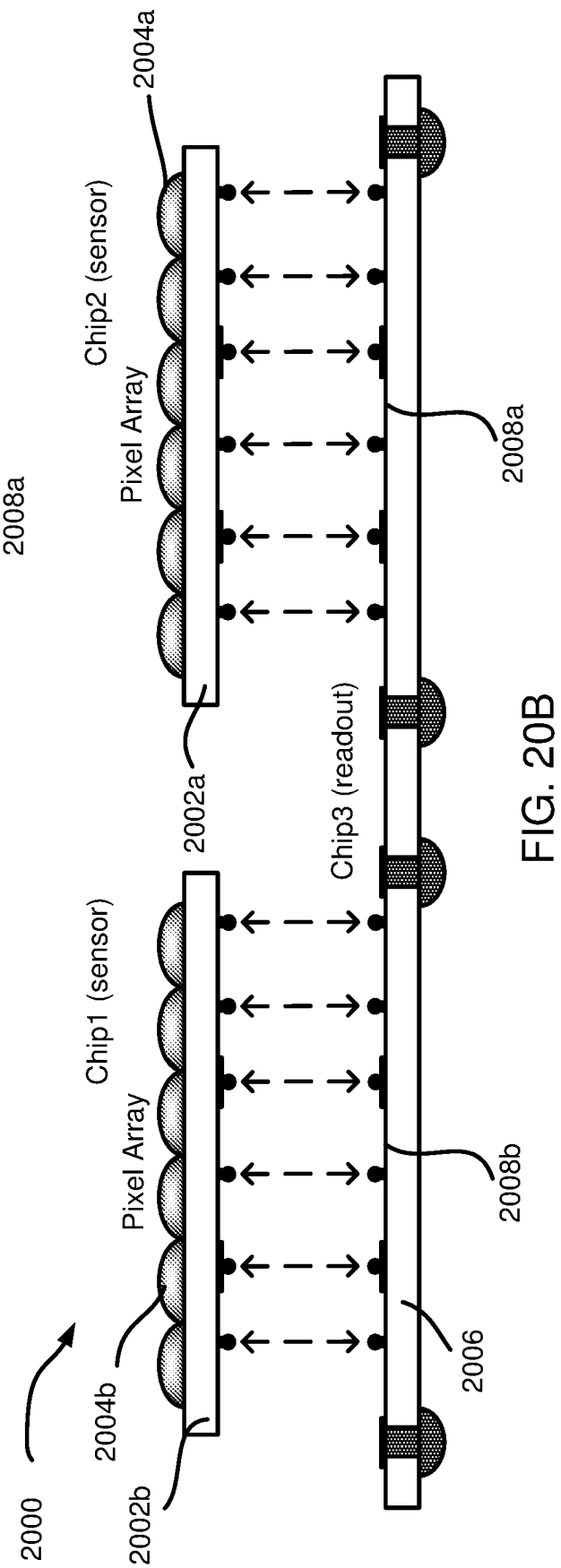

FIG. 20B

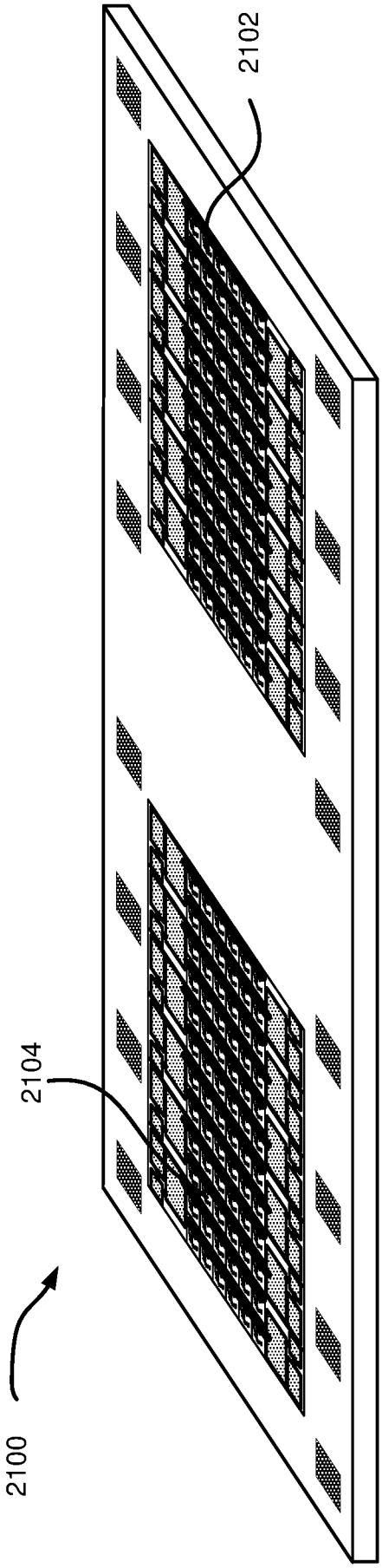

FIG. 21A

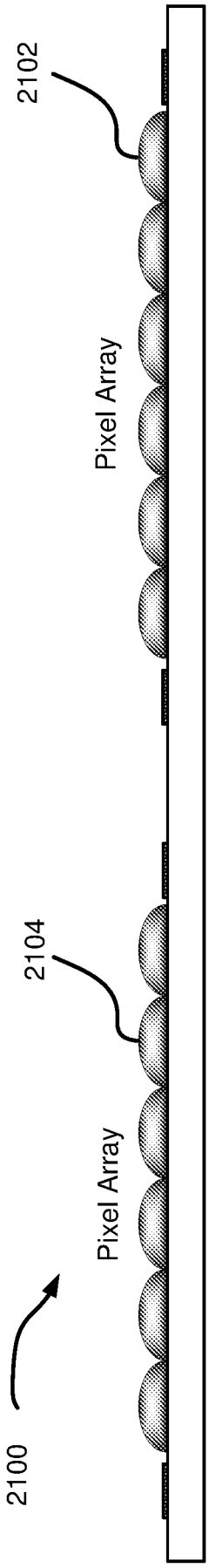

FIG. 21B

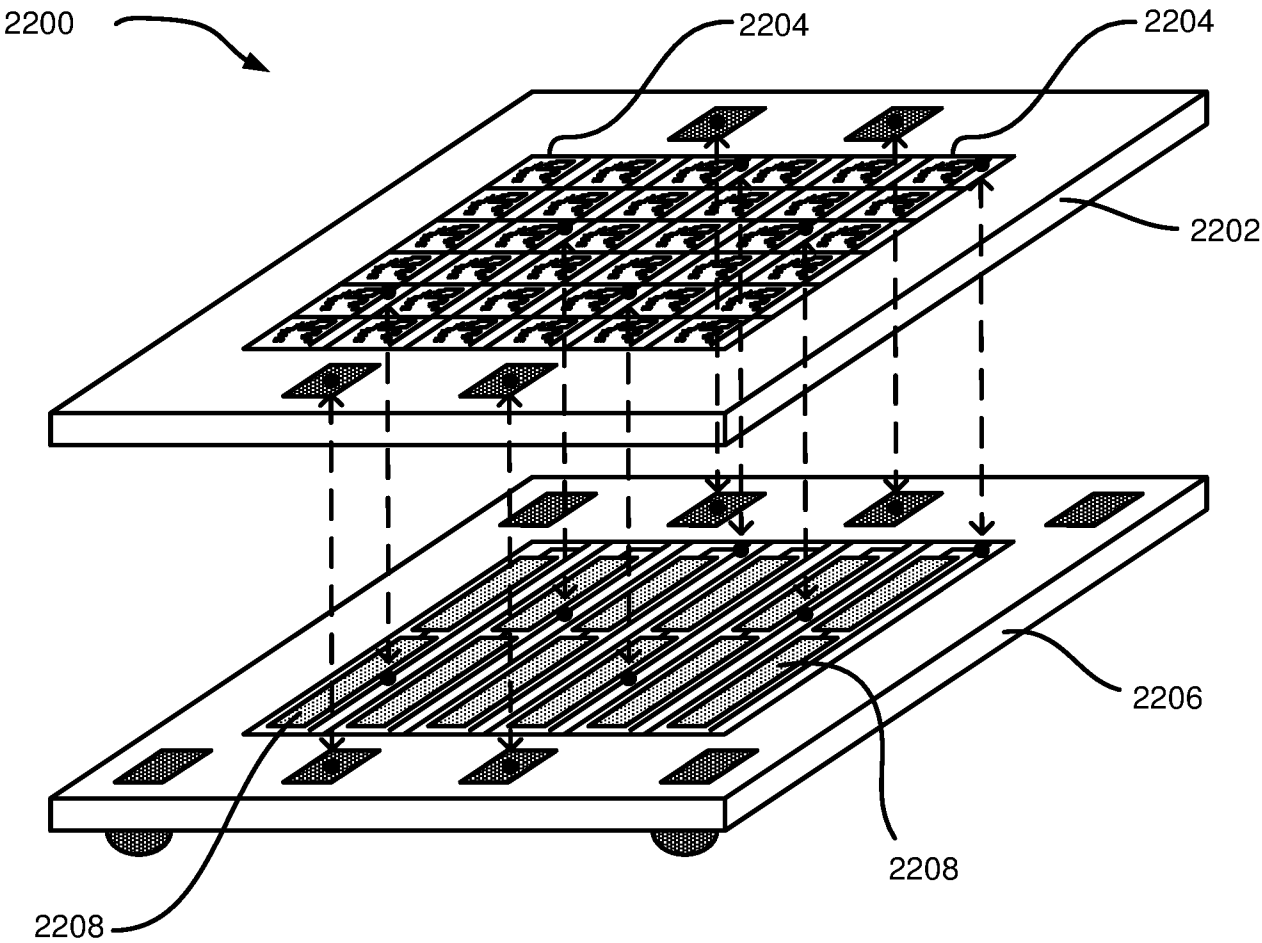

FIG. 22A

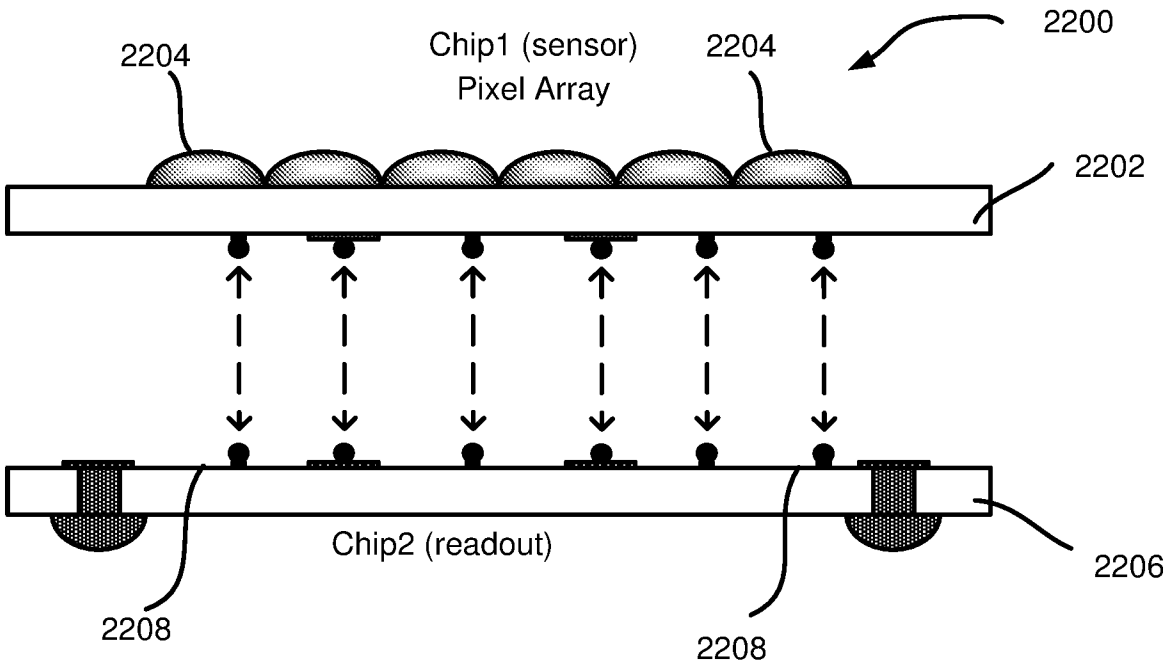

FIG. 22B

INTERNATIONAL SEARCH REPORT

International application No.
PCT/US 20/36623

A. CLASSIFICATION OF SUBJECT MATTER

IPC - H04N 5/357; A61B 5/00 (2020.01)

CPC - H04N 5/357; G01N 21/8851; A61B 5/7203; G01J 2001/4238; H04N 1/409; H04N 1/4092; G01N 21/64; G01N 21/6408; G01N 21/6486; G01N 21/6456; G01N 21/6428; G01N 2021/6439; G01N 2021/7786; A61B 1/00009; A61B 5/0071; G06T 7/136; G06T 2207/10064

According to International Patent Classification (IPC) or to both national classification and IPC

B. FIELDS SEARCHED

Minimum documentation searched (classification system followed by classification symbols)
See Search History document

Documentation searched other than minimum documentation to the extent that such documents are included in the fields searched
See Search History document

Electronic data base consulted during the international search (name of data base and, where practicable, search terms used)
See Search History document

C. DOCUMENTS CONSIDERED TO BE RELEVANT

Category*	Citation of document, with indication, where appropriate, of the relevant passages	Relevant to claim No.
X --- Y --- A	US 2016/0183775 A1 (DEPUY SYNTHES PRODUCTS, INC.) 30 June 2016 (30.06.2016): abstract, [0045], [0047], [0066], [0108]-[0109], [0171]	1, 11-13, 17-19, 21, 28 --- 5, 14-16, 20, 25-27 --- 2-4, 6-10, 22-24
Y	US 2009/0129695 A1 (ALDRICH et al.) 21 May 2009 (21.05.2009): abstract, [0018], [0073]	5
Y	US 2011/0213252 A1 (FULGHUM) 01 September 2011 (01.09.2011): abstract, [0011], [0028], [0032]	14-16, 25-27
Y	US 6,300,638 B1 (GROGER et al.) 09 October 2001 (09.10.2001): abstract, col. 9 ln 52-56, col. 10 ln 49-53, col. 14 ln 37-48	20
A	US 2008/0284880 A1 (NUMATA) 20 November 2008 (20.11.2008): abstract, [0008], [0044]	2-4, 6-10, 22-24

☐ Further documents are listed in the continuation of Box C. ☐ See patent family annex.

* Special categories of cited documents:
"A" document defining the general state of the art which is not considered to be of particular relevance
"D" document cited by the applicant in the international application
"E" earlier application or patent but published on or after the international filing date
"L" document which may throw doubts on priority claim(s) or which is cited to establish the publication date of another citation or other special reason (as specified)
"O" document referring to an oral disclosure, use, exhibition or other means
"P" document published prior to the international filing date but later than the priority date claimed
"T" later document published after the international filing date or priority date and not in conflict with the application but cited to understand the principle or theory underlying the invention
"X" document of particular relevance; the claimed invention cannot be considered novel or cannot be considered to involve an inventive step when the document is taken alone
"Y" document of particular relevance; the claimed invention cannot be considered to involve an inventive step when the document is combined with one or more other such documents, such combination being obvious to a person skilled in the art
"&" document member of the same patent family

Date of the actual completion of the international search	Date of mailing of the international search report
26 August 2020	21 SEP 2020

Name and mailing address of the ISA/US	Authorized officer
Mail Stop PCT, Attn: ISA/US, Commissioner for Patents P.O. Box 1450, Alexandria, Virginia 22313-1450 Facsimile No. 571-273-8300	Lee Young Telephone No. PCT Helpdesk: 571-272-4300