United States Patent

[11] 3,631,242

[72] Inventor **Earl Leonard Williams**
Medina, Ohio

[21] Appl. No. **834,006**
[22] Filed **June 17, 1969**
[45] Patented **Dec. 28, 1971**

[73] Assignee **Simmons Company**
New York, N.Y.

[54] **FLUOROSCOPE TOP FOR CARDIAC BED WHICH IS SWINGABLE ABOUT A VERTICAL AXIS OF THE BED**
6 Claims, 5 Drawing Figs.

[52] **U.S. Cl.** **250/55,** 5/66, 108/139, 269/324
[51] **Int. Cl.** **G03b 41/16**
[50] **Field of Search** 250/54–58; 269/322–328; 5/60, 66; 108/139

[56] **References Cited**
FOREIGN PATENTS
1,366,952 6/1964 France 269/324

Primary Examiner—James W. Lawrence
Assistant Examiner—A. L. Birch
Attorney—Luedeka, Fitch, Even, Tabin & Luedeka

ABSTRACT: A fluoroscope top for a vehicular invalid bed or the like upon which the patient may be trundled to the site of the fluoroscopic examination. The patient is supported upon an X-ray transparent pallet which is pivoted at one side edge, somewhat medially thereof, on a supporting underframe upon which it may be swung clear of the understructure of the bed and transversely thereof to emplace the upper part of the patient's body into a radiation field free of the shielding understructure of the bed. The pallet is supported during such movement and at the transverse position by an auxiliary carriage that is detachably connected to the pallet at the head end thereof.

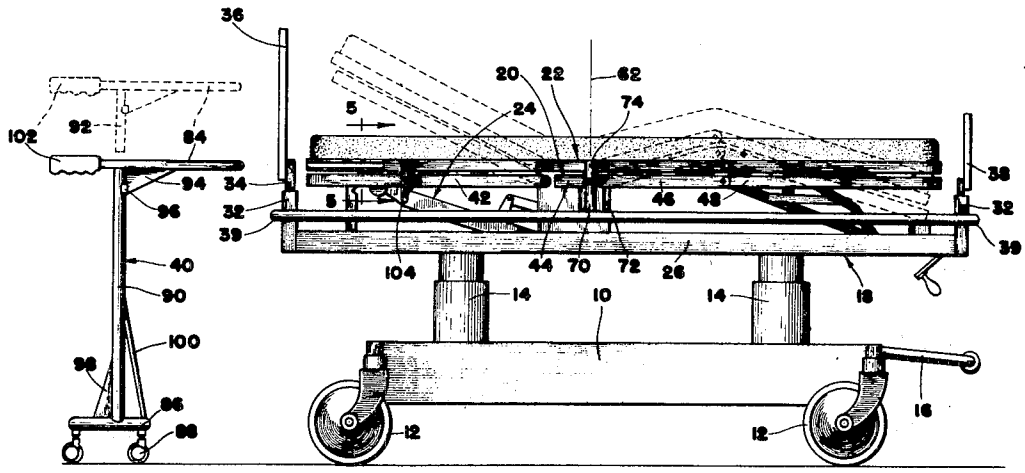

FIG. 1

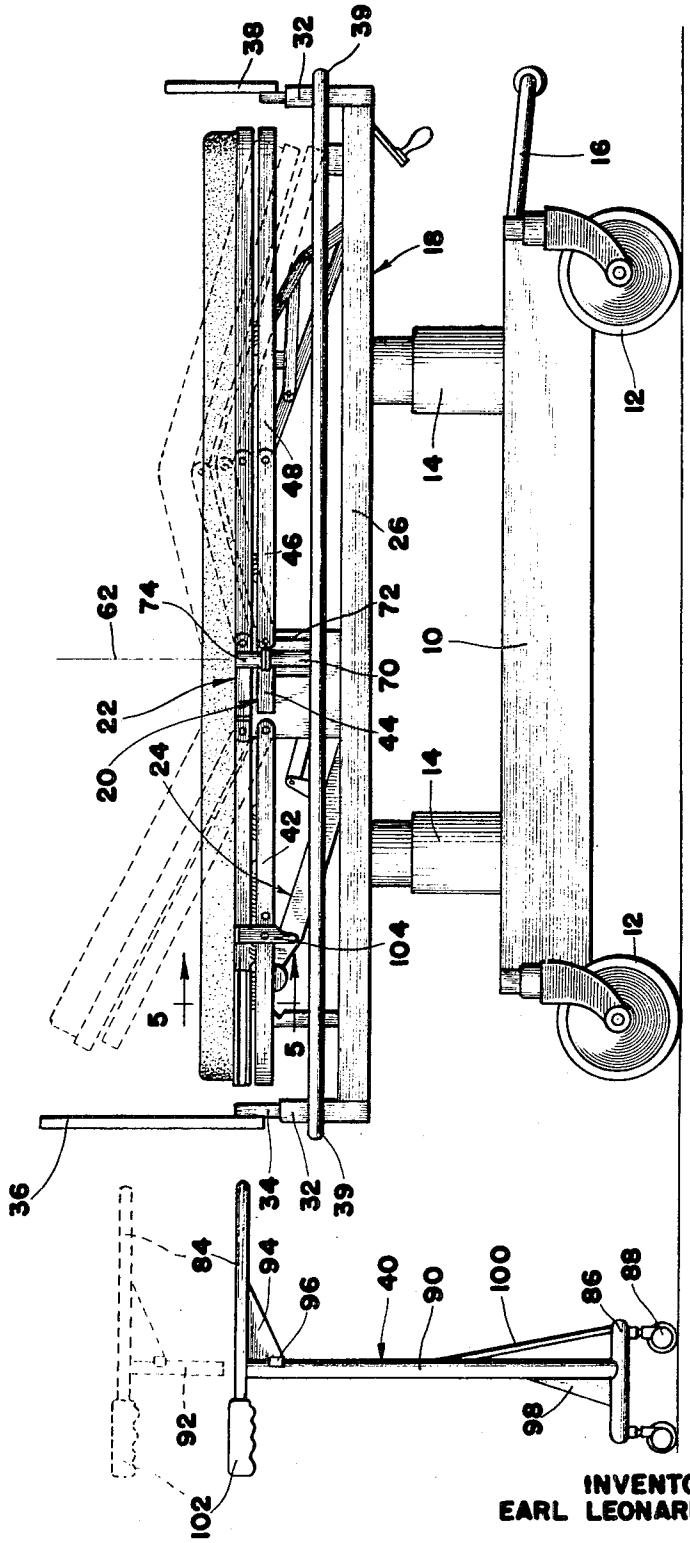

INVENTOR
EARL LEONARD WILLIAMS

Anderson, Luedeka, Fitch, Even & Tabin
ATTYS.

FIG. 2

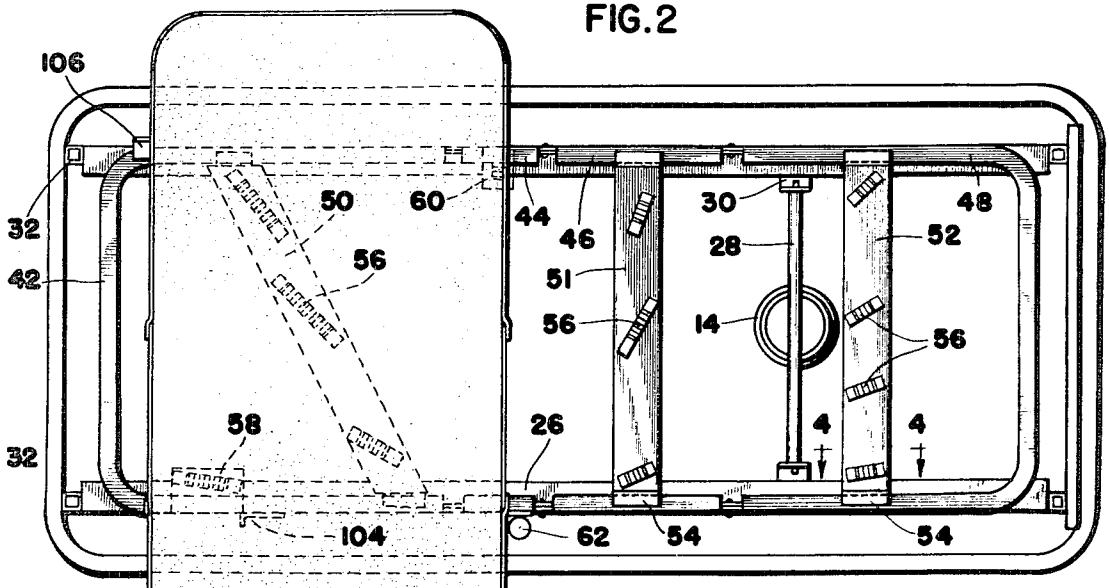

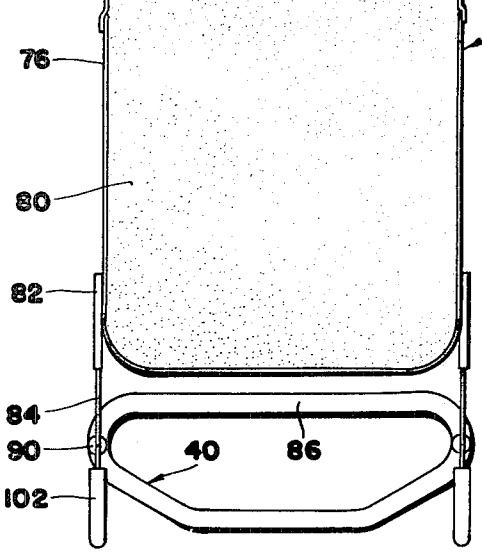

FIG. 4

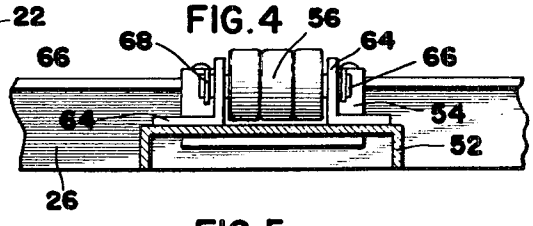

FIG. 5

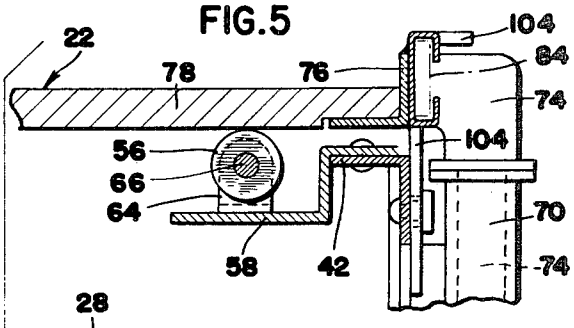

FIG. 3

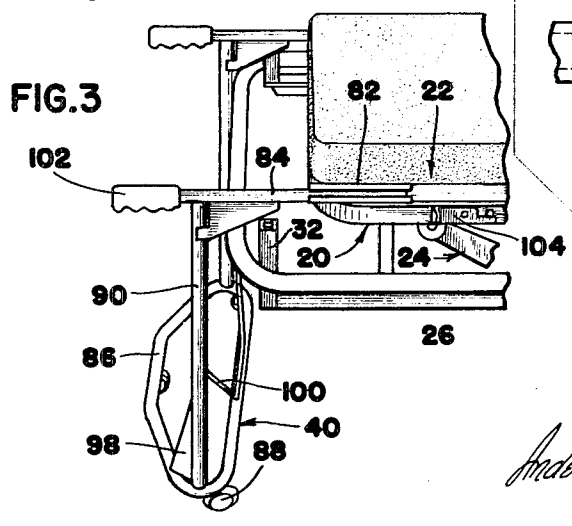

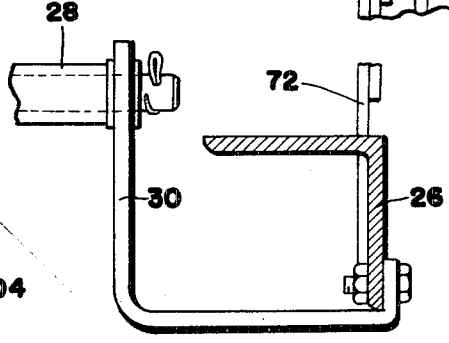

INVENTOR
EARL LEONARD WILLIAMS

Anderson, Luedeka, Fitch, Even & Tabin
ATTYS.

FLUOROSCOPE TOP FOR CARDIAC BED WHICH IS SWINGABLE ABOUT A VERTICAL AXIS OF THE BED

This invention relates to equipment for facilitating the fluoroscopic examination of cardiac patients, and particularly, to an X-ray transparent top for a vehicular bed or stretcher which permits the patient to be wheeled into the X-ray examination area, and which, without requiring movement of the patient from his supine position on the bed or stretcher, permits him to be placed directly between the radiation source and receiver by turning the entire top of the device to isolate the patient from the understructure of the vehicle.

It is an object of this invention to provide equipment to facilitate the fluoroscopic examination of the upper portion of the body with a minimum of disturbance of the patient for the sake of such examination.

It is a more particular object of the invention to provide such facility in a bed or stretcher having a body supporting surface of the sectional or articulated type upon which the patient can be placed into the various attitudes required for any particular treatment or status, and into which he can be placed hurriedly should an emergency be encountered during examination.

In order to facilitate the fluoroscopic examination of the body cavity and its organs, the vehicular bed of this invention provides a body-supporting pallet which, in its parts in immediate proximity to the body, is transparent to X-radiation.

The pallet is mounted on a supporting frame in such a way that it may be pivoted thereon about a vertical axis located at one side of the pallet, approximately medially thereof, so that the pallet when turned is disposed transversely of the long axis of the bed, with approximately a half portion thereof extending outwardly over the side of the bed. To facilitate this swinging movement, as well as to support the body pallet in this transverse, outwardly extending position, a separate auxiliary carriage is provided which is itself a wheeled or castered vehicle that may be detachably connected with the body pallet by means of quick-detachable connections at the sides of the free end of that portion of the pallet which extends outwardly from the bed in the transverse position.

Because such a bed should desirably serve all of the usual hospital bed functions as well, the body-supporting pallet and its directly supporting underframe are each articulated on corresponding transverse hinge axes which, as indicated by the broken line positions of FIG. 1, permit a patient reposed thereon to be placed in a sitting or half-sitting reclined position.

When the patient support pallet is in other than horizontal position, e.g., when its several articulated sections are in the broken line position of FIG. 1, it cannot normally be rotated relative to its supporting underframe, the two being effectively interlocked against relative swinging movement by the weight of the patient when elevated from the flat, horizontal position. When, however, the pallet and underframe are flat, rotation of the pallet on the underframe is made easy by rollers which are mounted on the supporting underframe and which engage the undersurface of the pallet. To prevent unintended movement of the two there is provided on one side of the head wing of the supporting underframe a fixed stop which (FIG. 2) serves to limit the swinging movement of the body pallet in the transverse position, and serves as well as a positioning stop to be engaged by the side of the head section of the body pallet on its subsequent return into position overlying on the underframe. To prevent unintended swinging movement of the body pallet into the transverse position of FIG. 2, there is similarly provided on the pallet to side of the head section of the underframe a pivoted stop which, supine erect as in FIG. 1, imprisons the body pallet between itself and the opposite fixed stop, but and removed as in FIG. 2, permits the pallet to be swung out to the transverse position, as for X-ray examination.

The vertical axis about which the body pallet swings is located on the seat section of the pallet so that only one hinge axis, that between the seat section and the head section of the pallet, does not overlie the supporting underframe when the pallet is transverse of the bed, as in FIG. 2. Inasmuch as the head section of the pallet is independently supported in that position by the auxiliary carriage, and inasmuch as the pivot axis of the pallet to the underframe prevents tipping of the seat section of the pallet, the supine body is firmly supported by the head section of the pallet, the hinge axis between the head a nd the seat sections thereof providing whatever slight accommodation may be occasioned by any unevenness of the floor traversed by the auxiliary carriage, such unevenness usually being of insufficient degree to be troublesome to the condition of the patient.

The invention is hereinafter explained in detail by reference to the accompanying drawings in which:

FIG. 1 is a side elevational view of a vehicular bed in accordance with this invention illustrating also the auxiliary carriage which is detachably associated with the patient-supporting pallet for rotating the same to a position transverse of the bed to remove the supine body from the masking effect of the metallic undercarriage and to place it in the radiation field for examination;

FIG. 2 is a plan view of the bed shown in FIG. 1, showing the auxiliary carriage coupled with the body-supporting pallet, and with the latter swung out transversely of the long axis of the bed;

FIG. 3 is a perspective view showing in greater detail the auxiliary carriage and the manner in which it is coupled in supporting relation with the body-support pallet;

FIG. 4 is a fragmentary sectional view taken along the line 4—4 of FIG. 2, illustrating in part the mounting of the roller supports upon which the body-supporting pallet is movably mounted; and

FIG. 5 is a fragmentary sectional view taken along the line 5—5 of FIG. 1, illustrating the roller support for the body-supporting pallet, and illustrating in section the coupling members of the auxiliary carriage and body-supporting pallet.

For a detailed description reference should be made initially to FIG. 1, which illustrates the undercarriage of the bed or stretcher as a wheeled platform **10** supported by relatively large castering wheels **12** for easy movement, and having thereon a pair of hydraulically operated telescopic supporting columns **14**. The undercarriage is preferably of the character disclosed in my U.S. Pat. NO. 3,393,004, issued July 16, 1968, i.e. the hydraulic columns **14** operated either together or independently by means of a pump pedal **16** and controls (not shown), located preferably at the foot end of the vehicle.

An upper frame structure **18**, which provides an underframe **20** for immediately supporting a body pallet **22**, as well as the operating mechanism **24** for placing it into various positions of which two are illustrated in FIG. 1, is essentially the structure and mechanism of a so-called "two-crank" spring, and will be recognized as the form particularly disclosed in U.S. Pat. No. 2,658,210, issued Nov. 10, 1953, to the assignee of this invention.

The upper frame structure **18** comprises a pair of angle iron side rails **26** which are connected together by suitable crossmembers (not shown) and to the top of the telescopic columns **14**, as shown partially in FIGS. **2** and **5** by tubular crossbars **28** having underslung angle brackets **30** pivoted at each end of the bars **28** and secured to the side rails **26** below the crossbars **28**. At their ends, the side rails **26** are provided with upwardly open tubular sockets **32** which receive the stakes **34** of a removable headboard **36** at one end of the bed and a removable footboard **38** at the other. A bed-encircling bumper **39** is secured to the ends of the side rails **26**. As will be apparent from FIGS. **2** and **3** the headboard **36** of the bed is removed in order to couple the auxiliary carriage **40** with the body pallet **22**, and to permit the latter to be swung into the transverse position of FIG. **2**.

The underlying supporting frame **20** for the body pallet **22** is divided at transverse hinge axes into a head section **42**, which is movably mounted upon a fixed seat section **44**, thigh section **46** likewise hinged to the seat section, and a foot section **48**

hinged to the thigh section. The particular form of operating mechanism **24** for positioning the underlying support frame **20** and the overlying body pallet **22** in the several attitudes of which it is capable is not a part of this invention, and reference is made to the aforementioned U.S. Pat. No. 2,658,210 for those details. It is sufficient here to recognize that in the manner essentially conventional for two-crank springs, a crank is provided for the manipulation of the head section **42** of the underlying support frame, and a second crank is provided for the independent adjustment of the thigh section **46**, and, with the thigh section, in following relation, the foot section **48** as well. As is also conventional, the cranks are of the "-folding" type so that they can be retracted to a nonintruding position when not in use, (FIG. **1**).

In place of the usual mattress-supporting fabric, the supporting underframe **20** is provided instead with three crossmembers **50**, **51** and **52** (FIG. **2**) which are inverted channels which extend transversely of the head section **42**, thigh section **46**, and foot section **48**, respectively, of the supporting underframe. They are supported from, and beneath the level of the side rails of the underframe **20** on stepped brackets **54**, the crossmember **50** in the head section **42** of the supporting underframe **20** being positioned diagonally thereof for appropriate location of the sets **56** of rollers which are mounted on each of the several crossmembers, and also on individual stepped plates **58** and **60** secured to the side rails of the frame **20** in the head section **42** and seat section **44**.

The roller sets **56** are arrayed in banks with their rotational axes radiating from the vertical pivot axis **62** about which the body pallet turns. As indicated in FIGS. **4** and **5**, the roller sets comprise a pair of angle brackets **64** welded to their respective supports and connected by an axle **66** which supports two or more rollers depending upon the location and the load. The axle pin is maintained in assembled relation with the mounting brackets by suitable locking rings **68**.

The pivot axis **62** about which the body pallet **22** turns relative to the underlying support frame **20** consists of a tubular socket bearing **70** which is secured as by welding to one of the upright supports **72** for the seat section **44** of the supporting underframe to receive therein a pin or trunnion **74** similarly welded to the side rail of the seat section of the body pallet.

The body pallet **22**, as earlier indicated, is articulated on hinging axes corresponding with those of the underlying support frame. The pallet consists of a perimeter frame **76** of upwardly open angle iron (FIG. **5**), the sections of which are hinged together by shoulder rivets. The actual body supporting surface may be a relatively thick sheets **78** of X-ray transparent material of strength adequate to support the weight of the body between the perimeter frames. It should be of a material that will also withstand the effects of sanitizing chemicals. Its undersurface should be flat and smooth, inasmuch as it is directly in contact with the supporting rollers **56** of the underframe, and should be sufficiently resistant to crushing to take no permanent impression from the rollers, inasmuch as such local densification reveals itself as a shadow in the radiation "picture".

Secured to the head section **80** of the body pallet **22** and welded thereto in flanking relation is a pair of channel-shaped sockets or scabbards **82** which receive, in sliding relation, the bayonetlike probes **84** of the auxiliary carriage **40**. The sockets **82** are C-shaped in cross section (FIG. **5**) to prevent the disengagement of the probes by sideward displacement, and yet are sufficiently open to permit visual observation by the attendant, while making the insertion. The assembled relationship of the probes of the auxiliary carriage with the sockets is shown in detail in FIGS. **3** and **5**.

The auxiliary carriage **40** includes a tubular base frame **86** supported by three widely spaced castering wheels **88**. Extending upwardly from the sides of the base frame are a pair of tubular posts **90** which are spaced apart the width of the body pallet **22** and are of a height such as to place the probes **84** at the upper ends thereof at the level of the body pallet when the bed is fully raised on its wheeled undercarriage, and when the body pallet **22** is flat, i.e., horizontal thereon.

The probes are swiveled in the tops of the posts **90** by pins **92** welded perpendicular thereto, and the probes extend well forwardly from the auxiliary carriage for the insertion of a comfortable length thereof over the end of the bed and into the receiving sockets **82** at the sides of the free end of the body pallet **22**. Because of their swiveled, cantilevered relation to the upper ends of the posts **90**, the probes are braced by gusset plates **94** welded respectively to the probes and to a semicylindrical bearing pad **96** which assists in transmitting the load from the probes **84** to the posts **90**.

In similar fashion the posts **90** are braced to the base frame **86** at their lower ends by gusset plates **98** welded to both, and are additionally braced by corner braces in the form of a V-shaped rod **100** welded at its ends to the posts **90** adjacent their upper ends, and at the apex of the V to the base frame **86**. The probes extend rearwardly from the posts **90** and are fitted with handle grips **102** by means of which the carriage is steered into coupled relationship with the body pallet.

The swivel mountings of the probes **84** by the insertion of the pins **92** into the open upper ends of the posts **90** serves several purposes, most importantly providing for easy insertion of the probes into their sockets **82** on the body pallet **22**, notwithstanding manufacturing tolerances which cumulatively can cause disparity between the heights and spacings of the probes **84** and their receiving sockets **82**. Secondarily, the swiveling of the probes permits them to be turned toward each other when not in use, and thus to reduce the space required by the carriage. To further the latter purpose, the handle portions of the probes may also alternatively be bent at right angles to the long axes of the probes.

When the coupling is made, the headboard **36**, as earlier indicated, having first been removed by lifting its supporting stakes **34** from the tubular sockets **32** of the bed underframe, the steering handles of the auxiliary carriage are used to "-walk" the body pallet **22** around its vertical pivot axis **62** and into the transverse position of FIG. **2**. Before such pivoting may be accomplished it is first necessary to retract a movable stop **104** pivoted to the side of the head section **42** of the support frame **20**, the limiting position of FIG. **2** being determined by a fixed stop **106** on the opposite side of the head section **42**. The fixed stop **106** also serves as the limiting stop for the return of the body pallet into fully superposed relationship to the supporting underframe. When that position is restored, the retractable stop **104** is again raised to prevent unintended dislodgement of the pallet **22**, and the auxiliary carriage **40** is withdrawn from coupled relation with the pallet, and the removable headboard **36** is replaced.

With the aforedescribed arrangement of pivoted, carriage-supported swinging movement of the X-ray pallet, the patient can be removed from the field of the examination device and placed in a matter of seconds into any of the attitudes of which the bed itself is capable, as may be required in emergencies experienced during examination.

The features believed patentable are set forth in the appended claims.

What is claimed is:

1. A fluoroscope top for vehicular invalid beds or the like including,

a pallet of X-ray transparent material for supporting the supine human body,

an underlying support frame,

said pallet and underlying support frame being pivotally connected at one side of the pallet medially thereof to guide the pallet in swinging movement about a vertical axis through the pivotal connection thereby to place the long axis of the pallet transverse to the long axis of the bed with a semiportion of the pallet extending laterally outwardly from the bed,

a plurality of rolling support means between the support frame and pallet mounted for rotation on one of them and engaging the other to support the pallet on the frame and to facilitate said swinging movement, and

a separate carriage detachably connectable to the pallet at the free end of said semiportion to support the same in

said outwardly extending position and in movement to and from said position.

2. The fluoroscope top of claim 1 wherein the pallet and underlying support frame are each articulated for hinging movement at corresponding transverse hinge axes located between said vertical pivot axis and said free end, and wherein said rolling support means are mounted on said frame and engage the underside of said pallet.

3. The fluoroscope top of claim 1 wherein the pallet and underlying support frame are each articulated at a plurality of corresponding transverse axes for relative hinging movement of the sections defined therein by said axes to move a body reposed supinely thereon into a reclined sitting position, said support frame having frame-adjusting apparatus connected thereto for maintaining any selected position of said sections, said pallet having but one of said axes between said pivotal connection and said free end, said support frame and pallet having interengageable stop means for halting their relative swinging movement when their long axes are respectively parallel and transverse.

4. The fluoroscope top of claim 1 wherein the pivotal connection of the pallet to the support frame is a pin on one of them received in a socket on the other and separable therefrom by lifting the pallet, thereby disconnecting the pallet from the support frame.

5. The fluoroscope top of claim 1 wherein the detachable connection of the carriage to the pallet comprises a pair of paced, elongated, horizontal probes on said carriage and a pair of mating sockets secured to the sides of said pallet at its free end, the carriage being connectable to the pallet by movement of the carriage longitudinally of the pallet to insert the probes of the carriage over the end of the bed into their mating sockets on the pallet.

6. The fluoroscope top of claim 5 wherein the probes are swingable on vertical axes on said carriage and also vertically adjustable thereon to facilitate the insertion of the probes into the sockets of the pallet.

* * * * *