Aug. 13, 1929. A. BERIA 1,723,998

METHOD OF AND APPARATUS FOR CUTTING LENGTHS FROM A CONTINUOUSLY FED BUNDLE OF ARTIFICIAL THREADS, FILAMENTS, AND THE LIKE

Filed April 19, 1928

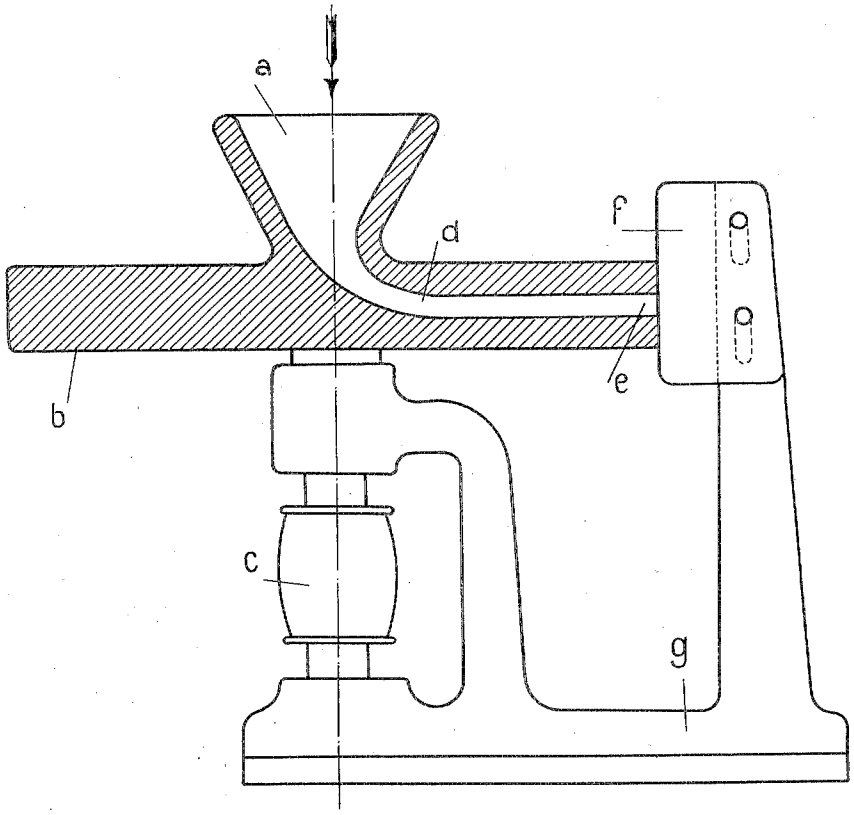

Inventor

Antonio Beria

By F.T. and J.F. Brandenburg.

Attorneys.

Patented Aug. 13, 1929. 1,723,998

UNITED STATES PATENT OFFICE.

ANTONIO BERIA, OF TURIN, ITALY, ASSIGNOR TO SOCIETÁ ITALIANA LAVORAZIONI MECCANICHE, OF TURIN, ITALY.

METHOD OF AND APPARATUS FOR CUTTING LENGTHS FROM A CONTINUOUSLY-FED BUNDLE OF ARTIFICIAL THREADS, FILAMENTS, AND THE LIKE.

Application filed April 19, 1928, Serial No. 271,387, and in Italy April 20, 1927.

This invention relates to a method and apparatus for cutting a bundle of artificial threads, filaments, and the like, particularly artificial silk, into any desired length or lengths as the bundle is rapidly and continuously fed from a spinning machine.

In prior cutting machines and methods, it is necessary to feed the bundle of threads at a comparatively low speed in order to obtain short pieces of uniform length. If the bundle is fed at a high rate of speed, the cut pieces are irregular in length and the result, therefore, unsatisfactory.

The main difficulty encountered by the known cutting machines when working at a high speed is due to the fact that the feeding of the bundle of threads is not uniform between the successive cuts, because of the comparatively light weight of the thread.

This difficulty is overcome by the present invention which subjects the bundle of threads to centrifugal action as it is fed to the cutter. The centrifugal action insures a uniform feeding of the threads to the cutter between successive cuts.

It has also been proposed to cut the thread as it leaves the spinning nozzle of the spinning machine, but there is the disadvantage under those conditions that the speed at which the bundle is fed to the cutter depends on the spinning speed.

On the other hand, my invention, which provides for the cutting operation at a distance from the spinning nozzles, makes it possible to regulate the speed of the thread as it is fed to the cutter and permits the thread to acquire the desired degree of compactness before being cut into lengths.

The accompanying drawing shows, by way of example, a side view partly in section, of an embodiment of a cutting apparatus according to my invention.

The apparatus comprises a hopper *a* formed integral with a disc *b*, and rotated at a relatively high speed on its vertical axis, shown in dot-and-dash line, by any suitable means such as a belt engaging a pulley *c* secured to the spindle of said disc *b*.

The bundle of filaments or threads, of artificial silk for example, issuing at a given constant speed from the spinning machine or machines (not shown) is fed to the hopper *a* in substantially the direction indicated by the arrow and passes through the angular opening in the bottom thereof. As shown, this opening extends to the periphery of the disc *b*, and as soon as the bundle reaches the position *d*, the rapid rotation of the disc subjects it to centrifugal action, causing it to be fed along the said opening or passage to the point *e*. One or more cutters *f* are disposed with their cutting edges at the periphery of the disc *b*.

In every revolution of the disc *b*, a predetermined length of the bundle of thread issues from the outer end of passageway *e*, is cut off as the passageway *e* passes the cutter *f*, and drops by it own weight to the point *g*.

The length of the cut pieces may be changed by adjusting the speed at which the thread is fed to the hopper *a*, or the angular speed of the disc *b*. Two or more cutters similar to cutter *f* may also be provided at spaced points around the periphery of the disc *b* to alter the length of the cut pieces.

I claim:

1. In an apparatus for cutting lengths from a supply of thread, means for subjecting the thread to the action of centrifugal forces and cutting means arranged at right angles to the direction of said action for cutting the thread into pieces of uniform length.

2. In an apparatus for cutting lengths from thread, the combination of a rotatable disc having a passageway leading from the center of one of its faces and terminating on its periphery, and a stationary cutter having its cutting edge located at the periphery of said disc.

3. In an apparatus for cutting lengths from thread, the combination of a rotatable disc having a passageway terminating on its periphery, a supply hopper arranged on said disc coaxially therewith and leading into the said passageway, and a stationary cutter having its cutting edge located at the periphery of said disc.

4. In an apparatus for cutting lengths from thread, the combination of a rotatable disc having a passageway terminating on its periphery, a supply hopper arranged on said disc coaxially therewith and leading into the said passageway, means for rotating said disc, and a stationary cutter having its cutting edge located at the periphery of said disc.

5. In an apparatus for cutting lengths from thread, the combination of a base, a spindle supported on said base for rotational movement, a disc mounted on said spindle and

adapted to rotate therewith, said disc having a passageway leading from the center of one of its faces and terminating on its periphery, a stand arranged on said base, and a cutter mounted on said stand and having its cutting edge located at the periphery of said disc.

6. A method for cutting uniform lengths from a supply of thread, consisting in subjecting the thread to the action of centrifugal force and cutting it at right angles to the direction of said action.

7. A method for cutting uniform lengths from a supply thread consisting in continuously feeding the thread to a given point, subjecting the thread at that point to centrifugal action substantially at right angles to the direction of feeding, and cutting the thread at right angles to the direction of the centrifugal action.

In testimony whereof I set my hand.

ANTONIO BERIA.