March 15, 1932. C. T. FRANTZ 1,849,666

CONTAINER

Filed Oct. 7, 1929

Fig. 1

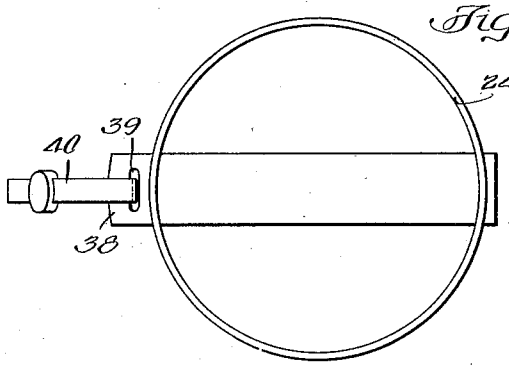

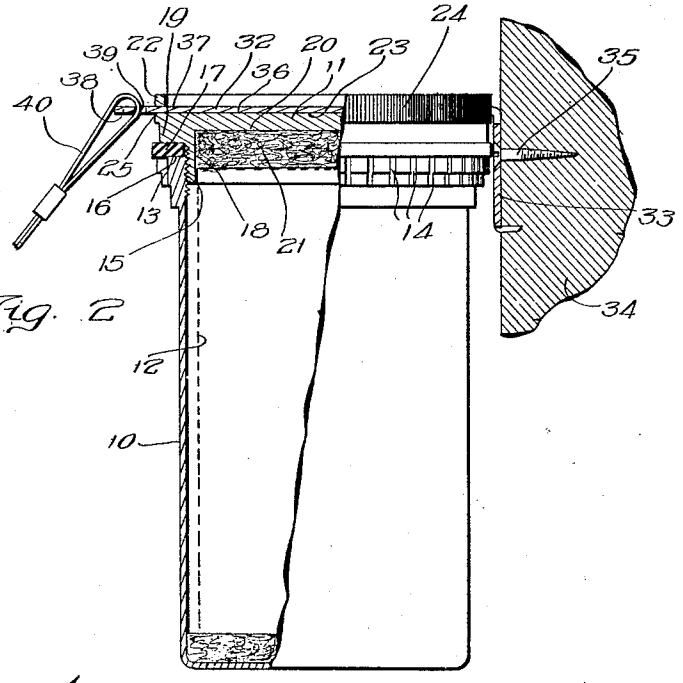

Fig. 2

Fig. 4.

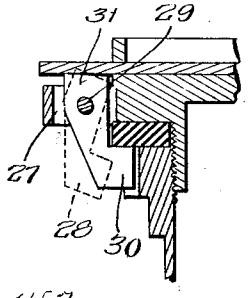

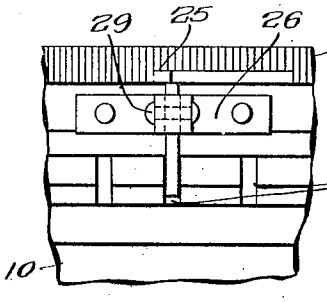

Fig. 3.

Witness
William R. Kilroy

Inventor
Charles T. Frantz
By George I. Haight
Atty.

Patented Mar. 15, 1932 1,849,666

UNITED STATES PATENT OFFICE

CHARLES T. FRANTZ, OF LOS ANGELES, CALIFORNIA, ASSIGNOR TO RECORDING THERMOMETER COMPANY, OF LOS ANGELES, CALIFORNIA, A CORPORATION OF WASHINGTON

CONTAINER

Application filed October 7, 1929. Serial No. 398,021.

This invention relates to containers.

An object of the invention is to provide a container more particularly adapted to house a thermometer, including thermostatic elements responsive to changing temperature, and wherein the container or housing is made up of metal having high thermal conductivity so as to insure correspondence of temperatures within and without the container, and enable the thermostatic elements within the container to accurately register external temperatures while being protected against moisture, corrosion, and the like.

Another object of the invention is to provide a container of the character referred to, having means for sealing the container against the entrance of moisture and locking the same against unauthorized tampering, said means including a closure which may be locked in various positions to insure a sealing fit.

Still another object of the invention is to provide a bracket for supporting the container, which bracket is incorporated in the locking means in such a way that the container and closure are locked to the bracket by the same means utilized for locking the closure in its sealing position.

Other and further objects of the invention will appear hereinafter.

In the drawings forming a part of this specification, Fig. 1 is a top plan view of the container and the supporting bracket therefor. Fig. 2 is a partial vertical sectional view through the container, the bracket, and the supporting wall therefor. Fig. 3 is an enlarged fragmentary front elevational view of the container, showing the latching mechanism associated therewith. And Fig. 4 is an enlarged vertical sectional view through the container and the locking means utilized in connection therewith.

As shown in the drawings, the invention comprises a cylindrical body portion and detachable closure made up of metal having high thermal conductivity, to adapt the same for use in housing and protecting a recording thermometer, including thermostatic elements, a stylus and a recording mechanism, all as shown in my pending application, Serial No. 15,745, filed March 16, 1925.

As appears from the said pending application, the thermometer proper is intended to be placed in a refrigerator car to record temperatures during the travel of the car from place to place. This necessitates the use of a protective housing of a particular character, together with locking means for preventing unauthorized tampering with the thermometer, and the invention herein described provides a novel structure of this type.

In the drawings the cylindrical casing is indicated generally by the reference character 10, the closure by the reference character 11, and the thermometer proper, shown in dotted lines in Fig. 2 by the reference character 12. The upper end of the cylindrical body portion 10 is provided with a laterally projecting annular shoulder 13, having a plurality of radially disposed grooves or notches 14 which extend at intervals entirely around the annular shoulder 13. The inner surface of the mouth of the container 10 is threaded as indicated at 15, adapting it for the reception of a portion of the closure 11. The upper edge surface 16 of the container provides a seat for a gasket or sealing ring 17, preferably of rubber, fibre, or other compressible substance adapted to provide a sealing fit between the closure and the container. The closure 11 is disc-like in form with a projecting annular flange 18 exteriorly threaded to engage the threaded portion 15 of the mouth of the container. The closure is also provided with an annular shoulder 19 adapted to bear upon the sealing member. The flange 18 defines a cavity 20 in the under surface of the closure 11 adapted to receive absorptive material 21 which aids in rendering the interior of the container free of moisture. The closure 11 is further provided with an annular rib 22 at its upper end, said rib projecting an appreciable distance above the top 23 of the closure. The outer surface of the rib 22 is roughened or knurled, as indicated at 24 to facilitate rotation of the closure with respect to the container so as to engage and disengage the threaded connection therebe-

tween. The rib 22 is provided with diametrically disposed, horizontally extended slots 25, best shown in Fig. 2, for the reception and accommodation of a bracket hereinafter described.

Secured to the outer circumferential surface of the shoulder 19 of the closure, is a supporting strap 26, having a looped portion 27 adapted to accommodate a latch or dog 28, the latter being pivotally hung upon a pin 29 extending between the legs of the looped portion 27. The head 30 of the dog is adapted to be engaged with any one of the grooves or notches 14 in the annular shoulder 13 of the container body portion, being shown in engaged position in full lines in Fig. 4, and in disengaged position in dotted lines in said figure. The supporting strap 27 is secured in such a position as to lie under one of the slots 25 in the rib 22 as best shown in Fig. 3, and the tail 31 of the dog in its inoperative position moving across the plane defined by the slot 25.

Adapted to extend through the slots 25 of the closure 11 is the supporting bracket 32, said bracket having an anchored portion 33 permanently secured to the wall 34 by suitable means such as a screw 35. Extending substantially at right angles to the anchored portion 33 is an elongated section 36, of such size as to be admitted first through the slot 25 opposite to the dog 28, and thence through the slot 25 adjacent to the dog, the end portion 37 of this section, when extended through the latter slot, bearing upon the tail 31 of the dog 28, and rotating the same in a counter clockwise direction to bring about engagement of the head 30 of the dog with one of the notches 14 and to maintain said dog in such engagement. The extreme end 38 of the bracket is provided with an aperture 39 for the reception of the strap of the seal 40 of a type commonly used in connection with railroad equipment.

In operation, assuming the container to be in position to house the thermometer as illustrated in Fig. 2, and it is desired to withdraw the thermometer at the end of the journey, the seal 40 may be broken. After this is done the entire container, including the closure, can be withdrawn from engagement with the bracket merely by retracting the bracket from the slots 25 in the rib of the closure. Withdrawal of the supporting portion of the bracket releases the tail of the dog, after which the dog may be retracted from its position within one of the notches 14, and the closure may then be unscrewed or unthreaded from the container body proper, permitting the thermometer to be removed from the container.

At the start of a journey a thermometer is first placed in the body portion of the container, after which the closure member, with the sealing ring 17 disposed about the annular flange 18, is applied to the container and screwed home. Due to the fact that the rotation of the closure with respect to the sealing ring, may bring the locking dog to different positions at different times, provision is made for this contingency by providing the plurality of notches or grooves, one of which will be adjacent to dog, no matter in what position it comes to rest after the closure is screwed tightly enough in position to afford a sealing fit. The container and thermometer are then adapted to be mounted upon the supporting bracket and the end of the latter is first inserted through the aperture remote from the dog, and then extended to the aperture above the dog, during this operation securing the tail of the locking dog against reverse rotation, and securely locking the closure in position against unauthorized tampering. The seal 40 is then applied to the outer end of the bracket, thereby securing the thermometer and container to said bracket in such a way that unauthorized tampering with the thermometer may be readily detected.

Although the invention has been described with particularity, it is not the intention to limit the same to the precise details shown, since variations in construction may be made without departing from the principle of the invention.

What I claim is:

1. In a container of the character described, the combination with a body member having a threaded mouth; of a closure member adapted to be threaded into said mouth; a sealing member interposed between said closure member and body member; locking means on one of said members providing a plurality of locking positions, and co-operating locking means on said other member, said latter locking means being adapted for selective engagement with any of the positions of said first locking means; and means in the form of a supporting bracket for said container, said means co-operating with said container and locking means for securing the latter in locking position when the container is engaged with said bracket.

2. In a container of the character described, the combination with a body member having a threaded mouth; of a closure member adapted to be threaded into said mouth; a sealing member interposed between said closure member and body member; locking means on one of said members providing a plurality of locking positions, and co-operating locking means on said other member, said latter locking means being adapted for selective engagement with any of the positions of said first locking means; means in the form of a supporting bracket for said container, said means co-operating with said container and locking means for securing the latter in locking position when the container is engaged

with said bracket; and a seal extending through said bracket for securing said container thereto against unauthorized tampering.

3. In a container of the character described, the combination with a body member having a threaded mouth and an annular shoulder provided with circumferentially spaced notches; a closure having a pivoted dog adapted to engage in one of said notches; and a member carried by said closure for securing the said dog in any of its various locking positions, said member being in the form of a supporting bracket extending through openings in said closure and bearing upon the tail of said dog.

4. In a container of the character described, the combination with a body member adapted to be engaged and disengaged by rotative movement and a closure member; of a supporting bracket; and means engageable with said bracket for locking the said closure member against rotative disengagement from said body member and simultaneously supporting said container on said bracket.

5. In a container of the character described, the combination with a body member and a rotatively engaged closure member; means adapted to lock said closure member in any one of a plurality of positions; and a bracket for supporting said container and operative to secure said locking means in engagement to prevent rotation when said container is engaged with said bracket.

6. In a container of the character described, the combination with a body member and a closure member; means adapted to lock said closure member in a plurality of positions; a bracket for supporting said container and operative to secure said locking means when said container is engaged with said bracket; and a seal adapted to prevent removal of said container from said bracket and to prevent disengagement of the locking means when in located relation.

7. In a device of the character described, the combination with a body member and closure member providing a container; of a bracket for supporting said container; and securing means inter-engaging with said bracket for maintaining said closure in locked relation to said body portion when the container is in supported position upon said bracket, said means being releasable by the act of detaching the container from said bracket.

8. In a container adapted to house thermostatic elements, the combination with a body member and closure member made up of metal having high thermal conductivity, said closure being adapted to be placed in sealing position with reference to said body member; a supporting bracket; and means inter-engaging with said closure member and body member adapted to be held in position to lock said closure to said container when the container is engaged with said bracket and adapted to be released from locking relation by the removal of the container from the bracket.

9. In a container adapted to house thermostatic elements, the combination with a body member and closure member made up of metal having high thermal conductivity, said closure being adapted to be placed in sealing position with reference to said body member; a supporting bracket; means inter-engaging with said closure member and body member adapted to be held in position to lock said closure to said container when the container is engaged with said bracket; and a seal for preventing removal of said container from said bracket and adapted to be released from locking relation by the removal of the container from the bracket.

In witness that I claim the foregoing I have hereunto subscribed my name this 18th day of September, 1929.

CHARLES T. FRANTZ.