C. E. BENSON.

WAVE MOTOR.

APPLICATION FILED MAR. 21, 1912.

1,068,846.

Patented July 29, 1913.

2 SHEETS—SHEET 1.

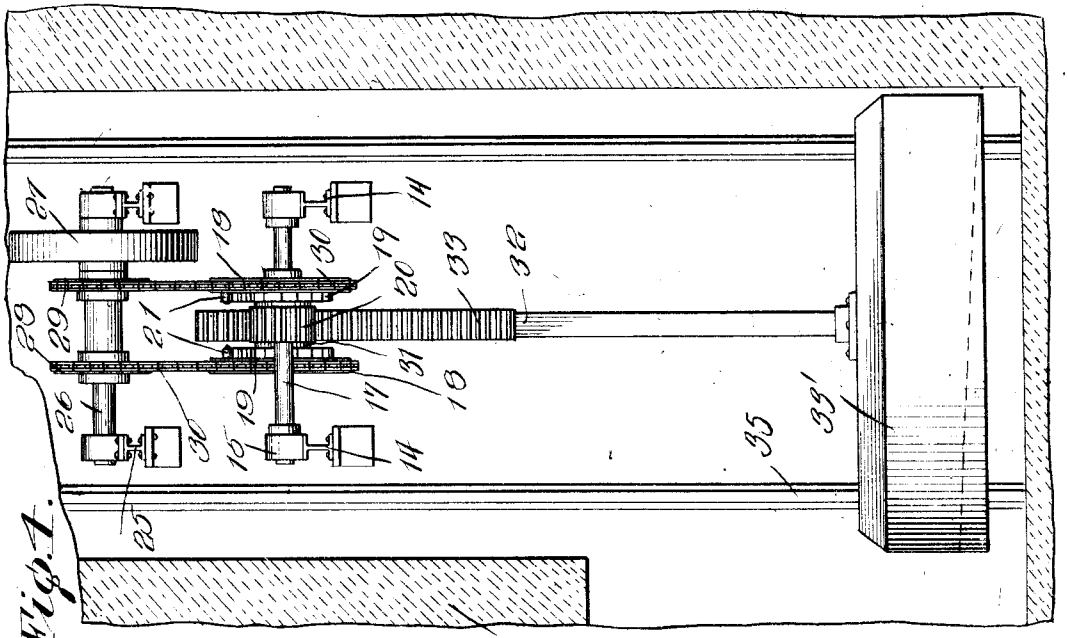

Fig. 4.

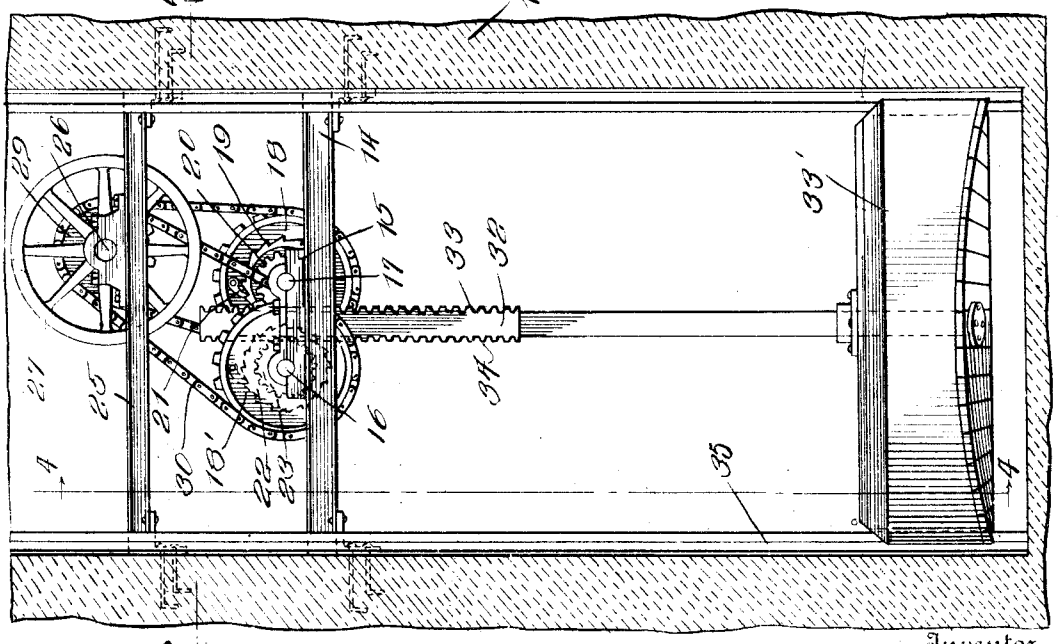

Fig. 1.

Inventor

C. E. Benson.

Witnesses

B. G. Braun

Harry M. Test

By Chandler & Chandler

Attorney

C. E. BENSON.

WAVE MOTOR.

APPLICATION FILED MAR. 21, 1912.

1,068,846.

Patented July 29, 1913.

2 SHEETS—SHEET 2.

Fig. 3.

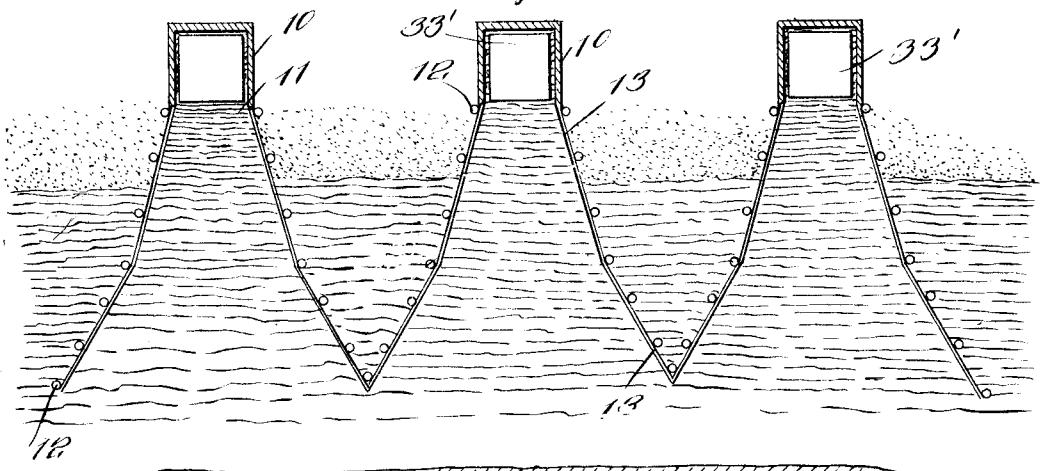

Fig. 2.

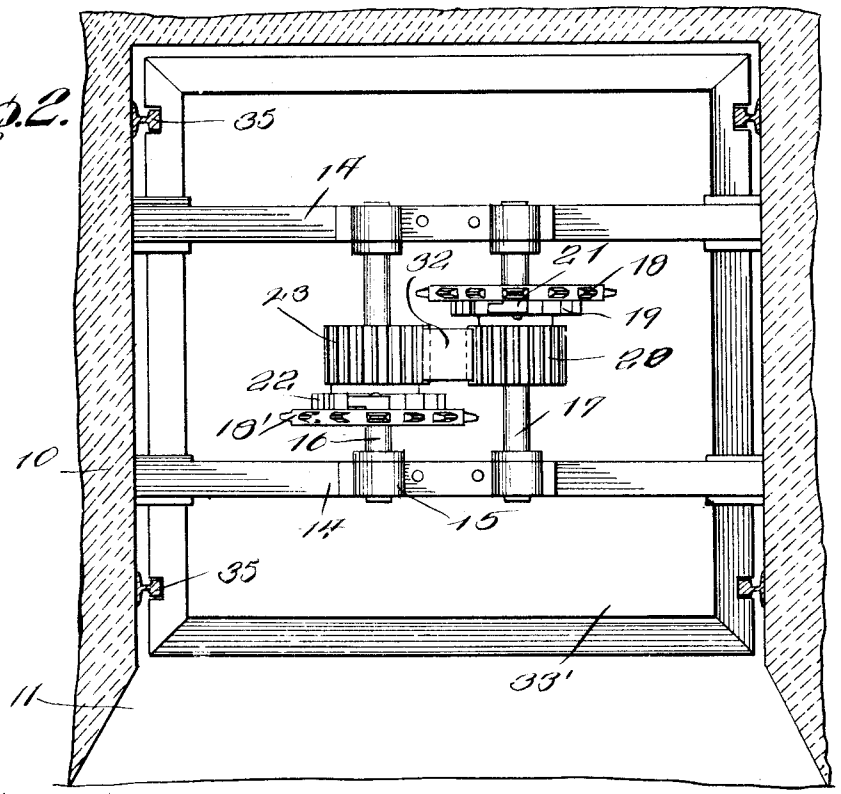

Inventor

Witnesses

B. G. Brann

Harry M. Test.

C. E. Benson.

By Chamalee & Chamalee

Attorney

UNITED STATES PATENT OFFICE.

CARL E. BENSON, OF SAN FRANCISCO, CALIFORNIA.

WAVE-MOTOR.

1,068,846. Specification of Letters Patent. Patented July 29, 1913.

Application filed March 21, 1912. Serial No. 685,220.

To all whom it may concern:

Be it known that I, CARL E. BENSON, a citizen of the United States, residing at San Francisco, in the county of San Francisco, State of California, have invented certain new and useful Improvements in Wave-Motors; and I do hereby declare the following to be a full, clear, and exact description of the invention, such as will enable others skilled in the art to which it appertains to make and use the same.

This invention relates to improvements in wave motors, and particularly to the type of non-pivoted floats.

The principal object of the invention is to provide an effective and simple construction whereby the greatest amount of wave power may be concentrated at certain points.

Other objects reside in the peculiar construction and arrangement of the various parts.

In the drawings: Figure 1 is an elevation of one of my wave motors, partly in section, Fig. 2 is a horizontal section on the line 2—2 of Fig. 1, Fig. 3, is a plan view, showing the position of my device with respect to the shore and the ocean, Fig. 4 is a vertical section on the line 4—4 of Fig. 1 looking in the direction of the arrow.

Referring particularly to the drawings, 10 represents a concrete structure which is built on the shore, extending down a distance into the ground as a foundation and extending a suitable distance up in the air in the form of a tower. This concrete structure is hollow and has one side 11 opened. This side being toward the ocean, and extending divergently outward from the said concrete structure of the series of piles 12, to which are secured material of any suitable description to form a breakwater guide 13 so that the waves will be guided to the open side 11 of the concrete structure and into the mechanism which will now be described.

Mounted transversely in the upper portion of the concrete structure are the supporting beams 14, carrying the bearing blocks 15 in which are journaled the transversely extended shafts 16 and 17. Keyed on these shafts are sprocket wheels 18 and 18′. Loosely mounted on the shaft 17 is a rotatable member including a ratchet portion 19, and a pinion portion 20. The ratchet portion bears against the sprocket wheel 18, and is adapted to be engaged by a spring pressed pawl 21 secured on the adjacent face of said sprocket. Mounted on the shaft 16 is a similar rotary member including a ratchet portion 22, and a pinion portion 23, the ratchet portion being adapted to be engaged by a spring pressed pawl mounted on the adjacent face of the sprocket wheel 18′. Mounted above the supporting beams 14 are similar beams 25, which support a power shaft 26, carrying on one end a fly wheel 27, and having the sprocket wheels 28 and 29, which receive power respectively from the sprocket wheels 18 and 18′ by means of the chains 30.

Vertically slidable in the guides 31 is a double rack bar 32, having the rack teeth 33 and 34 on its respective sides, the former of which meshes with the pinion portion 20 and the latter of which meshes with the pinion portion 23. Mounted on the lower end of the rack bar is a suitable hollow buoyant body 33′ which is adapted to be acted upon by the waves. Extending vertically on the sides of the concrete structure are the guide rails 35 on which the said buoyant body is adapted to slide vertically and be guided positively up and down the interior of the concrete structure. The buoyant body 33′ is transversely concaved on its under side of the forward portion, said concavity beginning at the front of the body 33′ and inclining downward toward the back of the body. This portion of the buoyant body is presented toward the ocean, and facilitates the entry of a wave therebeneath, so that the same may be easily raised. It will thus be seen that the waves will be guided between the wall 13 and concentrated at the bottom of a concrete structure, and raise the buoyant body 33′ which pushes the rack bar 32 upwardly. The teeth 33 will rotate the pinion portion 20 and cause the sprocket wheel 18 to rotate and communicate motion to the shaft 26. The ratchet wheel 22 will rotate idly under its pawl. Upon the receding of the waves the float or buoyant body 33′ will fall. The teeth on the opposite side of the rack bar will engage the pinion portion 23, which will rotate the sprocket wheel 18′ and continue the movement of the shaft 26, the pinion portion 20 sliding around the shaft easily so that the teeth of the ratchet portion 19 will slide under the pawl 31. Thus a continuous movement is imparted to the shaft 26 as the rack bar moves upwardly and downwardly. The buoyant

body 33′ possesses sufficient buoyancy to be raised by a wave and of sufficient weight to drop and rotate the shaft 16.

What is claimed is:

In a wave motor, a vertical hollow concrete structure, the side toward the waves being open, vertical wave concentrating guide walls diverging from the sides of the openings of the concaved structure, and extending outwardly into the waves, and a buoyant body mounted on the structure, the bottom of said buoyant body having a rearwardly extending transversely concaved recess, the upper wall of which inclines downwardly toward the rear of the said body.

In testimony whereof, I affix my signature, in presence of two witnesses.

CARL E. BENSON.

Witnesses:

JAMES R. BUNDESEN,

PERCY S. WIGHTMAN.