(19) Europäisches Patentamt
European Patent Office
Office européen des brevets

(11) EP 0 987 416 B1

(12) **EUROPEAN PATENT SPECIFICATION**

(45) Date of publication and mention of the grant of the patent:
03.03.2004 Bulletin 2004/10

(51) Int Cl.[7]: **F02B 75/22**, F02B 61/02

(21) Application number: **99117155.4**

(22) Date of filing: **31.08.1999**

(54) **V-type internal combustion engine for motorcycle**

Motorradbrennkraftmaschine in V-Bauart

Moteur à combustion interne à cylindres en V pour un motocycle

(84) Designated Contracting States:
DE ES FR IT

(30) Priority: **14.09.1998 JP 26006598**

(43) Date of publication of application:
22.03.2000 Bulletin 2000/12

(73) Proprietor: **Honda Giken Kogyo Kabushiki Kaisha**
Minato-ku, Tokyo (JP)

(72) Inventors:
- **Nomura, Akifumi**
  4-1, Chuo 1-chome, Wako-shi, Saitama (JP)
- **Kanbe, Takashi**
  4-1, Chuo 1-chome, Wako-shi, Saitama (JP)

(74) Representative: **Liska, Horst, Dr.-Ing. et al**
Weickmann & Weickmann
Patentanwälte
Postfach 86 08 20
81635 München (DE)

(56) References cited:
US-A- 4 497 293
US-A- 4 903 483
US-A- 4 960 081

Note: Within nine months from the publication of the mention of the grant of the European patent, any person may give notice to the European Patent Office of opposition to the European patent granted. Notice of opposition shall be filed in a written reasoned statement. It shall not be deemed to have been filed until the opposition fee has been paid. (Art. 99(1) European Patent Convention).

EP 0 987 416 B1

Description

[0001] The present invention relates to a motorcycle having a V-type internal combustion engine, and particularly to an improved V-type internal combustion engine in which a front bank and a rear bank are disposed fore and aft in such a manner as to cross each other in a V-shape centered at a crank shaft disposed laterally in a state that the crank shaft is mounted on a body frame, and a mission case body for containing a transmission is integrally provided on a rear portion of a crank case for containing the crank shaft.

Prior Art

[0002] The V-type internal combustion engine for a motorcycle of this type has been widely known as an engine for a motorcycle (for example, see Japanese Patent laid-open No. Hei-173832).

[0003] US 4 497 293 discloses a motorcycle in accordance with the preamble of claim 1. There, a lubricating oil pump is mounted below the crank shaft within the oil pan of the engine.

Problem to be Solved by the Invention

[0004] The prior art V-type internal combustion engine for a motorcycle, however, has a problem. Since a lubricating oil pump and a cooling water pump are disposed vertically in a rear portion of a crank case, the rear portion of the crank case must be extended longer rearwardly and also a mission case portion must be largely protruded rearwardly from the crank case in order to avoid the interference between the pumps and a transmission. This results in enlargement of the internal combustion engine, thereby making it difficult to ensure a desirable ground clearance of the internal combustion engine and to reduce the height of a driver's seat and pillion seat.

[0005] In view of the foregoing, the present invention has been made, and an object of the present invention is to provide a motorcycle with a V-type internal combustion engine, which is capable of compactly forming a rear portion of a crank case and a mission case portion without any interference with a lubricating oil pump and a cooling water pump, thereby ensuring a desirable ground clearance of the internal combustion engine and reducing the heights of a driver's seat and a pillion seat.

Means for solving the Problem

[0006] To achieve the above object, according to a first feature of the present invention, there is provided a motorcycle with a V-type internal combustion engine in accordance with claim 1.

[0007] In this motorcycle, a front bank and a rear bank of the engine are disposed fore and aft at an upper part of the crank case in such a manner as to cross each other in a V-shape centered at a crank shaft disposed laterally in a state that the crank shaft is mounted on a body frame, and a mission case portion for containing a transmission is integrally provided on a rear portion of said crank case for containing the crank shaft, characterized in that a lubricating oil pump for supplying oil to portions to be lubricated of the front and rear banks and a cooling water pump for supplying cooling water to water jackets of the front and rear banks are provided in the crank case in such a manner as to be laterally disposed in front of and over the crank shaft.

[0008] According to the first feature of the present invention, since the oil pump and the water pump are disposed in front of and over the crank shaft, it is possible to compactly form the rear portion of the crank case and the mission case portion continuous thereto without any interference with the oil pump and the water pump, and hence to ensure a desirable ground clearance of the internal combustion engine and easily reduce the heights of the driver's seat and the pillion seat. In this case, although the front portion of the crank case is slightly swelled by the effect of the above arrangement of the oil pump and the water pump, the swelled portion of the crank case is contained in a lower dead space of the front bank, and therefore, it does not obstruct the compactness of the internal combustion engine.

[0009] According to a second feature of the present invention, in addition to the first feature, the lubricating oil pump and the cooling water pump are coaxially disposed, and both ends of a single pump shaft usually driven by the crank shaft are connected to the pumps.

[0010] According to the second feature, the oil pump and the water pump can be usually driven by the crank shaft via the common transmission system, to thereby simplify the transmission system. Further, since the drive system of both the pumps disposed over the crank shaft is not required to be dipped in oil accumulated in the oil sump of the crank case, it is possible to eliminate the agitation of oil by the drive system and hence to reduce the power loss.

[0011] According to a third feature of the present invention, in addition to the first or second feature, a starting motor connected to the crank shaft via a starting transmission unit is mounted to the crank case in such a manner as to be disposed in front of and under the crank shaft.

[0012] According to the third feature, the starting motor disposed in front of and under the crank shaft also does not obstruct the compactness of the rear portion of the crank case and the mission case portion, and since the starting motor is contained in the lower dead space of the front bank, it does not obstruct the compactness of the internal combustion engine. Further, the starting transmission unit is dipped in oil accumulated in the oil sump on the bottom of the crank case by the effect of the above arrangement of the starting motor; however, since the starting transmission unit is activated not during operation of the engine but upon start-up of

the engine, it does not agitate the oil during operation of the engine and thereby does not cause the power loss.

[0013] According to a fourth feature of the present invention, in addition to the first or second feature, an oil filter is mounted in a filter chamber formed in the crank case in such a manner as to be positioned substantially directly over the crank shaft, and the filter chamber is partitioned by the oil filter into an inlet chamber connected to a discharge port of the lubricating oil pump and an outlet chamber connected to the portions to be lubricated of the front and rear banks.

[0014] According to the fourth feature, with the above-described arrangement and configuration of the oil pump, the filter chamber and the oil filter, it is possible to make the length of the oil passage as short as possible, and also to arrange the lubricating systems for the front and rear banks substantially symmetrically each other and hence to uniformly lubricate both the banks.

Mode for Carrying out the Invention

[0015] Hereinafter, an embodiment of the present invention will be described with reference to the accompanying drawings.

Brief Description of the Drawings

[0016] It is illustrated in:

Fig. 1
A side view of a motorcycle on which a V-type internal combustion engine of the present invention is mounted.

Fig. 2
A side view of the internal combustion engine shown in Fig. 1.

Fig. 3
An enlarged vertical sectional view taken on line 3-3 of Fig. 2.

Fig. 4
A sectional view taken on line 4-4 of Fig. 3.

Fig. 5
A sectional view taken on line 5-5 of Fig. 2.

Fig. 6
A system diagram showing the flow of cooling water in the internal combustion engine.

Fig. 7
A sectional view taken on line 7-7 of Fig. 2.

Fig. 8
An enlarged view showing front and rear timing transmission units shown in Fig. 3 and their neighborhoods.

Fig. 9
An enlarged view of a transmission shown in Fig. 3 and its neighborhood.

Fig. 10
A plan view showing an exhaust system of the internal combustion engine and its neighborhood.

Fig. 11
A plan view of a cylinder head of a rear bank of the internal combustion engine.

Fig. 12
A view seen along an arrow 12 of Fig. 9.

[0017] In the following description, the front, rear, right, and left sides are based on a body of the motorcycle.

Entire Configuration of Motorcycle (see Figs. 1 and 2)

[0018] A front fork (not shown in Figs. 1 and 2) for supporting a front wheel is steerably connected to the front end of a body frame 1 of a motorcycle M. A rear fork 3 for supporting a rear wheel 2 is vertically swingably connected to a rear portion of the body frame 1, and a rear cushion 7 is interposed between the rear ends of the rear fork 3 and the body frame 1.

[0019] A V-type internal combustion engine E having a front bank 4_1 and a rear band 4_2 is mounted on an intermediate portion of the body frame 1, and a fuel tank 5 is mounted on the intermediate portion of the body frame 1 at a position over the engine E. A main seat 6a and a pillion seat 6b are mounted on the rear portion of the body frame 1 in such a manner as to be continuous to the rear end of the fuel tank 5.

[0020] A chain transmission unit 10 for connecting an output shaft 97 of a transmission 8 connected to the internal combustion engine E and a hub of the rear wheel 2 is disposed on the left side of the rear wheel 2. A starting motor 11 is disposed in front of and under the crank shaft 15.

[0021] A front carburetor 12_1 connected to the front bank 4_1 and a rear carburetor 12_2 connected to the rear bank 4_2 are disposed in a valley portion 28 between the front bank 4_1 and the rear band 4_2 of the internal combustion engine E. A front exhaust pipe 13_1 connected to a front surface portion of the front bank 4_1 and a rear exhaust pipe 13_2 connected to a rear portion of the rear bank 4_2 are collectively connected to the front end of a common exhaust muffler 14. The exhaust muffler 14 is disposed opposite to the chain transmission unit 10 with respect to the rear wheel 2, that is, on the right side of the rear wheel 2.

Entire Configuration of Internal Combustion Engine (see Figs. 2, 3, 5 and 8)

[0022] The front bank 4_1 and the rear bank 4_2 of the internal combustion engine E are disposed fore and aft in such a manner as to cross each other at 90° centered at a crank shaft 15 extending from right to left. The crank shaft 15 has a single crank portion 16 having a crank pin 16a, and a pair of right and left journals 18 and 17 adjacent to both the ends of the crank shaft 15. The journals 18 and 17 are supported by a crank case 21 via

ball bearings 20 and 19, respectively.

[0023] The front bank 4_1 and the rear bank 4_2 include cylinder blocks 22_1 and 22_2 connected to the front and rear sloping surfaces of a cone-shaped upper portion of the crank case 21 supporting the crank shaft 15, and cylinder heads 23_1 and 23_2 connected to upper ends of the cylinder blocks 22_1 and 22_2, respectively. Water jackets 24_1 and 24_2, which are continuous to each other, are formed in the cylinder blocks 22_1 and 22_2 and cylinder heads 23_1 and 23_2, respectively.

[0024] Pistons 26_1 and 26_2 inserted in cylinder bores 25_1 and 25_2 of the cylinder blocks 22_1 and 22_2 are connected to the crank pin 16a via connecting rods 27_1 and 27_2, respectively. In this case, the connecting rod 27_2 of the rear bank 4_2 is connected to the crank pin 16a in such a manner as to be offset leftwardly from the connecting rod 27_1 of the front bank 4_1. The axial line of the rear bank 4_2 is offset leftwardly from that of the front bank 4_1 in accordance with a lateral offset S, as shown in Fig. 8, between the connecting rods 27_1 and 27_2.

[0025] As shown in Fig. 5, an over-running clutch 53 of a starting transmission unit 94, and a drive gear 54a of a first transmission unit 54 connected to a clutch 100 are mounted to a right end portion, projecting outwardly from the right journal 18, of the crank shaft 15 in such a manner as to be adjacently positioned in this order from the inside of the right end portion of the crank shaft 15. Specifically, an outer member of the over-running clutch 53 is spline-connected to the crank shaft 15, and a starting gear 52 is fixed to an inner member of the over-running clutch 53. The drive gear 54a is key-connected to the crank shaft 15.

[0026] As shown in Fig. 8, a drive timing sprocket 42_1 of a front timing transmission unit 46_1 for driving a valve system cam shaft 41_1 of the front bank 4_1, a drive timing sprocket 42_2 of a rear timing transmission unit 46_2 for driving a valve system cam shaft 41_2 of the rear bank 4_2, and a rotor 31 of a generator 30 are mounted on a left end portion, projecting outwardly from the left journal 17, of the crank shaft 15 in such a manner as to be adjacently positioned in this order from the inside of the left end portion of the crank shaft 15. Specifically, the rotor 31 is key-connected to the crank shaft 15. The mounting structure of the two drive timing sprockets 42_1 and 42_2 will be described later.

[0027] A stator 32 of the generator 30, which is surrounded by the rotor 31, is fixed to a left cover 33 connected to the left end surface of the crank case 21.

[0028] A projection 35 is formed at a portion on the outer peripheral surface of the rotor 31. A crank position sensor 36 for detecting a rotational position of the crank shaft 15 in cooperation with the projection 35 is fixed to the left end surface of the crank case 21. An output signal sent from the crank position sensor 36 is used as a control signal for an ignitor or an input signal for a tachometer.

[0029] At the right end portion, opposed to the generator 30, of the crank shaft 15, the starting gear 52 is supported thereon via the over-running clutch 53 in such a manner as to be adjacent to the right journal 18, and the first drive gear 54a is key-connected thereto in such a manner as to be adjacent to the starting gear 52.

[0030] With this configuration, the front and rear timing transmission units 46_1 and 46_2 can be collectively assembled on the same side, that is, on the left end portion side of the crank shaft 15, to thereby improve the assembling performance thereof, and also the maintenance of both the timing transmission units 46_1 and 46_2 can be easily performed without any interference with other parts only by removing the generator 30 positioned outside both the timing transmission units 46_1 and 46_2 from the crank shaft 15. Further, since the generator 30 is disposed adjacent to both the timing transmission units 46_1 and 46_2, oil scattered from both the timing transmission units 46_1 and 46_2 are splashed to the generator 30 during operation of the engine, it is possible to effectively cool the generator 30.

[0031] Further, according to the above configuration, the front and rear timing transmission units 46_1 and 46_2 and the generator 30 are disposed on the left side portion of the crank case 21 while a starting transmission unit 94, the first transmission unit 54, and the clutch 100 are disposed on the other side of the crank case 21, so that good balance in weight is maintained between both sides of the crank case 21 and accordingly, when the internal combustion engine is mounted on the body frame 1, it is possible to easily offer good balance in weight between the right and left sides of the motorcycle M.

Valve System (see Figs. 2, 3, 4, 8, and 9)

[0032] Intake valves 37_1 and 37_2 and exhaust valves 38_1 and 38_2 are respectively provided in the cylinder heads 23_1 and 23_2 of the front and rear banks 4_1 and 4_2 in such a manner that the intake valves 37_1 and 37_2 are offset to the valley 28 side between the front and rear banks 4_1 and 4_2. Both ends of cam shafts 41_1 and 41_2 extending in parallel to the crank shaft 15 are supported by the cylinder heads 23_1 and 23_2 via ball bearings 50 and 50', respectively. The cam shaft 41_1 is adapted to open/close the intake valve 37_1 and the exhaust valve 38_1 via rocker arms 39_1 and 40_1, respectively, and the cam shaft 41_2 is adapted to open/close the intake valve 37_2 and the exhaust valve 38_2 via rocker arms 39_2 and 40_2, respectively. Timing chains 44_1 and 44_2 are wound around the drive timing sprockets 42_1 and 42_2 fixed to the left end portion of the crank shaft 15 and driven timing sprockets 43_1 and 43_2 fixed to the left ends of the cam shafts 41_1 and 41_2 of the front and rear banks 4_1 and 4_2, respectively. Both the drive timing sprockets 42_1 and 42_2 has a common boss 45 press-fitted around a portion, adjacent to the outer end of the left journal 17, of the crank shaft 15.

[0033] The drive timing sprockets 42_1, the timing chain 44_1 and the driven timing sprocket 43_1 of the front

bank 4_1 constitute the front timing transmission unit 46_1 for reducing the rotational speed of the crank shaft 15 to half and transmitting the reduced rotational speed to the corresponding cam shaft 41_1. The front timing transmission unit 46, is disposed in a front timing transmission chamber 47_1 formed in a side wall, on the generator 30 side, of the front bank 4_1. The drive timing sprockets 42_2, the timing chain 44_2 and the driven timing sprocket 43_2 of the rear bank 4_2 constitute the rear timing transmission unit 46_2 for reducing the rotational speed of the crank shaft 15 to half and transmitting the reduced rotational speed to the corresponding cam shaft 41_2. The rear timing transmission unit 46_2 is disposed in a rear timing transmission chamber 47_2 formed in a side wall, on the generator 30 side, of the rear bank 4_2.

[0034] The rear timing transmission unit 46_2 is disposed outside the front timing transmission unit 46_1 in the axial direction, that is, it is located closer to the generator 30 than the front timing transmission unit 46_1 is.

[0035] The crank shaft 15 is rotated counterclockwise as shown by an arrow R in Fig. 4, and accordingly, the rear sides of the timing chains 44_1 and 44_2 are loosened. To give specific tensions to the loosened rear sides of the timing chains 44_1 and 44_2, arched chain tensioners 48_1 and 48_2 swingably supported by the crank case 21 are brought into slide-contact with the loosened rear sides of the timing chains 44_1 and 44_2. Further, known tensioner lifters 49_1 and 49_2 for pressing central portions of the chain tensioners 48_1 and 48_2 in the longitudinal direction toward the timing chains 44_1 and 44_2 at specific loads are mounted on mounting planes formed on rear surfaces of the cylinder blocks 22_1 and 22_2 of the front and rear banks 4_1 and 4_2 with bolts 109, respectively.

[0036] The crank case 21 is divided at the central portion in the lateral direction into a right case half 21b and a left case half 21a. Outer races of the ball bearings 20 and 19 are previously lightly press-fitted in the right and left case halves 21b and 21a, respectively, and upon assembly of both the case halves 21b and 21a, the right and left journals 18 and 17 of the crank shaft 15 are lightly press-fitted in inner races of the ball bearings 20 and 19, respectively. Here, in order to allow the drive timing sprockets 42_1 and 42_2 whose common boss 45 is press-fitted around the crank shaft 15 at the position adjacent to the outer side of the left journal 17 to pass through the inner race of the left ball bearing 19, an outside diameter d_1 of each of the drive timing sprockets 42_1 and 42_2 is set to be slightly smaller than an inside diameter d_2 of the inner race of the ball bearing 19. As a result, it is possible to easily press-fit the common boss 45 of both the drive timing sprockets 42_1 and 42_2 around the crank shaft 15 as a single part. Further, since the ball bearings 20 and 19 are lightly press-fitted in the right and left case halves 21b and 21a and the right and left crank journals 18 and 17, it is possible to suppress occurrence of vibration of the ball bearings 20 and 19 and hence reduce occurrence of noise during operation of the engine.

Exhaust System (see Figs. 2, 10 and 11)

[0037] The exit of an exhaust port 51_1 of the front bank 4_1 is opened to the front of the cylinder head 23_1 of the front bank 4_1, and the upstream end of the front exhaust pipe 13_1 is connected to the exit of the exhaust port 51_1. The exit of an exhaust port 51_2 of the rear bank 4_2 is opened to a right side surface, opposed to the rear timing transmission unit 46_2, of the rear portion of the cylinder head 23_2 of the rear bank 4_2, and the upstream end of the rear exhaust pipe 13_2 is connected to the exit of the exhaust port 51_2.

[0038] The front and rear exhaust pipe 13_1 and 13_2 arranged on the upper and lower sides extend on the right side, opposed to the front and rear chain transmission units 46_1 and 46_2, of the internal combustion engine E, and the downstream ends of the front and rear exhaust pipe 13_1 and 13_2 are collected and connected to the exhaust muffler 14 disposed on the right side of the rear wheel 2.

[0039] With this configuration, since the front and rear timing transmission units 46_1 and 46_2 are collectively disposed on one side, to which the rear bank 4_2 is offset from the front bank 4_1, of the internal combustion engine E, and the front and rear exhaust pipes 13_1 and 13_2 arranged on the upper and lower sides are collectively located on the other side of the internal combustion engine E, it is possible to make the entire width of the internal combustion engine E including both the exhaust pipes 13_1 and 13_2 as narrow as possible while easily preventing interference between both the timing transmission units 46_1 and 46_2 and both the exhaust pipes 13_1 and 13_2.

[0040] Further, according to the above configuration, since the rear exhaust pipe 13_2 disposed on the right side of the motorcycle M is connected to the exhaust port 51_2 opened to the right side surface of the rear portion of the cylinder head 23_2 of the rear bank 4_2, the degree of bending of the rear exhaust pipe 13_2 is reduced, so that it may make small the flow resistance of the pipe and hence to improve the output performance.

Transmission System (see Figs. 2, 3 and 9)

[0041] A mission case portion 95 protruded from a lower portion of the rear bank 4_2 is formed integrally with the crank case 21. An input shaft 96 and an output shaft 97 of the transmission 8, which are provided directly behind the crank shaft 15 in such a manner as to be located on the front and rear sides in parallel to the crank shaft 15, are contained in the mission case portion 95. Both ends of the input shaft 96 are supported by right and left walls of the mission case portion 95 via a pair of ball bearings 98' and 98, and both ends of the output shaft 97 are supported by the right and left walls of the mission case portion 95 via a pair of ball bearings 99' and 99.

An inner member 101 of the clutch 100 covered with the right cover 34 connected to the right side surface of the crank case 21 is spline-connected to the right end portion of the input portion 96. A first driven gear 54b, which is meshed with the first drive gear 54a to constitute the first transmission unit 54, is mounted to the inner end of the outer member 102. A plurality (five in the example shown in the figures) of speed change gear trains G_1 to G_5 are selectively arranged between the input shaft 96 and the output shaft 97.

[0042] As shown in Fig. 9, a left wall 95a, which supports the left end portions of the input shaft 96 and the output shaft 97, of the mission case portion 95 is offset rightwardly from the timing transmission unit 46_2 of the rear bank 4_2. Accordingly, when the tensioner lifter 49_2 of the timing transmission unit 46_2 of the rear bank 4_2 is mounted on the rear surface of the cylinder block 22_2 of the rear bank 4_2, it is possible to prevent the tensioner lifter 49_2 from interfering with the mission case portion 95.

[0043] In particular, since the timing transmission unit 46_2 of the rear bank 4_2 is disposed outwardly, that is, leftwardly from the timing transmission unit 46_1 of the front bank 4_1, it is possible to minimize the rightward offset of the mission case portion 95 from the crank case 21, and hence to realize the compactness of the internal combustion engine E.

Vehicular Speed Sensor (see Figs. 2, 9 and 12)

[0044] The rear wall of the mission case portion 95 has a mounting hole 103, and a vehicular speed sensor 105 having a detecting portion 105a inserted in the mission case portion 95 through the mounting hole 103 is fixed on the rear wall of the mission case portion 95 with a bolt 110. The vehicular speed sensor 105 is disposed with the detecting portion 105a facing to the tips of a top driven gear, that is, a driven gear 104 of the top gear train G_5.

[0045] The top driven gear 104, which is spline-connected to the output shaft 97, serves as a shift gear for working the second-speed gear train G_2 by leftward shift thereof. In this embodiment, even when the top driven gear 104 is shifted leftwardly, the outer periphery of the top driven gear 104 is not deviated from the detecting region of the vehicular speed sensor 105. The vehicular speed sensor 105 creates a signal corresponding to the number of teeth of the top driven gear 104 just crossing the detecting portion of the vehicular speed sensor 105 and outputs the signal to a computer (not shown). The computer calculates a vehicular speed on the basis of the signal thus inputted from the vehicular speed sensor 105 and displays the vehicular speed on a speed meter (not shown) on an instrument panel (not shown) of the motorcycle M.

[0046] In this way, the vehicular speed sensor 105 for detecting the rotational speed of the top driven gear 104 usually rotated together with the output shaft 97 can be mounted on the rear wall of the mission case portion 95 without any interference with not only the rear bank 4_2 tilted rearwardly toward the mission case portion 95 side but also the rear exhaust pipe 13_2 mounted on the rear portion of the rear bank 4_2.

[0047] A rib 106 for covering the lower surface of the vehicular speed sensor 105 is integrally formed on the rear surface of the mission case portion 95. The central portion of the rib 106 has a through-hole 107 allowing a lead wire 108 of the vehicular speed sensor 105 to pass therethrough.

[0048] As shown in Fig. 2, a pair of right and left hangers 112_1 and a pair of right and left hangers 112_2 are integrally formed on the upper and lower sides of the rear surface of the mission case portion 95 in such a manner as to project therefrom, and a pair of right and left hangers 112_3 are integrally formed on the front surface of the crank case 21 in such a manner as to project therefrom. When the internal combustion engine E is mounted on the body frame 1, these hangers 112_1, 112_2, and 112_3 are connected to the body frame 1. Then, the vehicular speed sensor 105 is disposed in a rear dead space of the interior of the mission case portion 95 surrounded by the rear side two pairs of the hangers 112_1 and 112_2. With this configuration, it is possible to enhance the space efficiency.

[0049] The above rib 106 functions to protect the vehicular speed sensor 105 from being affected by small stones and sands flying from a road during running of the motorcycle M. The through-hole 107 for allowing the lead wire 108 to pass therethrough functions as a port for discharging rainwater and cleaning water permeated in the rib 106.

Lubricating and Cooling System (see Figs. 2, 3, 5 and 6)

[0050] As shown in Figs. 2, 3 and 5, the first drive gear 54a key-connected to the right end portion of the crank shaft 15 is meshed at its two different portions in the peripheral direction with a pump drive gear 56 and the first driven gear 54b.

[0051] The pump drive gear 56 is key-connected to a pump shaft 61 which is supported via a bearing 86 by the right cover 34 connected to the right end surface of the crank case 21. The pump shaft 61, which is in parallel to the crank shaft 15, is disposed in front of and over the crank shaft 15.

[0052] An inner rotor 58 of a trochoid type oil pump 57 for lubrication is fixed on the inner end of the pump shaft 61, and an impeller 63 of a water pump 62 for cooling is fixed on the outer end of the pump shaft 61. A pump housing 60 for containing an outer rotor 59 of the oil pump 57 is screwed in a partition wall 65 for supporting the ball bearing 20 of the crank case 21. A pump casing 64 for containing the impeller 63 is fixed on the outer surface of the right cover with a bolt 87. In this way, the oil pump 57 and the water pump 62 are coaxially disposed in front of and over the crank shaft 15. The oil

pump 57 is provided on the crank case 21 in such a manner as to be adjacent to the outer side of the over-running clutch 53 in the radial direction.

[0053] A suction port of the oil pump 57 is connected via a suction pipe 68 to a strainer 67 (see Fig. 2) disposed in an oil sump 66 on the inner bottom of the crank case 21, and a discharge port of the oil pump 57 is communicated via an oil passage 69 to the crank shaft 15, the cam shafts 41_1 and 41_2 of the front and rear banks 4_1 and 4_2, and other portions to be lubricated.

[0054] An oil filter 70 positioned substantially directly over the crank shaft 15 is interposed in the course of the oil passage 69. The oil filter 70 is mounted to a filter chamber 71 formed in the right cover 34, and a cap 72 for closing an opening of the chamber 71 is fixed to the right cover 34. An inlet chamber 71a on the outer peripheral side of the oil filter 70 in the filter chamber 71 is communicated to the discharge port of the oil pump 57 via an upstream portion 69a of the oil passage 69 formed in the crank case 21, and an outlet chamber 71b on the inner peripheral side of the oil filter 70 in the filter chamber 71 is communicated to two branch oil passages 69b and 69c, formed in the cap 72, of the oil passage 69. One branch oil passage 69b is communicated to a portion 73 to be lubricated of the crank shaft 15 system. The other branch oil passage 69c is further branched at a connection surface between the crank case 21 and the right cover 34 into front and rear branch oil passages 69d and 69e which are in turn communicated to portions 74_1 and 74_2 to be lubricated of the valve systems including the cam shafts 41_1 and 41_2 of the front and rear banks 4_1 and 4_2.

[0055] When the oil pump 57 is driven by the rotation of the crank shaft 15 via the pump drive gear 56 and the pump shaft 61, oil accumulated in the oil sump 66 is sucked from the strainer 67 and is press-fed to the filter chamber 71. The oil is filtered in the oil filter 70 and is then supplied to the portion 73 to be lubricated of the crank shaft 15 system and the portions 74_1 and 74_2 to be lubricated of the valve systems of the front and rear banks 4_1 and 4_2, to thus lubricate these portions 73, 74_1 and 74_2. Further, with the above-described arrangement and configuration of the oil pump 57, the filter chamber 71, the oil filter 70 and the oil passage 69, it is possible to make the length of the oil passage 69 as short as possible, and also to arrange the lubricating systems for the front and rear banks 4_1 and 4_2 substantially symmetrically each other and hence to uniformly lubricate both the banks 4_1 and 4_2.

[0056] The oil filter 70 is provided with a relief valve 70b for short-circuiting the inlet chamber 71a to the outlet chamber 71b when a filter element 70a of the oil filter 70 becomes blocked.

[0057] In the water pump 62, as shown in Fig. 6, a suction pipe 75 is connected to an outlet of the radiator 29 (disposed in front of the internal combustion engine E as shown in Fig. 1) via a water pipe 77_1, and a discharge pipe 76 is connected to a lower portion of the water jacket 24_1 of the front bank 4_1 via a water pipe 77_2.

[0058] As described above, the front and rear banks 4_1 and 4_2 include the cylinder blocks 22_1 and 22_2, the cylinder heads 23_1 and 23_2, and the water jacket 24_1 and 24_2 continuous to each other, respectively, and a combined chamber 80 opened to the front surface of the cylinder head 23_2 of the rear bank 4_2 is formed in the cylinder head 23_2 and an upper portion of the water jacket 24_2 is communicated to the combined chamber 80.

[0059] Lower joints 78_1 and 78_2 communicated to lower portions of the corresponding water jackets 24_1 and 24_2 are integrally formed on the opposed surfaces of the front and rear banks 4_1 and 4_2 in such a manner as to project therefrom. Both ends of a lower communication water pipe 77_3 disposed in the valley portion 28 are connected to these joints 78_1 and 78_2.

[0060] An upper joint 79_1 communicated to an upper portion of the jacket 23_1 is integrally formed on the rear surface of the front bank 4_1, and a flange of an upper joint 79_2 communicated to the combined chamber 80 is screwed in a lower surface portion of the cylinder head 23_2 of the rear bank 4_2. Both ends of a rear communication water pipe 77_4 disposed in the valley portion 28 are connected to these upper joints 79_1 and 79_2.

[0061] A thermostat 82 is disposed in the combined chamber 80, and a thermostat cover 81 for holding the thermostat 82 and covering the opening of the combined chamber 80 is connected to the front surface of the cylinder head 23_2.

[0062] An outlet joint 83 connected to the outlet of the thermostat 82 is integrally formed on the thermostat cover 81. The outlet joint 83 is connected to the inlet of the radiator 29 via a water pipe 77_5.

[0063] A bypass outlet joint 84 communicated to the combined chamber 80 via a communication passage 84' is integrally formed on the upper joint 79_2. The bypass outlet joint 84 is communicated to a heating chamber of the carburetor 12_2 of the rear bank 4_2, a heating chamber of the carburetor 12_1 of the front bank 4_1, and the suction pipe 75 in sequence by way of a bypass water pipe 85. The bypass outlet joint 84 has an inside diameter sufficiently smaller than that of the outlet joint 83 of the thermostat cover 81.

[0064] When the temperature of water in the combined chamber 80 becomes equal to or less than a specific temperature, the thermostat 82 blocks the combined chamber 80 from the thermostat cover 81 and opens the communication passage 84' between the combined chamber 80 and the bypass outlet joint 84. On the other hand, when the temperature of water in the combined chamber 80 becomes more than the specific temperature, the thermostat 82 communicates the combined chamber 80 to the thermostat cover 81 and closes the communication passage 84'.

[0065] As described, when the water pump 62 is driven by the rotation of the crank shaft 15 via the pump drive gear 56 and the pump shaft 61, if the temperature of water in the combined chamber 80 is relatively low,

the thermostat 82 blocks the combined chamber 80 from the thermostat cover 81 and opens the communication passage 84'. Consequently, cooling water is fed first from the discharge pipe 76 to the water jacket 24_1 of the front bank 4_1 by the water pump 62. Here, about a half of the cooling water is immediately fed to the water jacket 24_2 of the rear bank 4_2 by way of the lower communication water pipe 77_3, and the remaining cooling water passes through the water jacket 24_1 of the front bank 4_1 and is then fed to the combined chamber.80 of the rear bank 4_2 by way of the upper communication water pipe 77_4. In the combined chamber 80, the cooling water is combined with the above cooling water having passed through the water jacket 24_2 of the rear bank 4_2. The cooling water thus combined is fed from the combined chamber 80 to the bypass outlet joint 84 by way of the communication passage 84', being further fed from the bypass outlet joint 84 to the heating chambers of the carburetors 12_2 and 12_1 of the rear and front banks 4_2 and 4_1 in sequence; and is returned to the suction pipe 75 of the water pump 62. Thereafter, the same circulation is repeated. Such circulation of cooling water not by way of the radiator 29 makes it possible to promote the warming of the internal combustion engine E, and to heat the carburetors 12_1 and 12_2 thereby preventing icing of a fuel nozzle and its neighborhood.

[0066] With advance of the warming of the internal combustion engine E, the temperature of the cooling water whose components having passed through the water jackets 24_1 and 24_2 of the front and rear banks 4_1 and 4_2 and combined in the combined chamber 80 becomes the above specific temperature. At this time, since the thermostat 82 communicates the combined chamber 80 to the thermostat cover 81 and closes the communication passage 84', the above cooling water flows on the outlet joint 83 side, and is returned to the suction pipe 75 of the water pump 62 by way of the radiator 29. Thereafter, the same circulation is repeated. Accordingly, the front and rear banks 4_1 and 4_2 can be effectively cooled with the cooling water cooled by the radiation action of the radiator 29.

[0067] Since the lower and upper communication water pipes 77_3 and 77_4 are sufficient to be relatively short in length and are disposed in the valley portion 28 between both the banks 4_1 and 4_2, they are hidden by both the banks 4_1 and 4_2. The water pipes 77_3 and 77_4, therefore, are inconspicuous as seen from the outside, that is, do not degrade the appearance of the internal combustion engine E.

[0068] Since the thermostat 82 is disposed in the combined chamber 80 in which components of cooling water having cooled the front and rear banks 4_1 and 4_2 are combined, it can suitably control the water temperature in both the banks 4_1 and 4_2 by certainly detecting an average water temperature in both the banks 4_1 and 4_2. Further, it is not required to make a layout of piping for the thermostat 82, thereby simplifying the entire piping layout.

[0069] Since the thermostat cover 81 including the outlet joint 83 projecting forwardly is connected to the front surface of the upper portion of the rear bank 4_2, it is possible to reduce the degree of bending of the water pipe 77_5 for communicating the outlet joint 83 to the inlet of the radiator 29, and hence to make small the flow resistance of the water pipe 77_5 and also improve the entire appearance of the internal combustion engine E.

[0070] Since the bypass outlet joint 84 having the inside diameter smaller than that of the upper joint 79_2 of the rear bank 4_2 and being communicated to the combined chamber 80 is integrally formed on the upper joint 79_2, it is possible to collectively mount the upper joint 79_2 and the bypass outlet joint 84 to the rear bank 4_2, and hence to simplify the piping works.

[0071] Since the oil pump 57 and the water pump 62 are coaxially disposed and are driven by the common pump shaft 61 driven by the first drive gear 54a, it is possible to simplify the drive system thereof.

[0072] Since the oil pump 57 is disposed adjacent to the over-running clutch 53 in the radial direction, it is possible to suppress the increase in lateral width of the internal combustion engine E, although the oil pump 57 and the water pump 62 are coaxially disposed.

[0073] Since the oil pump 57 and the water pump 62 are disposed in front of and over the crank shaft 15, it is possible to compactly form the rear portion of the crank case 21 and the mission case portion 95 continuous thereto without any interference with the oil pump 57 and the water pump 62, and hence to ensure a desirable ground clearance of the internal combustion engine E and easily reduce the heights of the driver's seat 6a and the pillion seat 6b. In this case, although the front portion of the crank case 21 is slightly swelled by the effect of the above arrangement of the oil pump 57 and the water pump 62, the swelled portion of the crank case 21 is contained in the lower dead space of the front bank 4_1, and therefore, it does not obstruct the compactness of the internal combustion engine E.

[0074] Since the drive system of both the pumps 57 and 62 disposed over the crank shaft 15 is not required to be dipped in oil accumulated in the oil sump 66, it is possible to eliminate the agitation of oil by the drive system and hence to reduce the power loss.

[0075] Since the input shaft 96 and the output shaft 97 of the transmission 8 are horizontally disposed directly after the crank shaft 15 without any interference with the oil pump 57 and the water pump 62, it is possible to achieve the compactness of the mission case portion 95 and also flatten the upper wall of the mission case portion 95. This makes it possible to sufficiently ensure the distance between the mission case portion 95 and the rear exhaust pipe 13_2 and hence to easily prevent the mission case portion 95 and the transmission 8 contained therein from being thermally affected by the rear exhaust pipe 13_2.

Starting System (Figs. 2 and 7)

[0076] A containing recessed portion 88 is formed in the bottom surface of the front portion of the crank case 21, and the starting motor 11 is disposed in the containing recessed portion 88 with its axial line directed in parallel to the crank shaft 15. A casing 89 of the starting motor 11 is mounted on the crank case 21 in such a manner that a cylindrical supporting portion 89a at one end of the casing 89 is liquid-tightly fitted in a through-hole 90 formed in the end wall of the containing recessed portion 88 and a mounting arm portion 89b at the other end of the casing 89 is fastened to the crank case 21 with a bolt 111. The leading end of a rotor shaft 91 of the starting motor 11 is inserted in the crank case 21, and a pinion 92 formed on the leading end of the rotor shaft 91 is adapted to drive the starting gear 52 via a reduction gear train 93. The starting gear 52, the over-running clutch 53, and the reduction gear train 93 constitute a starting transmission unit 94 for transmitting the rotational power of the starting motor 11 to the crank shaft 15.

[0077] As described above, since the starting motor 11 is disposed in front of and under the crank shaft 15, the starting motor 11 also does not obstruct the compactness of the rear portion of the crank case 21 and the mission case portion 95, and since the starting motor 11 is contained in the lower dead space of the front bank 4_1, it does not obstruct the compactness of the internal combustion engine E. Further, the reduction gear train 93 is dipped in oil accumulated in the oil sump 66 on the bottom of the crank case 21 by the effect of the above arrangement of the starting motor 11; however, since the reduction gear train 93 is activated not during operation of the engine but upon start-up of the engine, it does not agitate the oil during operation of the engine and thereby does not cause the power loss.

[0078] The present invention is not limited to the above embodiments, and it is to be understood that various changes in design may be made without departing from the scope of the present invention.

[0079] Object: To provide a V-type internal combustion engine for a motorcycle, having a front bank and a rear bank, which is capable of compactly forming a rear portion of a crank case and a mission case portion continuous thereto without any interference with a lubricating oil pump and a cooling water pump.

[0080] Solving Means: A lubricating oil pump 57 for supplying oil to portions to be lubricated of a front bank 4_1 and a rear bank 4_2, and a cooling water pump 62 for supplying cooling water to water jackets 24_1 and 24_2 of the front and rear banks 4_1 and 4_2 are provided in a crank case 21 in such a manner as to be laterally disposed in front of and over a crank shaft 15.

(Fig. 2)

Claims

1. Motorcycle having a V-type internal combustion engine in which a front bank (4,) and a rear bank (4_2) are disposed fore and aft at an upper part of a crank case (21) in such a manner as to cross each other in a V-shape centered at a crank shaft (15) disposed laterally in a state that the crank shaft (15) is mounted on a body frame (1), and a transmission case portion (95) for containing a transmission (8) is integrally provided on a rear portion of said crank case (21) for containing said crank shaft (15), **characterized in that**
a lubricating oil pump (57) for supplying oil to portions to be lubricated of said front and rear banks (4_1, 4_2) and a cooling water pump (62) for supplying cooling water to water jackets (24_1, 24_2) of said front and rear banks (4_1, 4_2) are provided in said crank case (21) in such a manner as to be laterally disposed in front of and over said crank shaft (15).

2. A motorcycle according to claim 1, wherein said lubricating oil pump (57) and said cooling water pump (62) are coaxially disposed, and both ends of a single pump shaft (61) usually driven by said crank shaft (15) are connected to said pumps (57, 62).

3. A motorcycle according to claim 1 or 2, wherein a starting motor (11) connected to said crank shaft (15) via a starting transmission unit (94) is mounted to said crank case (21) in such a manner as to be disposed in front of and under said crank shaft (15).

4. A motorcycle according to claim 1 or 2, wherein an oil filter (70) is mounted in a filter chamber (71) formed in said crank case (21) in such a manner as to be positioned substantially directly over said crank shaft (15), and said filter chamber (71) is partitioned by said oil filter (70) into an inlet chamber (71 a) connected to a discharge port of said lubricating oil pump (57) and an outlet chamber (71b) connected to said portions to be lubricated of said front and rear banks (4_1, 4_2).

Patentansprüche

1. Kraftrad mit einem Verbrennungsmotor vom V-Typ, worin eine vordere Bank (4_1) und eine hintere Bank (4_2) vorne und hinten an einem oberen Teil eines Kurbelgehäuses (21) derart angeordnet sind, dass sie einander in einer V-Form kreuzen, die an einer Kurbelwelle (15) zentriert ist, die im anbrachten Zustand der Kurbelwelle (15) an einem Hauptrahmen (1) seitlich angeordnet ist, und ein Getriebegehäuseabschnitt (95) zur Aufnahme eines Getriebes (8) integral an einem hinteren Abschnitt des Kurbelgehäuses (21) zur Aufnahme der Kurbelwelle (15) vor-

gesehen ist, **dadurch gekennzeichnet, dass** eine Schmierölpumpe (57) zur Ölversorgung von zu schmierenden Teilen der vorderen und/oder hinteren Bank (4_1, 4_2) sowie eine Kühlwasserpumpe (62) zur Kühlwasserversorgung von Wassermänteln (24_1, 23_2) der vorderen und der hinteren Bank (4_1, 4_2) in dem Kurbelgehäuse (21) derart vorgesehen sind, dass sie seitlich vor und über der Kurbelwelle (15) angeordnet sind.

2. Kraftrad nach Anspruch 1, worin die Schmierölpumpe (57) und die Kühlwasserpumpe (62) koaxial angeordnet sind und beide Enden einer normalerweise durch die Kurbelwelle (15) angetriebenen einzigen Pumpenwelle (61) mit den Pumpen (57, 62) verbunden sind.

3. Kraftrad nach Anspruch 1 oder 2, worin ein mit der Kurbelwelle (15) über eine Startergetriebeeinheit (94) verbundener Startermotor (11) an dem Kurbelgehäuse (21) derart montiert ist, dass er vor und unter der Kurbelwelle (15) angeordnet ist.

4. Kraftrad nach Anspruch 1 oder 2, worin ein Ölfilter (70) in einer in dem Kurbelgehäuse (21) ausgebildeten Filterkammer (71) derart montiert ist, dass er im Wesentlichen direkt über der Kurbelwelle (15) positioniert ist, und die Filterkammer (17) durch den Ölfilter (70) in eine Einlasskammer (71 a), die mit einer Auswurföffnung der Schmierölpumpe (57) verbunden ist, und eine Auslasskammer (71 b), die mit den zu schmierenden Teilen der vorderen und der hinteren Bank (4_1 und 4_2) verbunden ist, unterteilt ist.

Revendications

1. Motocycle ayant un moteur à combustion interne du type en V dans lequel une rangée avant (4_1) et une rangée arrière (4_2) sont disposées devant et derrière dans une partie supérieure d'un carter de vilebrequin (21) de manière à se couper l'une l'autre selon une forme de V centrée sur un vilebrequin (15) disposé latéralement dans un état où le vilebrequin (15) est monté sur un châssis (1), et une partie de carter de transmission (95) pour contenir une transmission (8) est intégralement agencée sur une partie arrière dudit carter de vilebrequin (21) pour contenir ledit vilebrequin (15), **caractérisé en ce qu'**une pompe à huile de lubrification (57) pour alimenter de l'huile vers des parties à lubrifier desdites rangées avant et arrière (4_1, 4_2) et une pompe à eau de refroidissement (62) pour alimenter de l'eau de refroidissement vers des chemises d'eau (24_1, 24_2) desdites rangées avant et arrière (4_1, 4_2) sont agencées dans ledit carter de vilebrequin (21) de manière à être disposées latéralement à l'avant et au-dessus dudit vilebrequin (15).

2. Motocycle selon la revendication 1, dans lequel ladite pompe à huile de lubrification (57) et ladite pompe à eau de refroidissement (62) sont disposées coaxialement, et les deux extrémités d'un arbre de pompe unique (61) entraîné habituellement par ledit vilebrequin (15) sont reliées auxdites pompes (57, 62).

3. Motocycle selon la revendication 1 ou 2, dans lequel un moteur de démarrage (11) relié audit vilebrequin (15) par une unité de transmission de démarrage (94) est monté sur ledit carter de vilebrequin (21) de manière à être disposé à l'avant et en dessous dudit vilebrequin (15).

4. Motocycle selon la revendication 1 ou 2, dans lequel un filtre à huile (70) est monté dans une chambre pour filtre (71) formée dans ledit carter de vilebrequin (21) de manière à être positionné sensiblement directement au-dessus dudit vilebrequin (15), et ladite chambre pour filtre (71) est cloisonnée par ledit filtre à huile (70) en une chambre d'entrée (71a) reliée à un orifice d'évacuation de ladite pompe à huile de lubrification (57) et une chambre de sortie (71b) reliée auxdites parties à lubrifier desdites rangées avant et arrière (4_1, 4_2).

FIG. 1

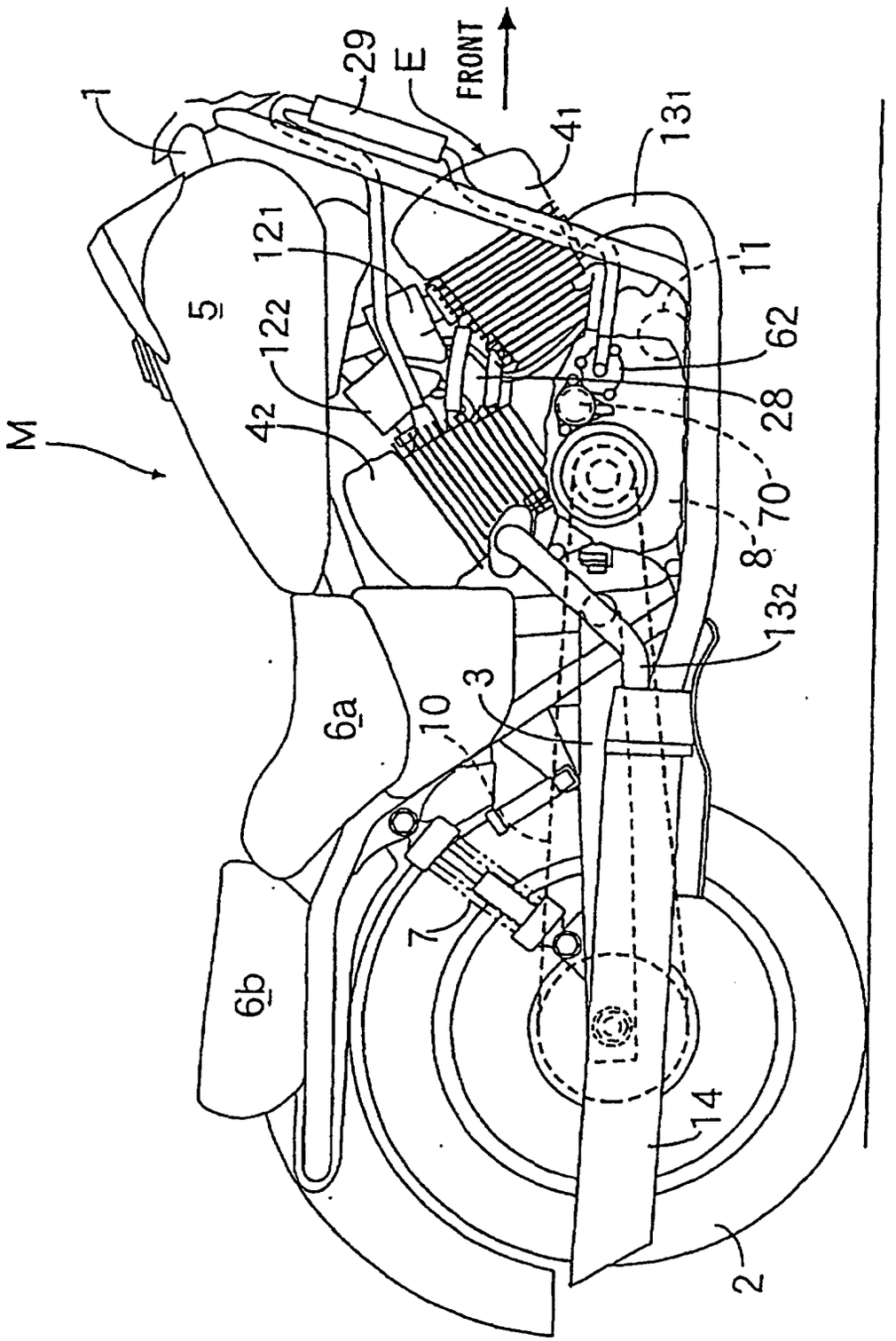

FIG. 2

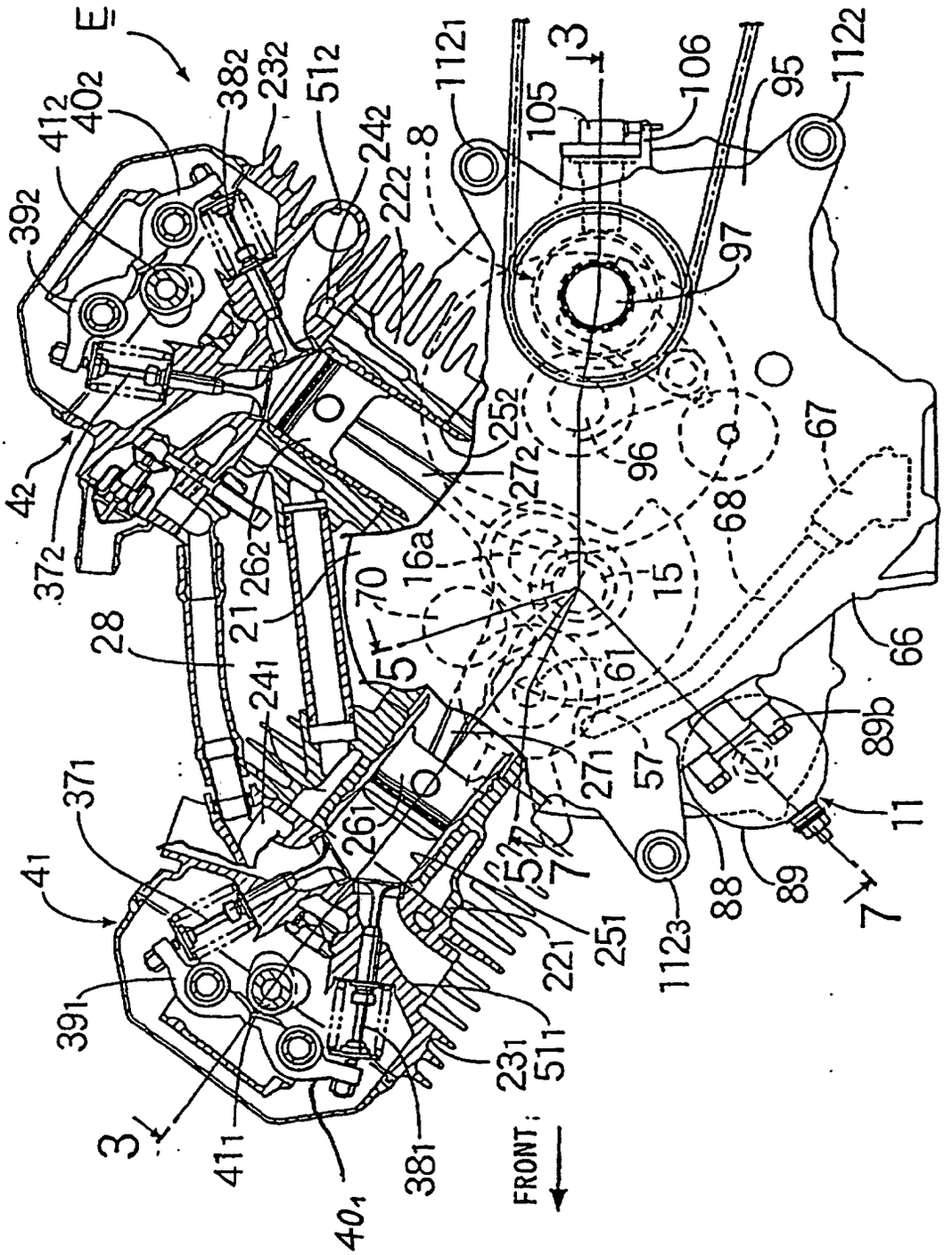

FIG. 3

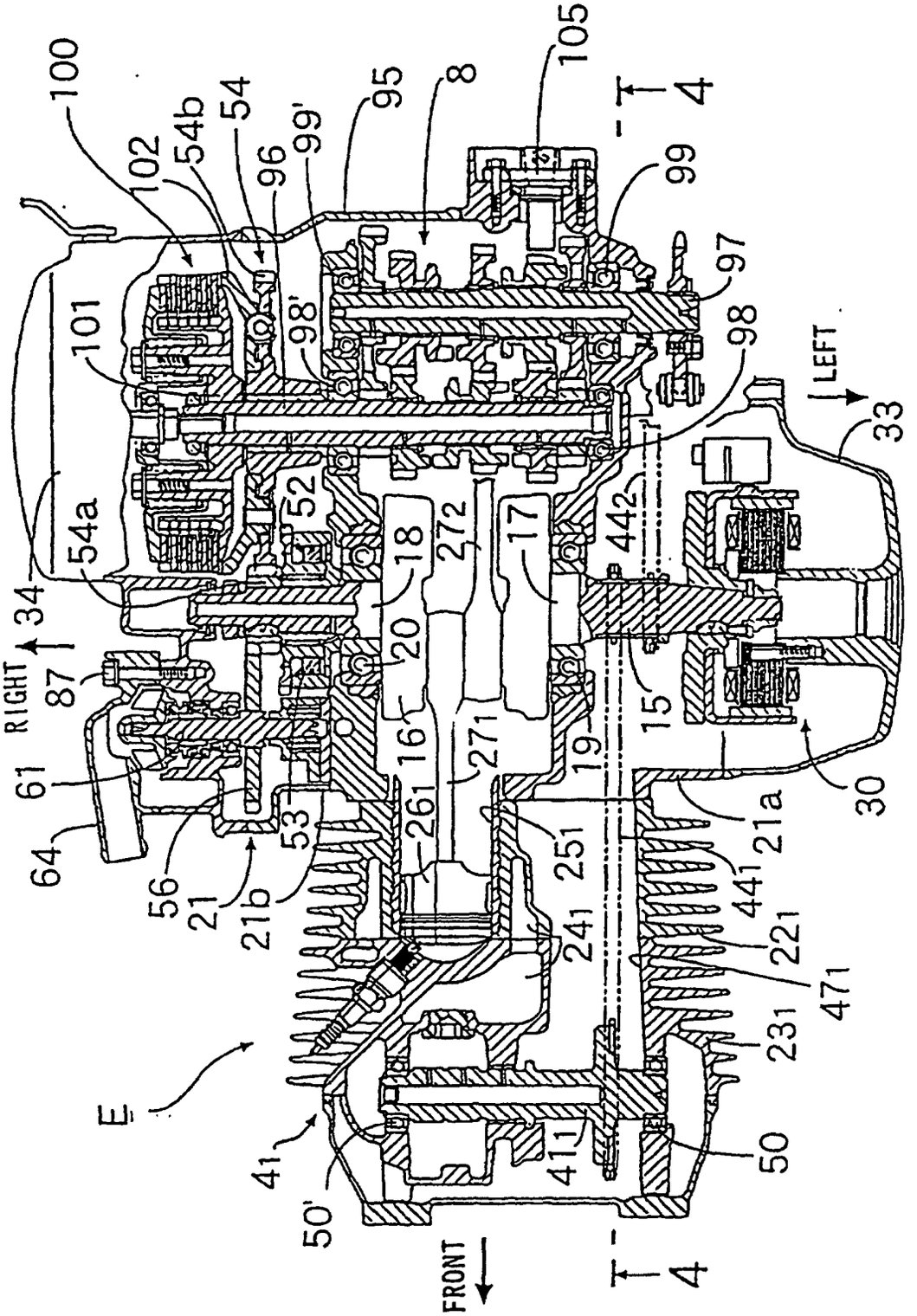
100
102
54b
54
96
99'
95
8
105
4
99
97
98
98'
101
LEFT
33
52
18
27₂
17
44₂
54a
34
RIGHT
87
20
16
27₁
19
15
61
64
56
21
21b
53
26₁
25₁
21a
30
44₁
24₁
22₁
47₁
23₁
E
41
41₁
50
50'
FRONT
4

FIG. 4

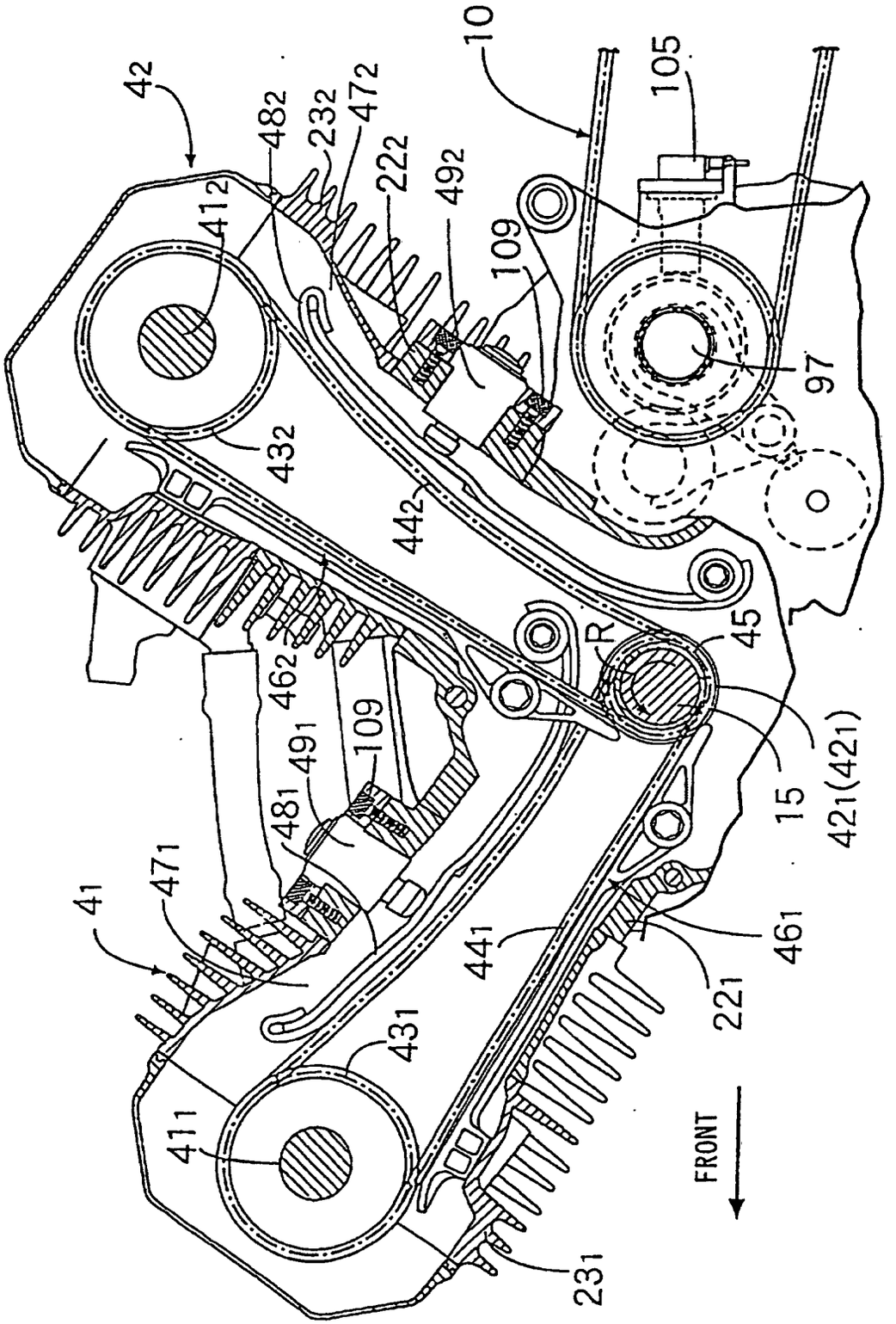
42
482
232
472
222
492
10
105
412
109
97
432
442
45
R
462
491
109
481
15
421(421)
41
471
441
461
221
431
411
231
FRONT

FIG. 5

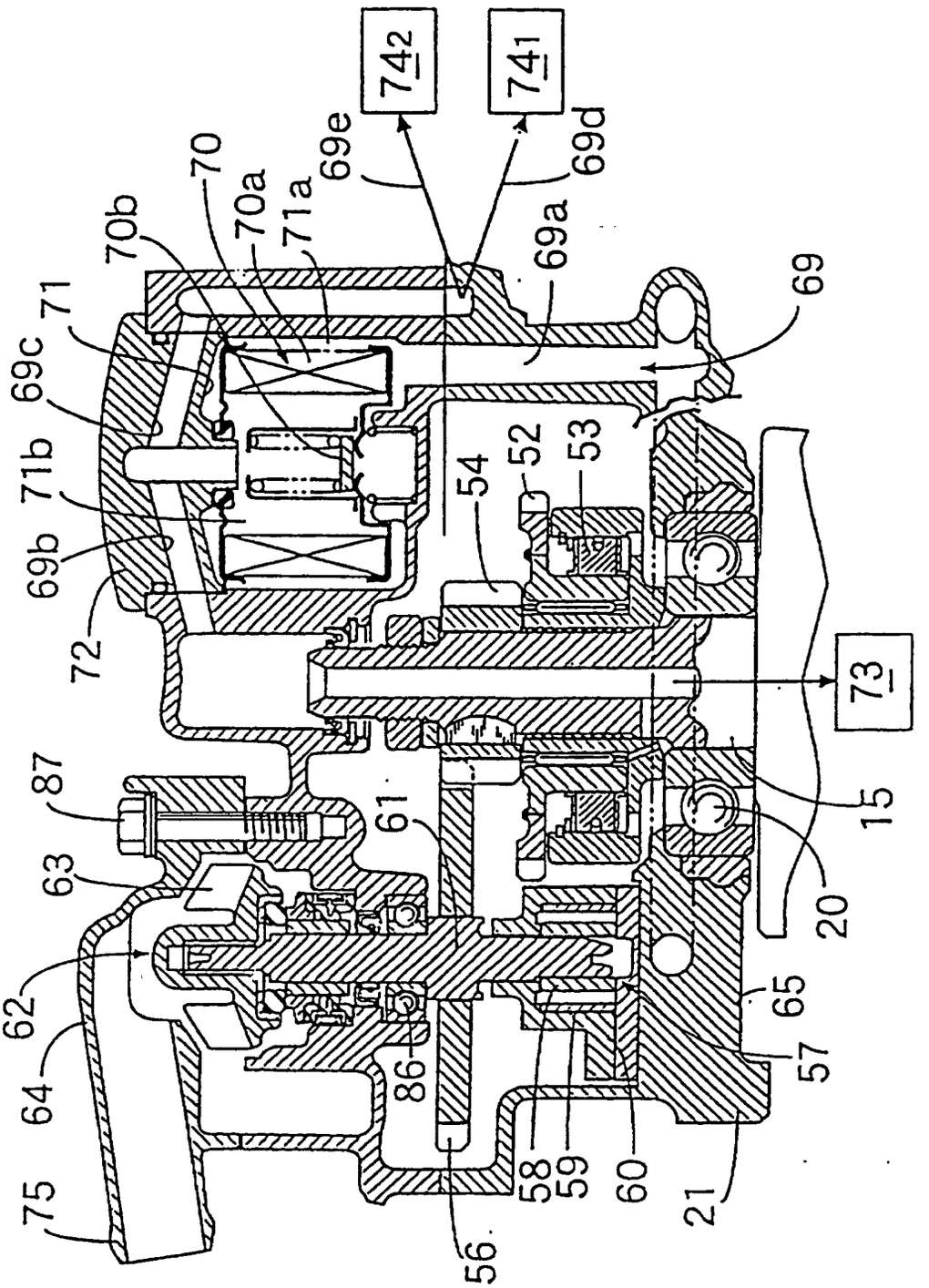
74 2
74 1
69e
69d
70
70a
71a
70b
69a
69
71
69c
71b
69b
72
54
52
53
73
87
61
15
63
20
62
65
64
86
57
58
59
60
21
75
56

FIG. 6

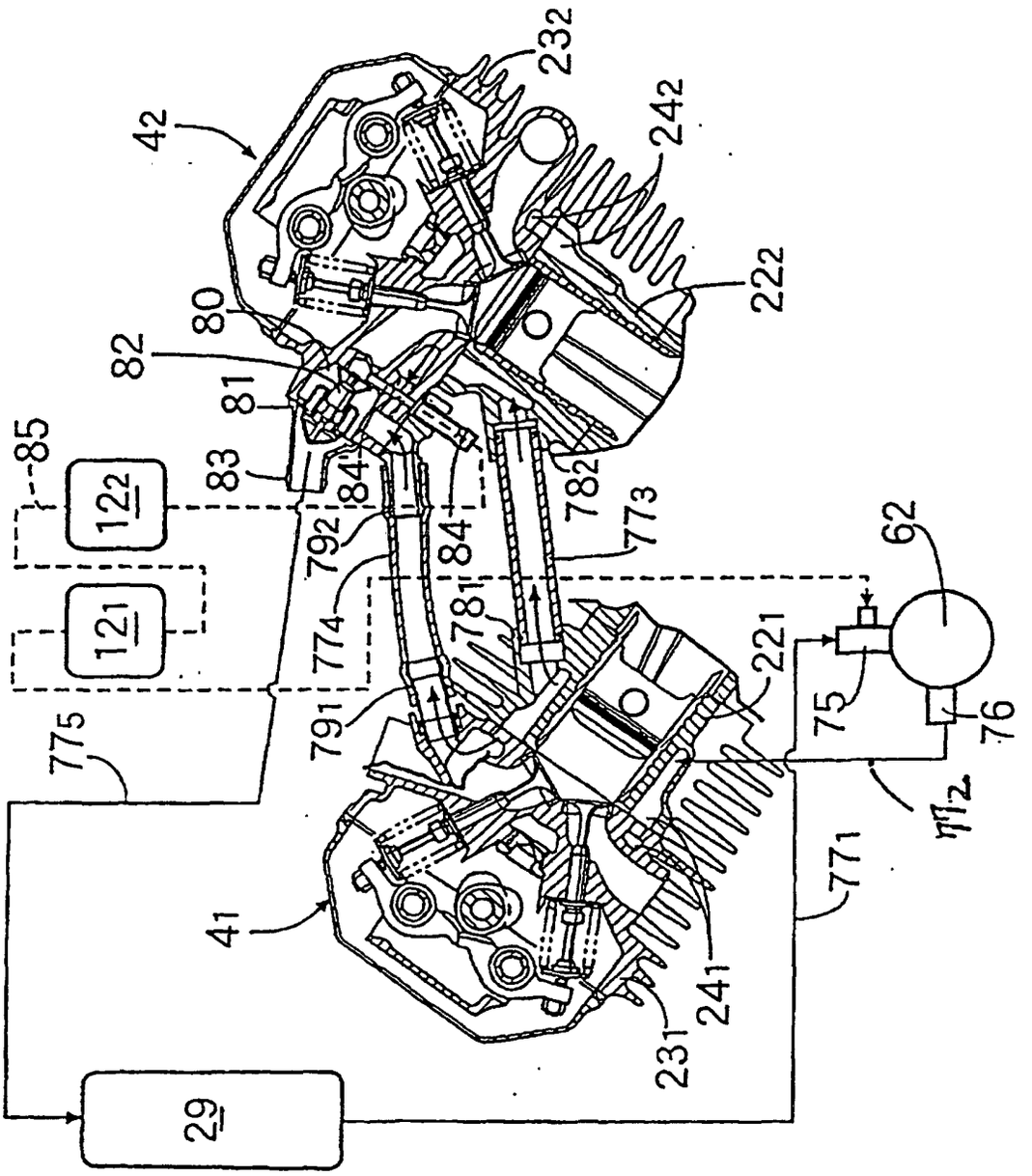
42
232
242
222
80
82
81
83
85
122
121
84
84
792
774
781
782
773
62
221
75
76
772
771
775
791
41
241
231
29

FIG. 7

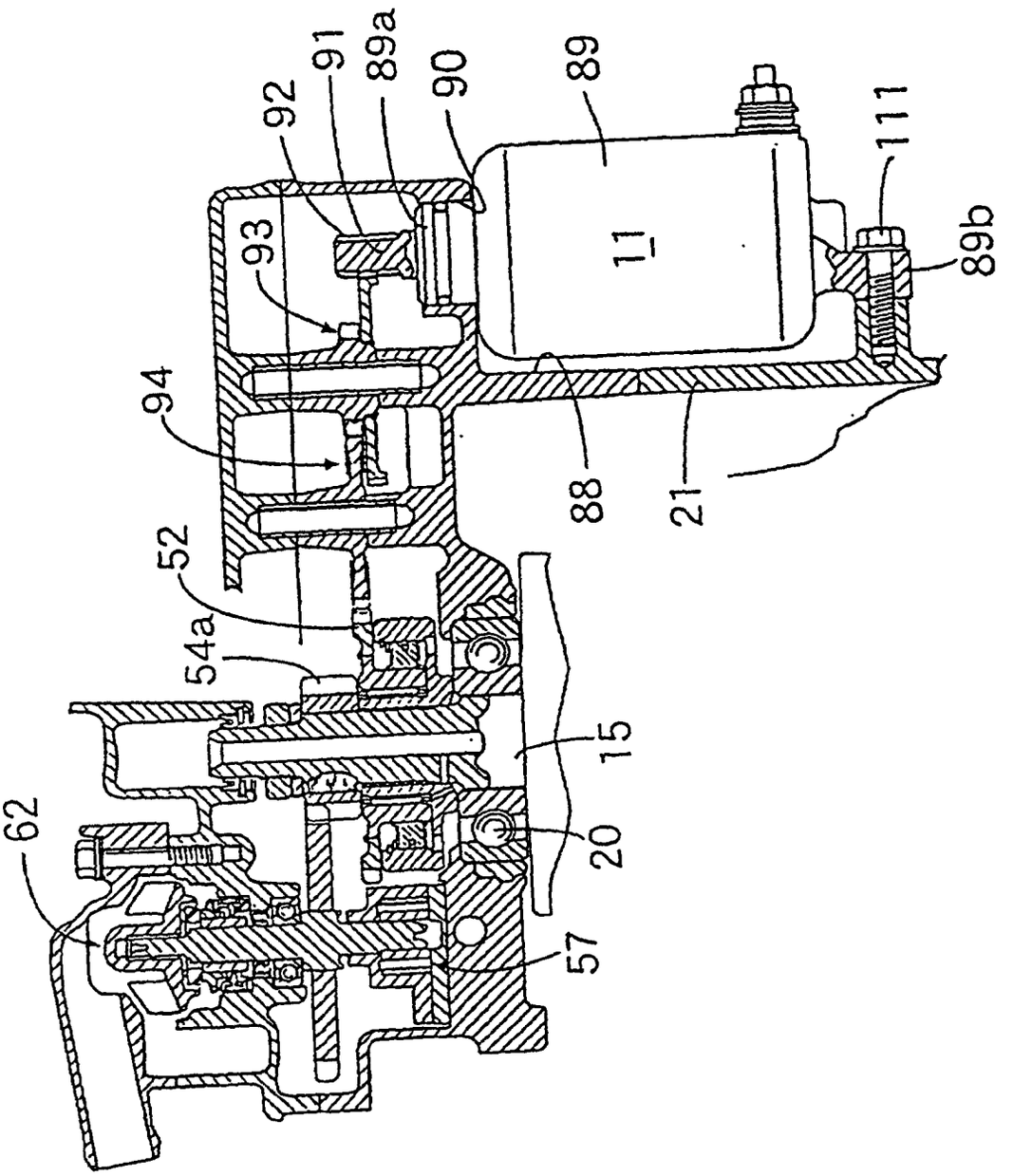

FIG. 8

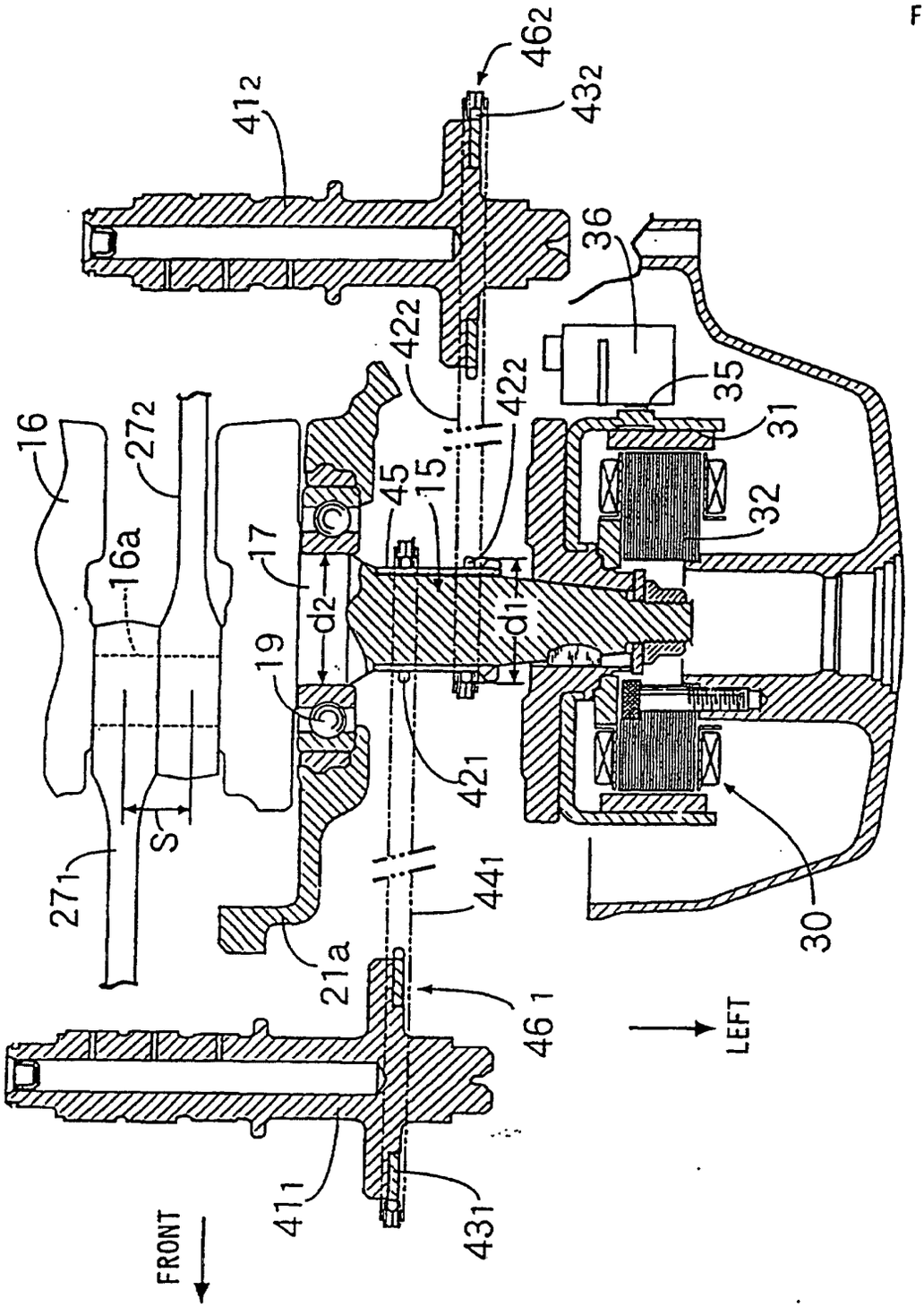
462
432
412
36
422
422
35
31
16
272
45
15
32
16a
17
d2
d1
19
421
S
271
441
21a
461
LEFT
30
411
431
FRONT

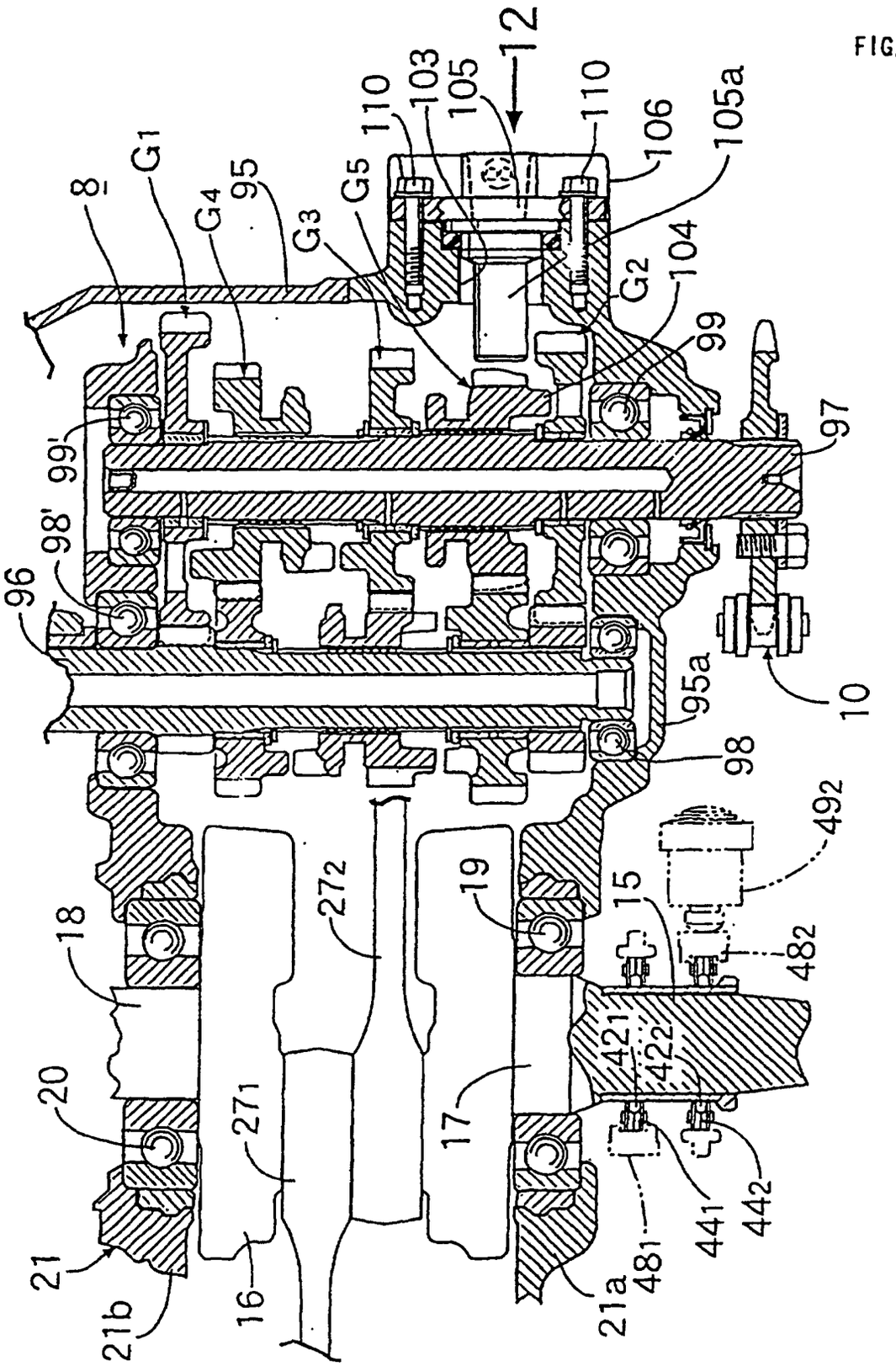
12
8
G1
G4
95
G3
G5
110
103
105
110
106
105a
G2
104
99
97
99'
98'
96
95a
10
98
49₂
15
48₂
18
27₂
19
20
27₁
17
42₁
42₂
44₁
44₂
48₁
21
21b
16
21a

FIG. 9

FIG. 10

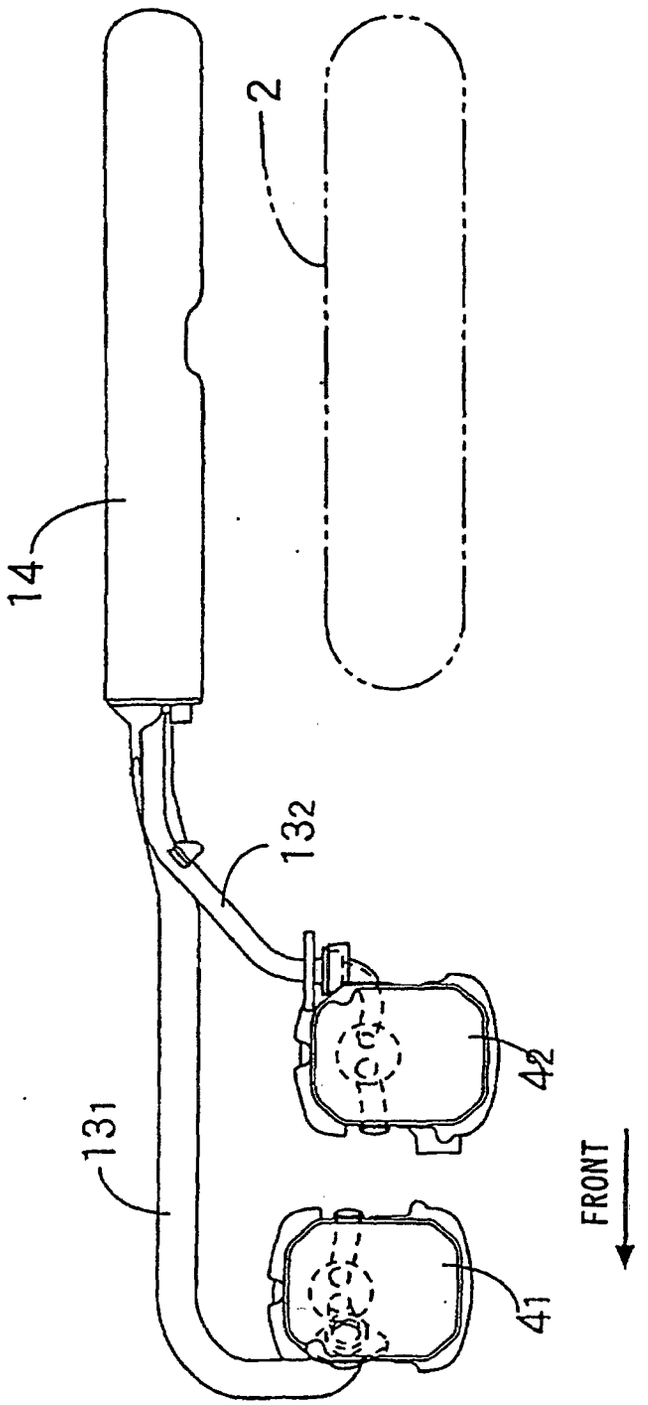

FIG. 11

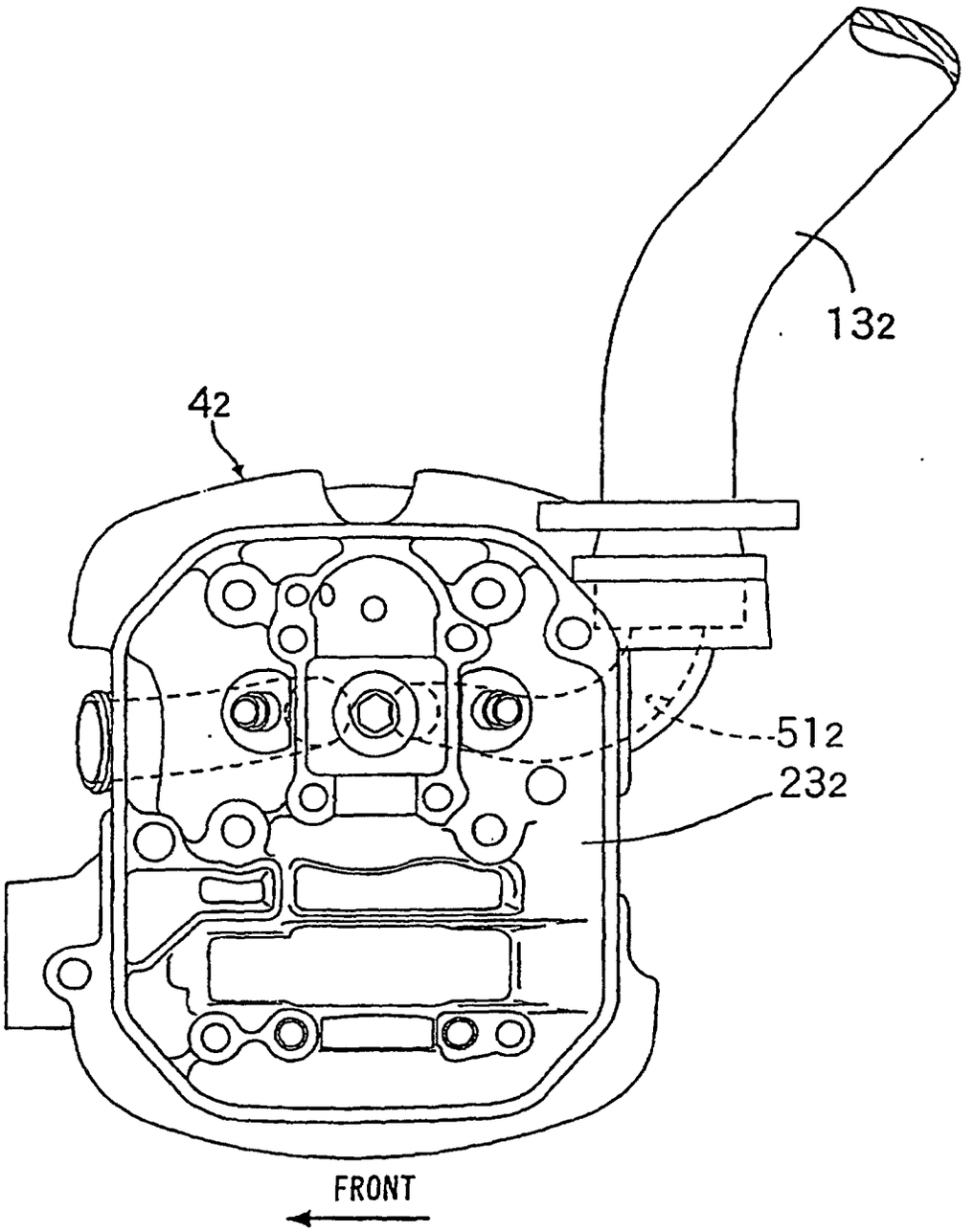

FIG. 12

