Jan. 12, 1932. R. L. MULLER 1,841,139

AUTOMATIC INKING DEVICE FOR PRINTING RIBBONS

Filed April 21, 1928 2 Sheets-Sheet 1

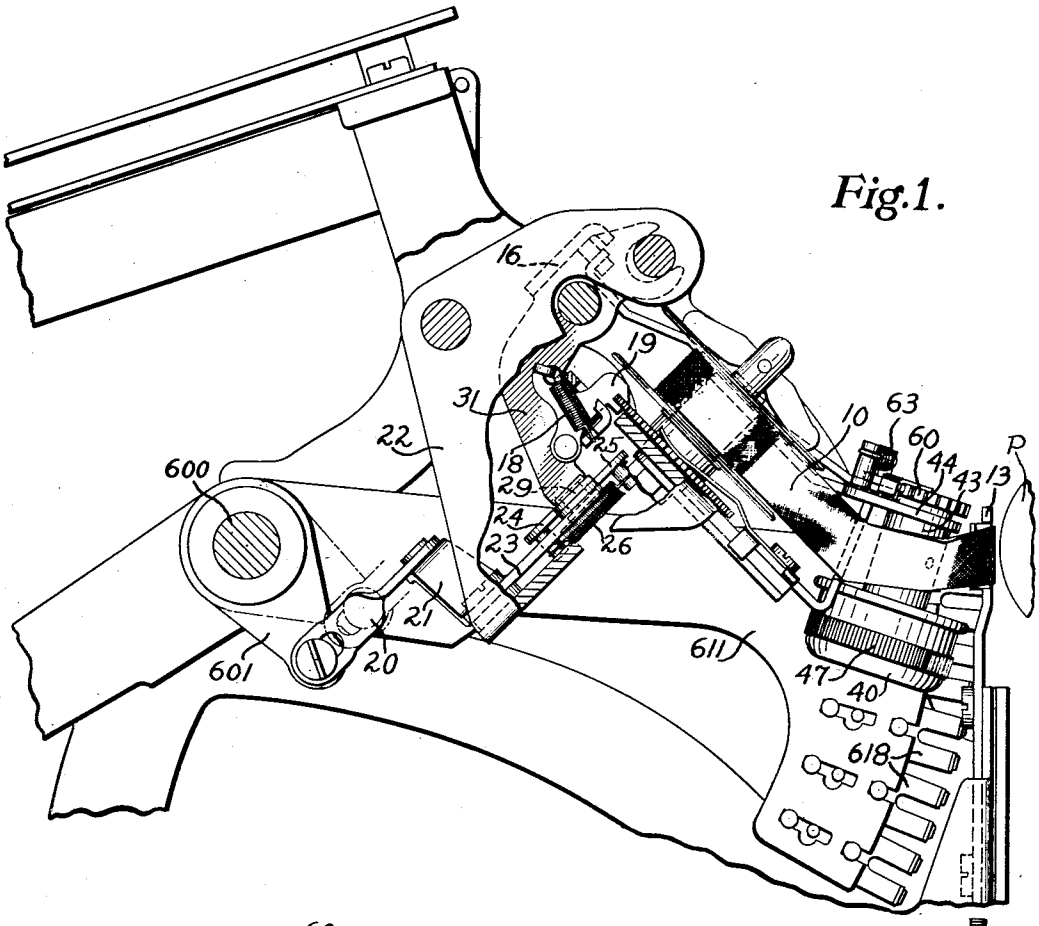

Fig. 1.

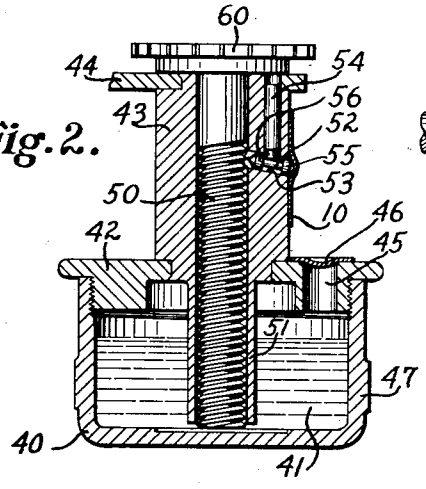

Fig. 2.

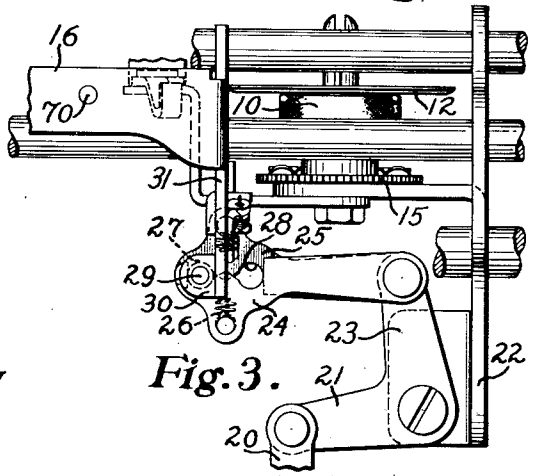

Fig. 3.

INVENTOR
ROBERT L. MULLER
BY
Rector, Hibben, Davis & Macauley
ATTORNEYS

Jan. 12, 1932. R. L. MULLER 1,841,139

AUTOMATIC INKING DEVICE FOR PRINTING RIBBONS

Filed April 21, 1928 2 Sheets-Sheet 2

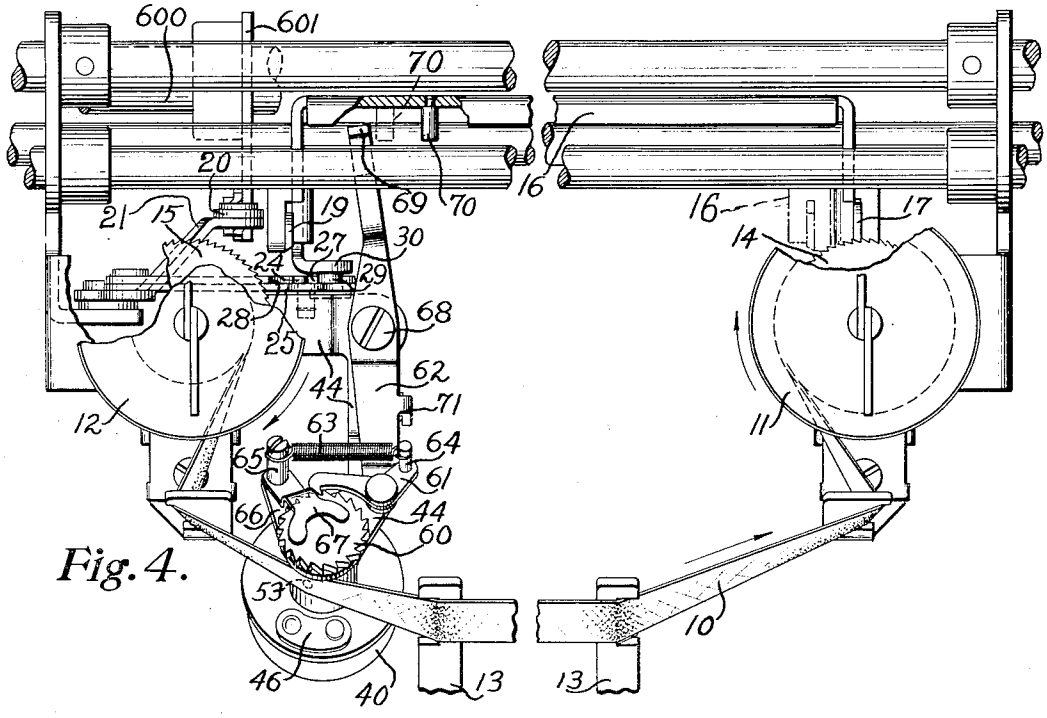

Fig. 4.

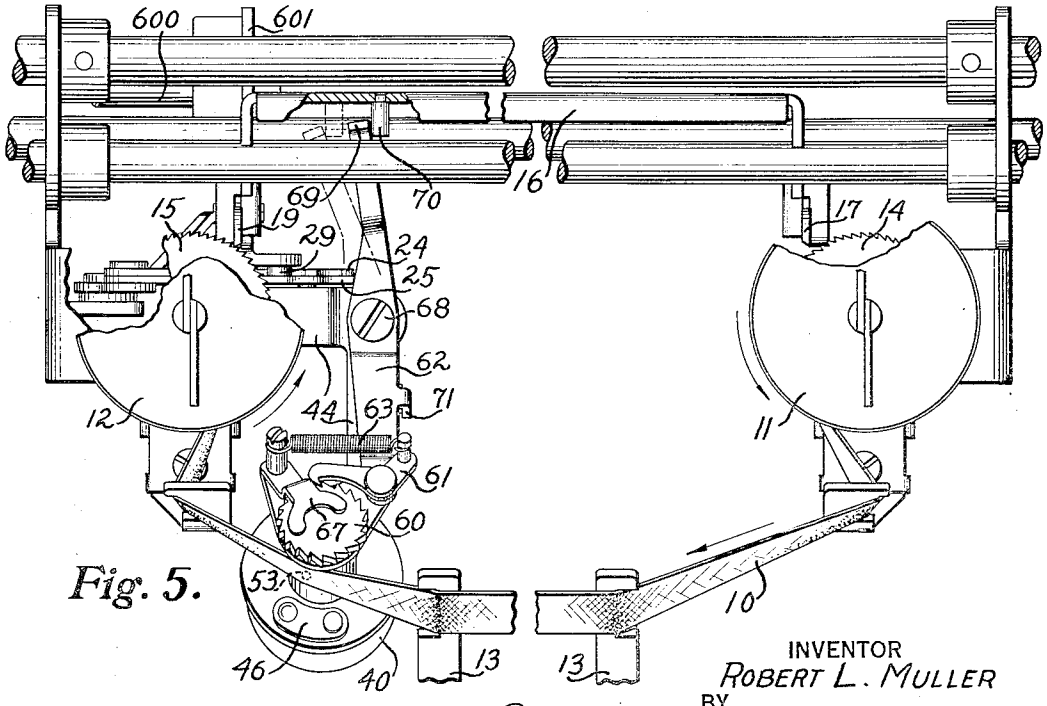

Fig. 5.

INVENTOR
ROBERT L. MULLER
BY
Rector, Hibben, Davis & Macauley
ATTORNEYS

Patented Jan. 12, 1932 1,841,139

UNITED STATES PATENT OFFICE

ROBERT L. MULLER, OF DETROIT, MICHIGAN, ASSIGNOR TO BURROUGHS ADDING MACHINE COMPANY, OF DETROIT, MICHIGAN, A CORPORATION OF MICHIGAN

AUTOMATIC INKING DEVICE FOR PRINTING RIBBONS

Application filed April 21, 1928. Serial No. 271,667.

This invention relates to an automatic inking device for printing ribbons, that is, to a device for automatically inking printing ribbons while they are in use on calculating machines, bookkeeping machines, typewriters, and the like. The invention has been developed particularly for use with calculating machines and it will be described in connection with such a machine, but it may be used in other types of machines employing printing ribbons in a similar manner.

The printing of characters and figures in a calculating machine is almost universally accomplished by means of a printing mechanism having types which, after being properly positioned, are driven against a sheet of paper carried by a platen. A printing ribbon is interposed between the types and the paper to record the impression. The ribbon travels along the printing line from one ribbon spool to another under the influence of a feeding mechanism which usually includes a reversing device such that, when the ribbon has been wound from one spool on to the other, the reversing device will reverse the action of the feeding mechanism to rewind the ribbon back on to the spool from which it has just been wound. The ribbons for these machines are made of a textile fabric which is inked before the ribbon is put on the machine, in fact, the ribbons are purchased already inked and wound on a spool. This spool is inserted in the machine and the ribbon threaded through holding devices and along the printing line of the platen to a second spool to which it is fastened.

Calculating machines are often operated continuously during the day, and day after day. They are very hard on ribbons. When a new ribbon is inserted the machine prints quite heavy and legible, but the figures gradually become fainter and fainter until it is necessary to remove the old ribbon and insert a new one. This is not only tedious, but it also soils the hands of the operator. Naturally the operators do not like to change the ribbons, with the result that they often use them longer than they should and the printing is very faint. In certain classes of work, such as ledger posting, entries on the same sheet are made at different times, and on different days. With the ordinary ribbon some of these entries, to-wit, those made when the ribbon was new, will be heavy and legible, while others made when the ribbon is older are of different degrees of faintness and legibility. This makes a bad looking record and is not a desirable condition. Another disadvantage of the ordinary ribbon is that its useful life is too short, that is, it drys out before the ribbon itself is actually worn out. Also the dry ribbons wear out more quickly than when they are moist and properly inked. All this increases the cost of maintaining the printing equipment, results in bad records, loss of time, and inconvenience to the operators.

The present invention has been devised to overcome these obstacles and to increase the length of useful life of the ribbon as well as to enable it to give uniform printing impression throughout its life, these results being accomplished by an automatic inking device which supplies ink to the ribbon as it is being used.

The provision of a practical device of this kind is a difficult problem owing to the fact that it is necessary to supply the ink uniformly, but it must be supplied only in very minute quantities. If it is not supplied uniformly, the ribbon will not give uniform impressions, and if it is supplied in too great quantities, the ribbon will smudge or smear the impression. On account of the minute amount of ink that must be supplied, it is difficult to prevent the clogging or stopping of the ink supply.

The general object of the invention is, therefore, to provide an improved automatic inking device for inking a printing ribbon while it is being used.

A more particular object is to provide an inking device of the kind described which will be positive in its action and which will ink the ribbon in such a manner that the ink will be evenly distributed in minute quantities.

Other objects and advantages of the invention will hereinafter appear.

An embodiment of the invention is shown in the accompanying drawings in which,—

Figure 1 is a partial sectional side elevation of the rear part of a Burroughs calculating machine with the automatic inking device applied thereto.

Fig. 2 is an enlarged sectional view of the ink reservoir and the means for feeding the ink to and distributing it on the ribbon.

Fig. 3 is a partial plan view of the ribbon feeding mechanism including the reversing means therefor,

Fig. 4 is a partial plan view of the ribbon feeding mechanism and the automatic inking device showing the parts in the position they occupy when the inking mechanism is not in operation.

Fig. 5 is a partial plan view similar to Fig. 4 showing the parts in the position they occupy when the inking device is being operated.

The inking device is shown in connection with a Burroughs calculating machine of a type well known in the calculating machine art and described in numerous patents. This machine has an operating mechanism including a shaft 600 carrying an arm 601 which is oscillated from the full to the dotted line position of Fig. 1 and back again at each operation of the machine. A printing mechanism is provided including a type sector 611 carrying movable type 618, said sectors being positioned during operation of the machine after which the type bars are driven against a platen P by means of a hammer mechanism, not shown, but which is described in detail in Burroughs Patent No. 505,078.

A printing ribbon 10 is wound from a right hand spool 11 (Fig. 5) to a left hand spool 12 under the action of a feeding mechanism, and, then, after the ribbon has been completely unwound from the spool 11, the feeding mechanism is automatically reversed and the ribbon is wound from the spool 12 to the spool 11 as illustrated in Fig. 4. As the ribbon is wound from one spool to the other, it is guided along the printing line of the platen P by suitable guides 13 illustrated in Figs. 1, 4 and 5.

The ribbon feeding mechanism is actuated by the operating mechanism of the calculating machine, the action being such that the feeding mechanism is given a short stroke of movement at each operation of the machine. The ribbon spool 11 is provided with a ratchet disk 14 having its teeth inclined in one direction and the spool 12 has a similar ratchet disk 15 with its teeth inclined in the other direction. These ratchets are operated by a reciprocating slide 16 which moves back and forth between the positions illustrated in Figs. 4 and 5 by the full and dotted line positions of a stud in the slide. Mounted on the right hand end of the slide is a pawl 17 which is urged into engagement with the teeth of the ratchet 14 by a spring 18 shown in Fig. 1. A similar pawl 19 is carried by the left hand end of the slide for engagement with the teeth of the ratchet 15.

The slide 16 is reciprocated by connections with the shaft 600 which are best illustrated in Figs. 1 and 3. The arm 601 is connected by a pin and slot connection to a link 20 which, in turn, is connected to one arm 21 of a bell crank lever pivoted on a stationary plate 22. Pivoted on the other arm 23 of the bell crank lever are two scissors members 24 and 25 whose outer ends are urged toward one another by a spring 26. The inner edges of these scissors members are provided with outer registering notches 27 and inner registering notches 28 which are spaced some distance apart and which are shaped to receive a cylindrical stud 29 projecting from an ear 30 on an extension 31 of the reciprocating slide 16. Each time the shaft 600 of the machine is rocked, the bell crank lever 21—23 is rocked by the link 20 and its movement is transmitted through the scissors members 24 and 25 to the reciprocating slide 16 which is thereby moved back and forth at each operation of the machine to feed the ribbon.

The automatic reversal of the feeding mechanism is obtained through the scissors connection above described. It will be observed that, when the parts are in the position shown in Fig. 4, the pawl 17 is in position to operate the ratchet 14 of the spool 11, but the pawl 19 will not engage the ratchet 15 of the spool 12, because the range of movement of slide 16 does not bring pawl 19 into engagement with the ratchet 15. For example, the dot and dash line position of the slide 16 is the extreme left hand position of the slide when the parts are conditioned as shown in Fig. 4. In this position, the pawl 19 stops short of contact with the ratchet 15. The slide moves back and forth during operation of the machine, from the dot and dash to the full line position of the stud 70 and, in so moving, the pawl 17 will move the ratchet 14 to give the spool 11 a feeding step which will wind the ribbon from the spool 12 to the spool 11. When the ribbon has been completely unwound from the spool 12, it becomes taut under the action of the feeding mechanism, owing to the fact that the end of the ribbon is fixed to the spool 12. The ribbon thus serves to resist further feeding movement of the feeding mechanism by the pawl 17 and, when this resistance becomes great enough, the movement of the slide 16 to the right, as viewed in Figs. 4 and to the left in Fig. 3 is blocked. Referring to Fig. 3, if the movement of the slide 16 to the left is blocked, and force is applied to the bell crank lever 21—23 to rock it counterclockwise, as it is by the operating mechanism, the result is that the scissors members

24 and 25 will separate against the tension of spring 26 and move over the stud 29 to position the inner notices 28 over the stud. This automatically changes the connection between the bell crank lever 21—23 and the slide 16 so that, instead of the slide being moved between the two positions illustrated in Fig. 4, it is moved between the two positions illustrated in Fig. 5. This change in the range of movement of slide 16 changes the range of movement of pawls 17 and 19. The pawl 19 now moves to operate the ratchet 15 while the pawl 17 is out of range for operating the ratchet 14. Accordingly, as the machine is operated, the ribbon spool 12 will be stepped around counter-clockwise to rewind the ribbon back on to the spool 12 from the spool 11. The reverse action takes place when the ribbon has been completely unwound from the spool 11. The feeding mechanism is thus automatically reversed so as to wind the ribbon from one spool to the other. The pin and slot connection between the arm 601 and the link 20 permits the reversing action to take place under the influence of the spring 26 after the scissors arms 24 and 25 have moved so as to move the cam shaped hump between the notches 27 and 28 past the stud 29. In other words, the scissors may snap to place without interference from the connection to the shaft 600.

The automatic inking device includes an ink reservoir 40 containing a supply of ink 41. The reservoir is screw-threaded on to a cover plate 42 supported by a cylindrical sleeve 43 that is carried by an arm 44 which is supported by one of the ribbon spool shafts as illustrated in Figs. 1 and 5. This arm holds the inking device out in position where it may contact the ribbon. The ink reservoir 40 has a filling opening 45 closed by a removable spring cap 46 to permit the supply of ink to be replenished, such replenishing being seldom required due to the fact that the ink is fed in such limited quantities. The reservoir is knurled at 47 to enable it to be easily unscrewed from the cover 42 to permit cleaning.

The ink is automatically fed from the reservoir to a distributing means which spreads it on the ribbon as the latter travels past the inking device.

The feeding means includes a rotatable shaft or feeding member 50 having a spiral groove or thread from its bottom to near its top, as illustrated in Fig. 2. This shaft rotates in an opening in the sleeve 43, said sleeve having an extension 51 which projects into the ink reservoir to a point near the bottom of the latter. The shaft 50 extends slightly below the end of the sleeve 51 so that, as it is rotated, the spiral groove will pick up ink from the reservoir. It will be readily apparent that when the shaft is rotated, which it is, step by step as will be later described, the spiral groove will positively raise a small quantity of the ink.

The ink distributing means includes a plunger 52 mounted to reciprocate in an inclined opening 53 in one side of the sleeve 43. This plunger has a reduced portion for receiving the end of a pin 54 which limits the reciprocatory movement of the plunger and prevents it from moving out of the opening 53. The plunger has a rounded head 55 adapted to be projected outwardy beyond the surface of the sleeve 43 into contact with the ribbon 10 as shown in Fig. 2. The opposite end of the plunger has a pointed head 56 adapted to engage the spiral groove in the feeding shaft 50. Both of the plunger heads fit loosely in the opening 53 so that ink may work past them from one end of the plunger to the other. This plunger is automatically projected outward by the feeding means as it is rotated, that is, the pointed head 56 rides into and out of the grooves in member 50. The tension on the ribbon 10 forces the plunger back into the grooves and the feeding member 50 forces it out again against the tension of the ribbon. The plunger is thus moved back and forth to pump the ink in small quantities from the feeding means and to distribute it to the ribbon. The head 56 of the plunger serves to scrape some of the ink off the shaft 50 and to transfer it to the opening 53.

The inking device is positively actuated and, for this purpose, the feeding member 50 has a ratchet disk 60 fixed to the top of it with which cooperates a feed pawl 61 (Fig. 4) carried on the end of a feed arm 62. The pawl 61 is urged into engagement with the ratchet 60 by a spring 63, one end of which is connected to a stud 64 on the pawl and the other end to a stud 65 on an extension 66 of the arm 44 which supports the inking device. The stud 65 also holds a leaf spring 67 in place, the latter bearing on the ratchet disk 60 to releasably hold the same in the positions to which it is moved by the feed pawl. The feed arm 62 is pivoted at 68 to the supporting arm 44 and the end opposite to that carrying the pawl 61 has a lug 69 which is positioned to be engaged by a stud 70 on the reciprocating slide 16. When the parts are in the position illustrated in Fig. 5, the reciprocation of the slide 16 moves the stud 70 from the full to the dotted line position and back again at each operation of the machine which results in rocking the feed arm 62 counter-clockwise during each operation to advance the ratchet disk 60 one step, the feed arm 62 being returned in each case by the spring 63. The ratchet disk 60 is thus advanced one step during each operation of the machine when the parts are in the position of Fig. 5, and the feeding member 50 is rotated a short distance in a direction to cause its spiral groove to raise the ink from

the reservoir, said member also reciprocating the plunger 52. A lug 71 projecting downward from the arm 62 engages the support bracket 44 to prevent overthrow of the arm 62 in its clockwise movement.

As the feeding member 50 is stepped around, the ink is raised to the top of the spiral groove from which it is discharged into the inclined opening 53. As the feeding member 50 is revolved, the plunger 52 is reciprocated in the manner heretofore described and, when the groove 53 receives the ink, this plunger acts to gradually work the ink outward. The head 56 fits loosely in the opening 53, but it is sufficiently tight to prevent free flow of the ink. The fit is such that the reciprocation tends to work some of the ink past the plunger and into the space between the two heads of the plunger from where it is worked on out by the plunger head 55 which also fits loosely into the opening 53. The plunger head 55 discharges the ink in minute quantities and distributes it along the ribbon 10 as the latter moves across the plunger head. The ink that is used is very thick so that it does not flow out as a freely flowing liquid, but is worked out as a pasty mass which issues around all of the edges of the circular opening 53. The ink is not distributed in one spot, but is distributed over a considerable space, and as the ribbon wipes along the plunger head 55 and over the circular surface of the sleeve 43 and across the opening 53, the ink spreads on the ribbon near its center line which is the part most used. It spreads still farther through absorption and by the capillary action of the textile fabric in a manner that is well understood.

It is not desirable to use the ribbon immediately after it has been inked, but to allow the ink time to be absorbed by and spread evenly over the ribbon. In order to avoid this difficulty the inking device is located between the guide 13 and one of the ribbon spools, the location in the embodiment illustrated in the present case being between the guide 13 and the ribbon spool 12. The feed arm 62 is then positioned so that its lug 69 is in the path of the stud 70 when the ribbon is being fed from right to left as is illustrated in Fig. 5. During this feeding action of the ribbon, the automatic inking device is operated and the ribbon is inked. As it is inked, it is wound from the inking device on to the spool 12, where it remains for a sufficient length of time to permit the ink to distribute itself well through capillary attraction, the uniform action being aided by the fact that different layers of ribbon are wound on one another so that the ink may not only distribute itself in each layer, but may, in some cases, pass from layer to layer. The position of the feed arm 62 is such that, when the ribbon is being fed from the left to the right, as shown in Fig. 4, the lug 69 on the feed arm is out of the path of the stud 70 with the result that the automatic inking device is not operated during the time that the ribbon is wound from the spool 12 to the spool 11. Accordingly, no ink is distributed to the ribbon as it moves past the inking device over the guide 13 and along the printing line. The control of the actuation of the inking device is entirely automatic, said mechanism operating when the feeding mechanism is feeding the ribbon in one direction, but being automatically disabled when the feeding mechanism is reversed to feed the ribbon in the other direction.

It will be obvious that the small end portion of the ribbon between the ribbon end fastened to the spool 11 and the inking device will never be directly inked by contact with the inking device, because said end portion cannot contact the inking device. However, this small portion of the ribbon is maintained well inked by contact of the rest of the ribbon with it and the only part that is really used is the very small part between the inking device and the printing line. The moist and well inked ribbon is wound around this small end portion and the ink distributes itself from layer to layer so that no difficulty is encountered because this small portion does not contact the inking device.

From the above it will be observed that an automatic inking device has been provided which feeds the ink to the ribbon in minute quantities and in such a way that the feed is positive and there is little opportunity for clogging. The feeding screw forces the ink upward to the discharge opening and the plunger, which is reciprocated by the feeding screw, forces the ink outwardly. No reliance is placed upon the ink flowing of its own accord. Instead, it is forced by devices which overcome any tendency of clogging or sticking. The plunger arrangement is such that the ink cannot be fed too fast but yet it is positively fed in small quantities and distributed to the center of the ribbon where it is most needed. When the inking device is being operated, it is operated positively by the machine, the connection being through the feeding mechanism. The device is located and the operation of it is arranged so that the ribbon is not fed directly from the inking device to the printing line, but is wound on the spool after being inked so that the ink can evenly distribute itself before the ribbon is used. The whole device operates automatically without requiring any attention other than an occasional replenishing of the ink supply. It has been found that a ribbon which would ordinarily be capable of printing only 45,000 legible amounts when the full capacity of a calculating machine keyboard is used, will, when used with the present invention, give 250,000 legible prints with the full capacity of the keyboard. In other

words, the life of the ribbon is increased over five times.

It is to be understood that the construction shown is for purposes of illustration only and that variations may be made in it without departing from the spirit and scope of the invention as defined by the appended claims.

I claim:

1. The combination in a machine of the class described having a member moved during each operation of the machine, a printing mechanism, and a printing ribbon; of an automatic inking device having a receptacle containing a supply of ink, and means operated positively by said machine member at each operation of said machine for taking ink from said receptacle and forcing it in minute quantities to and distributing it on said ribbon.

2. The combination in a machine of the class described having a printing mechanism, a printing ribbon, and mechanism for feeding said ribbon along the printing line as the machine is operated; of an automatic inking device having a receptacle containing a supply of ink, and connections operated positively by said ribbon feeding mechanism for taking ink from said receptacle and forcing it in minute quantities to and distributing it on said ribbon.

3. The combination in a machine of the class described having a printing mechanism, a printing ribbon, and mechanism for feeding said ribbon first in one direction and then in the other direction along a printing line; of an automatic inking device having a receptacle containing a supply of ink, and means operated by said ribbon feeding mechanism when the ribbon is fed in one direction but inoperable when the ribbon is fed in the other direction for taking ink from said receptacle and forcing it in minute quantities to and distributing it on said ribbon.

4. The combination in a machine of the class described having a printing mechanism, ribbon spools, a printing ribbon, and mechanism for automatically winding said ribbon from one spool along a printing line to another spool and then reversing the direction of winding; of an automatic inking device for supplying minute quantities of ink to and distributing it on said ribbon, and means actuated by said ribbon feeding mechanism for actuating the inking device when the ribbon is fed in one direction but not when it is fed in the other.

5. The combination in a machine of the class described having a printing mechanism, ribbon spools, a printing ribbon windable from one ribbon spool along a printing line to a second ribbon spool, and mechanism for feeding said ribbon from one spool to the other including an automatic reversing device for reversing the direction in which said ribbon is wound; of an automatic inking device including means movable to supply minute quantities of ink to and distributing it on said ribbon, and means operated by said ribbon feeding mechanism for automatically operating said inking device while the ribbon is feeding in one direction, said means being automatically disabled by the reversal of the ribbon feeding mechanism by the reversing device.

6. The combination in a machine of the class described having a printing mechanism and a printing ribbon, of an automatic inking device having a closed receptacle containing a supply of ink, means operated by said machine to remove ink from said receptacle, and means acting to pump said removed ink to and distribute it on said ribbon.

7. The combination in a machine having a printing ribbon movable along a printing line, of an ink reservoir containing a supply of ink, a distributing means operable to distribute ink on the ribbon, a feeding means for feeding ink from said reservoir to said distributing means, and means for automatically operating the feeding means to feed ink to the distributing means, said feeding means having connections for operating the distributing means.

8. The combination in a machine having a printing ribbon movable along a printing line, of an ink reservoir containing a supply of ink, a plunger having a head with which said ribbon contacts as it is moved, a feeding means for supplying ink from the reservoir to the distributing plunger, and means for automatically reciprocating the plunger.

9. The combination in a machine having a printing ribbon movable along a printing line, of an ink reservoir containing a supply of ink, a plunger having a head with which said ribbon contacts as it is moved, a rotatable shaft having a spiral groove, one end of said shaft extending into the ink supply, the other end being positioned so that the spiral groove acts to intermittently move the plunger outwardly against the ribbon, and means for automatically rotating the shaft as the machine is operated.

10. The combination in a machine having a printing ribbon movable along a printing line, of an ink reservoir containing a supply of ink, a sleeve over which said ribbon is moved and which said ribbon contacts under tension, a plunger mounted in an opening in said sleeve and positioned to be projected against said ribbon, a feeding shaft having a spiral groove for feeding ink from said reservoir to the opening in which said plunger is mounted, and means for rotating said shaft step by step, said plunger having a pointed portion engaging said shaft so that said shaft intermittently pushes said plunger out against said ribbon.

11. The combination in a machine having a printing ribbon movable along a printing

line, of an ink reservoir containing a supply of ink, a sleeve over which said ribbon is moved and which said ribbon contacts under tension, a plunger loosely mounted in an inclined opening in said sleeve, said plunger having a rounded head for engaging said ribbon, a rotatable shaft having a spiral groove for feeding ink from said reservoir to said opening, and means for rotating said shaft step by step, said plunger having a pointed head spaced from the rounded head and engaging said feeding shaft, said plunger being of such length that the raised portions of the shaft between the spirals of the groove move the plunger outward against the ribbon and the tension of the ribbon moves the plunger inward to move the pointed end into the groove in the shaft.

12. The combination in a machine of the class described having a printing mechanism and a printing ribbon, of an automatic inking device having a closed receptacle containing a supply of ink, means operated by said machine for raising ink from said receptacle, and pumping means operated by said raising means for forcing said raised ink to and distributing it on said ribbon.

In testimony whereof, I have subscribed my name.

ROBERT L. MULLER.