Oct. 27, 1964 P. J. PLISHNER 3,154,360

MULTI-CONDUCTOR COAXIAL ELECTRICAL CONNECTOR

Filed Oct. 29, 1962 2 Sheets-Sheet 1

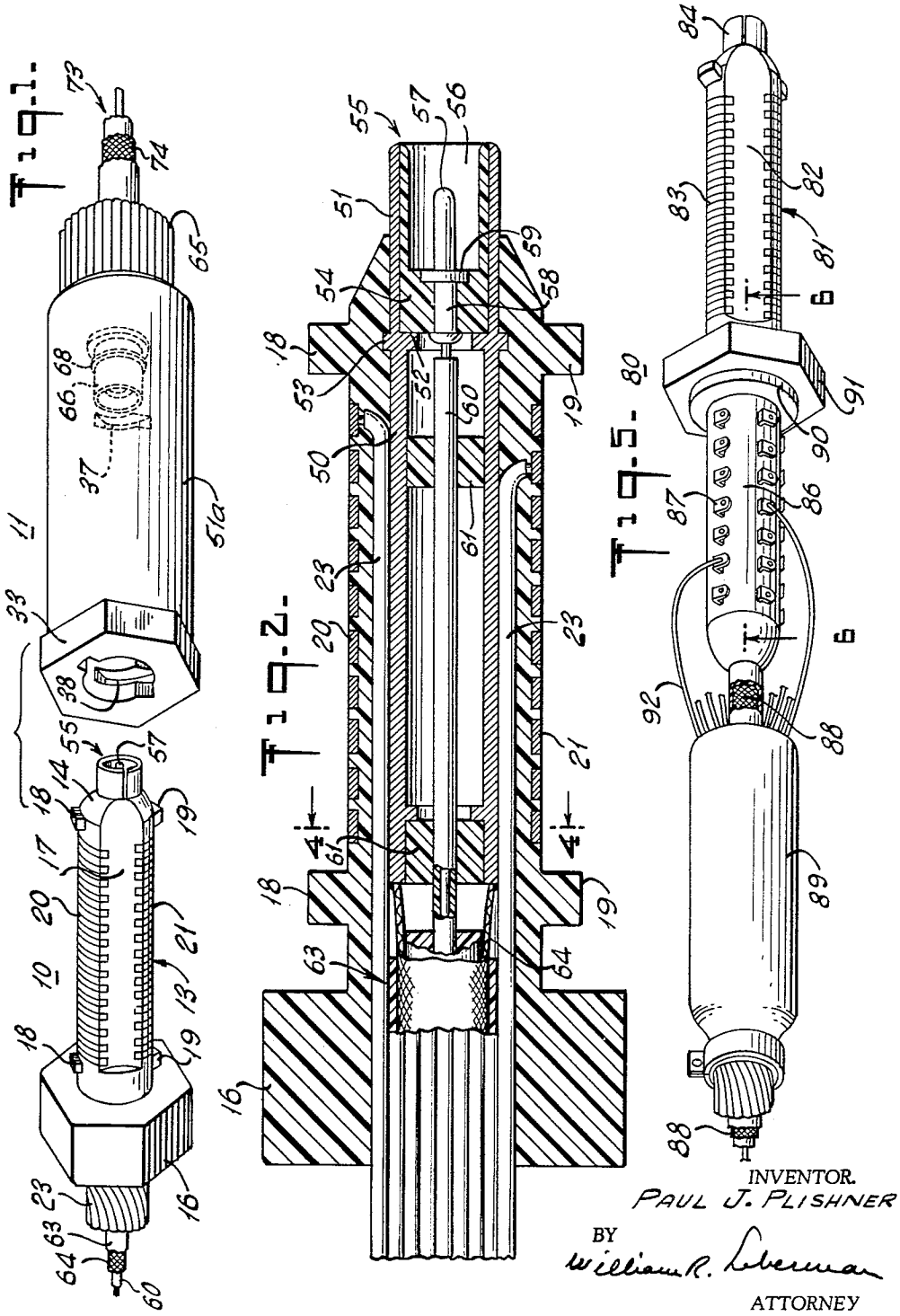

INVENTOR.
PAUL J. PLISHNER

BY
William R. Liberman

ATTORNEY

Oct. 27, 1964 P. J. PLISHNER 3,154,360

MULTI-CONDUCTOR COAXIAL ELECTRICAL CONNECTOR

Filed Oct. 29, 1962 2 Sheets-Sheet 2

FIG. 3.

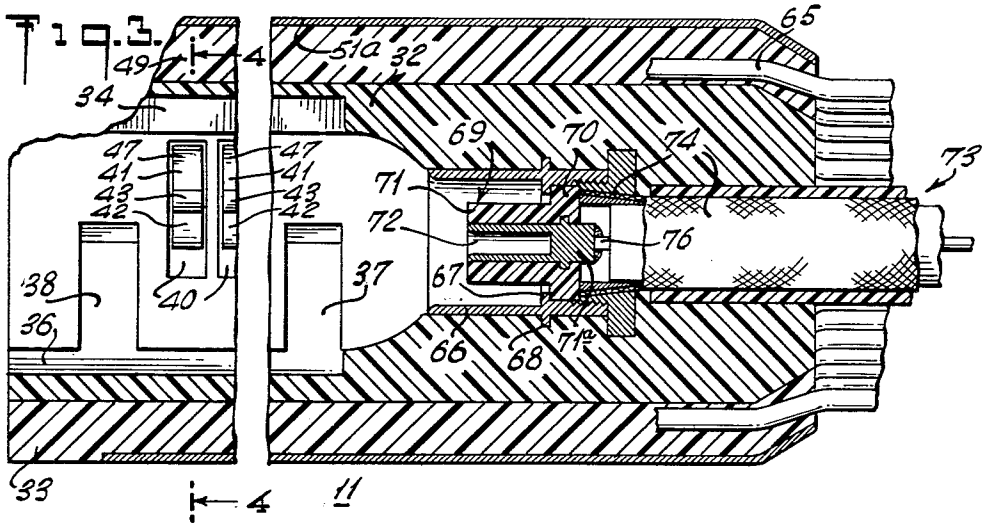

FIG. 4.

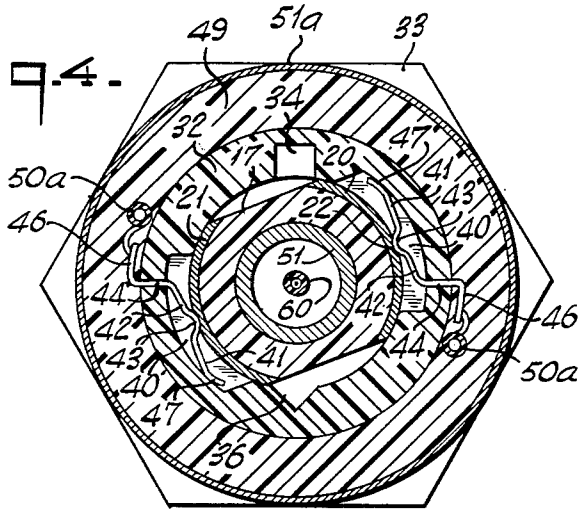

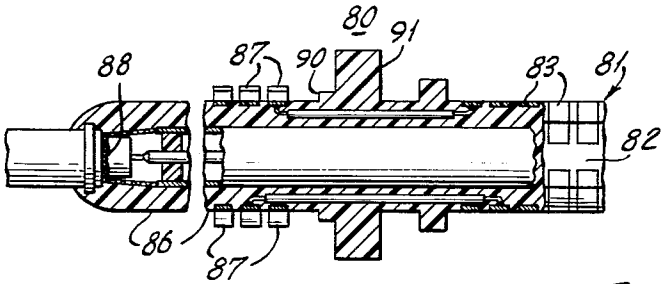

FIG. 6.

INVENTOR.
PAUL J. PLISHNER

BY
William R. Liberman

ATTORNEY

United States Patent Office 3,154,360 Patented Oct. 27, 1964

3,154,360 MULTI-CONDUCTOR COAXIAL ELECTRICAL CONNECTOR

Paul J. Plishner, Cavalry Road, Westport, Conn.

Filed Oct. 29, 1962, Ser. No. 233,606
11 Claims. (Cl. 339—88)

The present invention relates generally to improvements in electrical connector devices and it relates in particular to improved separable electrical connectors which permit the simultaneous coupling of common conductors which carry D.C. or low frequency currents and of coaxial cables which carry high frequency currents, or currents which require shielding or isolation.

The conventional manner of coupling electric stages and apparatus is by employing for the ordinary D.C. or low frequency current-carrying conductors a multi-element separable electrical connector including a plug member and a socket member, one of the connector members being provided with a plurality of contact-carrying wells or recesses and the other connector carrying a plurality of corresponding arranged upstanding metal pins or rods slidably registering with the respective recesses. A second type of separable electrical connector is also provided for the high frequency currents or currents which must be isolated or shielded, such currents being carried by a coaxial cable, the connector being of the well-known coaxial type. The above intercoupling arrangements possess many drawbacks and disadvantages. The intercoupling and decoupling procedures are often laborious and time consuming and the coupling devices are frequently damaged causing electrical malfunctioning and failure. Moreover, these arrangements are generally bulky and not satisfactorily miniatuarized. Insofar as the coupling of D.C. and low frequency carrying conductors are concerned, the multiconductor electrical connector disclosed in U.S. Patent No. 3,001,167, granted September 19, 1961 to James B. Chesnutt and Paul J. Plishner, is highly suitable. However, with the aforesaid connector, a separate connector is required for the coaxial cables, with its attendant drawbacks.

It is, therefore, a principal object of the present invention to provide an improved electrical connector device.

Another object of the present invention is to provide an improved electrical connector device for simultaneously effecting a coupling to a plurality of conductor lines and a coaxial cable.

Still another object of the present invention is to provide an improved composite multiple contact, coaxial cable electrical connector which can be subjected to great miniaturization.

A further object of the present invention is to provide an improved electrical connector of the above nature characterized by its simplicity and ease of employment, ruggedness, durability and reliability.

The above and other objects of the present invention will become apparent from a reading of the following description taken in conjunction with the accompanying drawings, wherein:

FIGURE 1 is a perspective view of an electrical connector embodying the present invention and illustrated in an uncoupled condition;

FIGURE 2 is a medial longitudinal sectional view of the plug section thereof;

FIGURE 3 is a fragmentary medial longitudinal sectional view of the socket section thereof;

FIGURE 4 is a sectional view taken along line 4—4 in FIGURES 2 and 3, the plug and socket sections being illustrated in intercoupled condition;

FIGURE 5 is an exploded perspective view of a modified form of the present invention; and

FIGURE 6 is a fragmentary sectional view taken along line 6—6 in FIGURE 5.

In a sense the present invention contemplates the provision of an electrical connector comprising a socket member having a cavity formed therein, a plurality of longitudinally spaced and mutually insulated contact elements disposed within said cavity, a mating plug member slidably registering with said cavity between advanced and retracted positions and having a leading end directed toward the base of said cavity, a plurality of longitudinally spaced, mutually insulated second contact elements disposed along said plug member, means maintaining a predetermined angular orientation between said plug and socket members during relative sliding coupling thereof and permitting relative rotation thereof when said plug member has been inserted to the maximum depth permitted by said socket member, said first and second contact elements being maintained out of engagement during sliding coupling of said plug and socket members by said means for maintaining the predetermined orientation and in engagement upon rotation from said predetermined relative orientation to a closed contact position, and separable, engageable conductor collar members and conductor pin elements coaxial with and mounted at the leading end of said plug member and at the base of said cavity and defining a coaxial connector, said coaxial connector being in a coupled condition when said plug is in its cavity-advanced position.

According to a preferred form of the present invention, the plug member includes a cylindrical shank having diametrically opposite longitudinally extending flats, the contact elements thereon being defined by longitudinally spaced, transversely extending arcuate conductor strips embedded in the shank and coplanar with the curved surfaces thereof. Two opposite longitudinally extending sets of the such contact elements are provided, each set being disposed between the flats. A coaxial conductor collar and pin project forwardly of the leading end of the shank and are connected respectively to a tubular conductor and a coaxial conductor housed in the shank. The contacts and the collar and pin are connected to corresponding conductors and a coaxial line or, alternatively, there is provided a post directed coaxially rearwardly of the shank and carrying connector lugs and a coaxial connector which is connected respectively to the said contact elements, and the collar and pin. The socket member includes a body member having a longitudinally extending, cylindrical cavity formed therein, at the base of which is mounted a coaxial collar and sleeve and is slidably engageable with the plug mounted collar and pin. The first contact elements are defined by resilient contacts disposed in recesses formed in the face of the socket member cavity and corresponding in location to the second contact members. The orienting means includes at least one longitudinally extending groove formed in the cavity face of one of said socket and plug members and a protuberance corresponding in shape to the cross-section of the respective groove and located at the leading and trailing ends of the other of said plug and socket members. Each longitudinal groove joins adjacent to its leading and trailing end a circumferentially extending groove of limited length.

Referring now to the drawings, and more particularly to FIGURES 1 to 4 thereof which illustrate a preferred embodiment of the present invention, the improved electrical connector includes a plug or male member **10** and a socket or female member **11**. Plug **10** is formed of an insulating material such as thermoplastic or thermosetting resin and includes a longitudinally extending tubular shank **13** having a tapered frusto-conical leading end **14** and provided at its trailing end with an enlarged head **15** which defines a finger manipulating piece.

Shank 13 is of substantially circular transverse cross-section and is provided with diametrically opposite longitudinally extending flat surfaces 17 extending from the tip 14 thereof to a point short of the head 16, flats 17 being closer to the axis of the shank 13 than the remaining arcuate peripheral surface thereof.

Located on one of the arcuate surfaces of shank 13 adjacent tip end 14 are a pair of longitudinally spaced upright projections 18 having substantially parallel side walls, the forward projection being immediately posterior to the leading end 14 of the shank 13 and the rear projection being just forward of plug head 16. On the opposite arcuate surface of the shank 13 there may be located longitudinally spaced prismatic projections 19 which are diametrically opposite to the respective projections 18.

A set of longitudinally spaced and longitudinally aligned arcuate metal contact elements 20 are embedded in shank 13 along one of the arcuate peripheral surfaces thereof. The contact elements 20 extend circumferentially for less than 180° and their outer surface is coplanar with the arcuate peripheral surface of the shank 13 and their edges coplanar with flats 17. Another set of longitudinally spaced, longitudinally aligned arcuate contact elements 21 are provided, laterally aligned with the first set, the outer surfaces of elements 21 being coplanar with the arcuate surface of shank 13, the end edges of corresponding pairs of contact elements 20 and 21 being laterally spaced from each other. Formed in the outer surface of each of the contact elements 20, 21 intermediate the ends thereof is an arcuate recess 22.

Connected to each of contact elements 20 and 21 is an insulator covered conductor 23, the end of which is soldered to a corresponding contact element, the conductors 23 being disposed along the inner peripheral base of shank 13 and extending longitudinally through the trailing end thereof.

Housed in and coaxial with shank 13 is a tubular metal conductor or sheath 50 which projects through the leading end of the shank 13, the insulated conductors 23 being sandwiched between the confronting faces of shank 13 and the tubular conductor 50. The leading end or section 51 of the tubular conductor is longitudinally slit and delineated from the remainder thereof by inwardly and outwardly directed peripheral flanges respectively, flange 53 registering with a mating peripheral groove formed in the inner face of shank 13 to lock the conductor 50 against longitudinal movement. The leading section 51 defines the collar or sleeve of a coaxial coupler 55 and has nested therein and extending for the length thereof an insulator plug 54 having an inner face bearing on the forward face of the flange 52 and a stepped coaxial bore including a forwardly directed enlarged section 56 and a rear section of small diameter separated therefrom by an intermediate bore section. A coupling pin 57 is located within and is coaxial with the enlarged bore 56 and terminates in a rearwardly directed tube 58 engaging the small diameter bore, the tube 58 and pin 57 being separated by an annular flange 59 registering with the plug bore intermediate section. An insulator covered conductor 60 has an uncovered leading end projecting into and soldered into pin tube 58 and extends rearwardly therefrom coaxial with the tube conductor 50. Coaxial conductor 60 is supported in tube 50 by a pair of insulator sleeves 61 housed in the tube 50 at its trailing end and at an intermediate section and engaging the axial conductor insulation. The conductor 60 may define the bore conductor of a coaxial cable 63, the braided sheath 64 of which is soldered to the trailing end of the tube 50, the cable 63 having an insulating cover and extending rearwardly of the plug 10.

The female or socket member 11 includes a longitudinally extending inner shell 32, preferably formed of an insulating plastic material in any well known manner and having at its trailing end an enlarged head 33 of

hexangonal cross-section. A pair of oppositely disposed longitudinally extending grooves 34 and 36 respectively are formed in the inner face of the shell 32 and extend from the open trailing end thereof to a point short of the leading end. Groove 34 is of channel-shaped transverse cross-section corresponding in shape to the plug protuberance 18, and the groove 36 is of triangular transverse cross-section corresponding in shape to the plug protuberance 19, to permit sliding engagement between the corresponding grooves and plug protuberances and permitting sliding engagement between the plug and socket only at a predetermined orientation or polarization when the protuberances 18 and 19 register with the grooves 34 and 36.

The grooves 34 and 36 (at their leading end) terminate in and communicate with circumferentially extending channel-shaped grooves as 37 (FIG. 1) which extend approximately 90° clockwise as viewed forwardly from end 33. Also formed in the inner face of the shell 32 in the neighborhood of the head portion 33 are a pair of oppositely disposed channel-shaped circumferential grooves as 38 which extend clockwise from each of the longitudinal grooves 34 and 36 for approximately 90°. The longitudinal spacing between grooves 37 and 38 is equal to the longitudinal spacing between the plug protuberances 18 and 19. Thus, plug 10 may be inserted into socket 11 upon proper polarization, and following the full insertion of the plug within the socket the plug may be rotated clockwise 90°, as viewed from the open end of the socket, the protuberances 18 and 19 engaging and locking in grooves 37 and 38.

Formed in the inner face of the inner shell 32 are two diametrically opposed longitudinal sets of circumferentially extending channel-shaped recesses 40 which are disposed between grooves 34 and 36. The center spacing between successive recesses 40 is substantially the same as the spacing between successive plug contact elements 20 or 21, and the recesses 40 of the opposite sets are laterally aligned. Disposed in each of recesses 40 is a contact element 41 formed of a resilient strip of metal. Each contact element 41 includes a curved section 42 having its convex portion directed inwardly towards the axis of shell 32 and provided with a centrally facing protuberance 43 adapted to engage recess 22 formed in the corresponding plug contact element 20 or 21. Radially projecting arm 44 extends from one end of the contact element curved portion 42 through the wall of inner shell 32 and terminates in a circumferentially extending lug 46 which is substantially super-imposed upon the outer wall of inner shell 32. The free end of contact element curved portion 42 is oppositely bent, as at 47, and bears against the base of the corresponding recess 40. The crown of the contact element convex portion 42, as well as the protuberance 43, project inwardly of the inner cylindrical wall of the shell 32 when in normal unstressed condition. The contact elements 20, 21 and 41 may be formed of any suitable conducting material such as brass or the like and are preferably electroplated in accordance with conventional practice with palladium or other suitable metal to provide greater corrosion- and abrasion-resistance and a better electrical contact surface.

An intermediate cylindrical shell 49 is formed of an insulating material such as a plastic material, and may be integrally formed with the inner shell 32 or firmly adhered thereto. Lugs 46 of the contact elements 41 are embedded in the intermediate shell 49 and are connected to insulator covered conductors 50*a* which are also embedded in the intermediate shell 49 and extend longitudinally in the wall of the shell through the leading end thereof. It should be noted that the insulation covering 50*a* as well as that covering conductors 23 associated with the connector plug member may be color coded in the well-known manner. A tubular metal shell 51*a* tightly engages the intermediate shell 49, the leading edge thereof being inwardly inclined to engage the correspond-

ing beveled surface of said intermediate shell, as in FIG. 3.

Embedded in the base or leading end of the shell **32** is an inwardly directed coaxial coupling member **65** which is the mate of the plug carried coaxial coupling member **55** and includes a metal collar member **66**. Located rearwardly of the base end of the collar **66** and formed integrally therewith are inwardly and outwardly directed peripheral flanges **67** and **68** respectively; flange **68** registering with a corresponding groove formed in shell **32**. A longitudinally bored insulator core **69** is coaxial with collar **66** and includes a trailing circular head **70** which abuts the leading face of flange **67** and the inner face of the leading section of the collar **66** and a cylindrical trailing section **71***a* spaced from the inner face of the collar **66**. A coaxial metal pin socket **71** is embedded in the bore of insulator core **69** and is provided with a rearwardly directed well **72**. An insulator covered coaxial cable **73** projects through the shell **32** and includes a braided metal sheath **74** connected to collar **66** in the usual manner, and a coaxial conductor **76** soldered to the closed end of the pin socket **71**.

A suitable method of producing the present electrical connector is disclosed in the above-identified patent to Chesnutt et al., although other suitable methods of fabrication may be employed.

In coupling the plug and socket member, plug **10** is aligned with and oriented relative to socket member **11** so that the protuberances **18** and **19** engage the longitudinal grooves **34** and **36** respectively. As plug **10** is slid into socket **11**, the flats **17** thereof confront the socket contact elements **41**, whereas the plug contact elements **20** and **21** do not engage the contact elements **41** but merely slide along the inner surface of the insulating shell **32**. When plug **10** is fully inserted in socket **11**, the coaxial coupling member **55** is in engagement with the coaxial coupling member **65** and rotatable relative thereto. The pin **57** is in contacting registry with the pin well **72** and collar **51** is in nesting contact with collar **66**.

In order to effect engagement between the contact plug elements **20** and **21** and the socket contact elements **41**, the plug is rotated clockwise, as seen in FIG. 4. In this latter position, the plug and socket are in coupled contact closed position. As plug **10** is rotated relative to socket **11**, the plug contact elements are conveyed along the socket contact elements **41** resiliently urging the latter forwardly until the contact recesses **22** are in registry with the contact protuberances **43**, in which position and the plug and socket are in contact closed position.

The reverse procedure is followed in effecting a contact open position and subsequently uncoupling the plug from the socket.

In FIGS. 5 and 6 of the drawing, there is illustrated another embodiment of the present invention differing from that above described primarily in that a contact post is provided on the plug member for facilitating the connections thereto, it being understood that such expedient may be employed with the socket member as well. Specifically, plug member **80** comprises a leading coupling section **81** similar in construction to plug member **10** as above described, including a shank **82** carrying the contact elements **83** and a coaxial coupling member **84** in the manner earlier described. Coaxial with and projecting rearwardly from the trailing head end of the shank **82** is a tubular post **86**, along the length of which is mounted a plurality of longitudinally and circumferentially spaced metal connector ears or lugs **87** provided with arms which project through the wall of the post **86** into the interior thereof. Each of the contact elements **83** is electrically connected to a respective lug **87** by a corresponding conductor extending along the interior of shank **82** and post **86**. A coaxial cable **88** extends through post **86** and out of its trailing end and is connected to the coaxial coupling member **84** in the manner earlier described. It should be noted that in the alternative, a coaxial coupling member may advantageously be mounted in the trailing end of the post **86** and connected to the coaxial coupling member **84**.

An open ended tubular housing **89** is provided and has at least its inner face formed of an insulating material. The housing **89** is slidable over post **86** with its peripheral wall radially spaced therefrom, the leading inner border of the housing **89** separably snugly engaging an annular shoulder **90** formed on the trailing face of the plug head **91**. Insulation covered conductors **92** have their ends soldered or otherwise connected to corresponding lugs **87** and together with the coaxial cable **88** extend through the trailing opening of the housing **89** and are connected as desired. Plug **80** may be employed with socket **11** as earlier described or with a socket member modified in the manner of plug member **80**.

While there have been described and illustrated preferred embodiments of the present invention, it is apparent that numerous alterations, omissions and additions may be made without departing from the spirit thereof.

Having now described my invention, what I claim and desire to secure by Letters Patent is:

1. An electrical connector comprising a socket member having an elongated longitudinally extending cavity formed therein, a plurality of longitudinally spaced mutually insulated first contact elements disposed within said cavity, a mating plug member slidably registering with said cavity between advanced and retracted positions and having a leading end directed toward the base of said cavity, a plurality of longitudinally spaced, mutually insulated second contact elements disposed along said plug member, means maintaining a predetermined angular orientation between said plug and socket members during relative sliding thereof and permitting relative rotation thereof at said plug member advanced position, said first and second contact elements being out of engagement at said predetermined orientation and in engagement upon rotation in a single predetermined sense from said predetermined relative orientation to a closed contact position, and separable engagable conductor collar members and conductor pin elements coaxial with and mounted at the leading end of said plug member and at the base of said cavity and defining a coaxial connector, said coaxial connector being in a coupled condition when said plug is in its cavity advanced position .

2. The electrical connector of claim 1 wherein one of said collar members nests in the other of said collar members when said plug is in said advanced position.

3. The electrical connector of claim 1 wherein one of said pins has a longitudinal bore formed therein which engages said other pin when said plug is in its advanced position.

4. An electrical connector in accordance with claim 1, including a plurality of longitudinally aligned sets of said longitudinally spaced second contact elements and a corresponding plurality of longitudinally aligned sets of said first longitudinally spaced contact elements wherein the peripheries of said sets of second contact elements are of arcuate configuration extending circumferentially of the plug member for less than 360° and in a straight line, lengthwise of the connector.

5. An electrical connector in accordance with claim 1, wherein said socket member includes a well portion defined by a cylindrical wall, the inner surface thereof having longitudinally spaced recesses formed therein, said first contact elements being located in said recesses and normally projecting above the upper edges thereof and being resiliently inwardly urged by said second contact elements during engagement therewith, and including lugs connected to said first contact elements and projecting through said cylindrical wall.

6. The electrical connector of claim 1 wherein said orienting means is defined by at least one longitudinally extending groove formed in one of said connector mem-

bers and at least one slidably engaging protuberance mounted on the other of said members.

7. The electrical connector of claim 6 wherein each of said longitudinally extending grooves terminates in a circumferentially extending groove disposed forward of the leading of said contact elements.

8. An electrical connector comprising a socket member having an elongated, longitudinally extending cavity formed therein, a plurality of longitudinally-spaced mutually insulated first contact elements disposed within said cavity, a mating plug member slidably registering with said cavity between advanced and retracted positions and having a leading end directed toward the base of said cavity, a plurality of longitudinally-spaced, mutually insulated second contact elements disposed along said plug member, means maintaining a predetermined angular orientation between said plug and socket members during relative sliding thereof and permitting relative rotation thereof at the advanced position of said plug member, said first and second contact elements being out of engagement at said predetermined orientation and in engagement upon rotation from said predetermined relative orientation to a closed contact position, separable engagable first and second collar members and first and second pin elements coaxial with and mounted at the leading end of said plug member and at the base of said cavity respectively and defining a coaxial connector, said coaxial connector being in a coupled condition when said plug is in its cavity-advanced position, a tubular conductor member housed in and extending coaxially longitudinally along said plug member and connected to said plug mounted collar and a longitudinally-extending conductor

coaxial with said tubular conductor member and connected to said plug mounted pin.

9. The electrical connector of claim 8 including mutually insulated leads disposed within said plug member extending through the outer end of said plug member and longitudinally along the outer face of said tubular conductor and connected to respective of said second contact elements.

10. The electrical connector of claim 8 including an insulator post affixed to and projecting rearwardly from said plug member, said tubular conductor member extending rearwardly through said insulator post, a plurality of spaced terminal elements mounted on said post, and mutually insulated leads extending longitudinally along the outer face of said tubular conductor member and connecting said terminal elements to respective of said second contact elements.

11. The electrical connector of claim 10 including a coaxial connector member located at the free end of said post and connected to said plug mounted collar and pin.

References Cited by the Examiner

UNITED STATES PATENTS

2,434,534	1/48	Alford	339—190 X
2,461,268	2/49	Goldfield	339—177
2,594,004	4/52	Farish	339—188 X
2,870,420	1/59	Malek	339—177 X
3,001,167	9/61	Chesnutt et al.	339—91 X

JOSEPH D. SEERS, *Primary Examiner.*