Feb. 20, 1951 S. DUBIN 2,542,757

CENTRIFUGAL CASTING MACHINE

Filed April 9, 1948 2 Sheets-Sheet 1

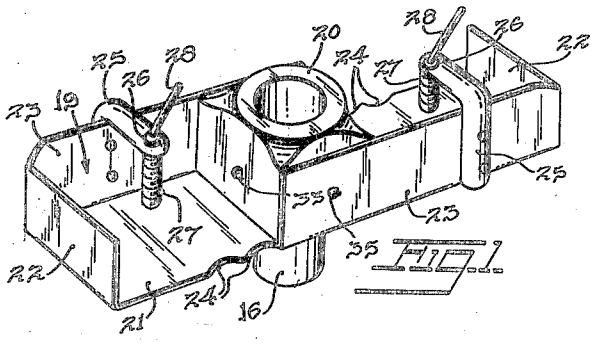

FIG. 1

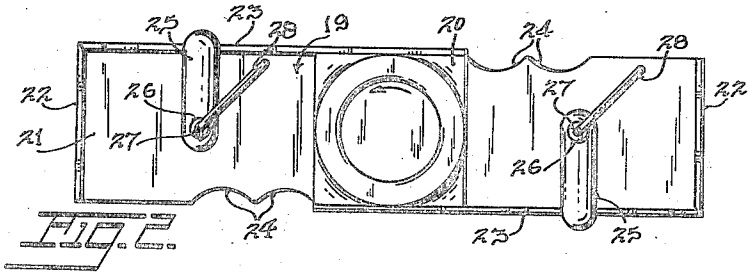

FIG. 2

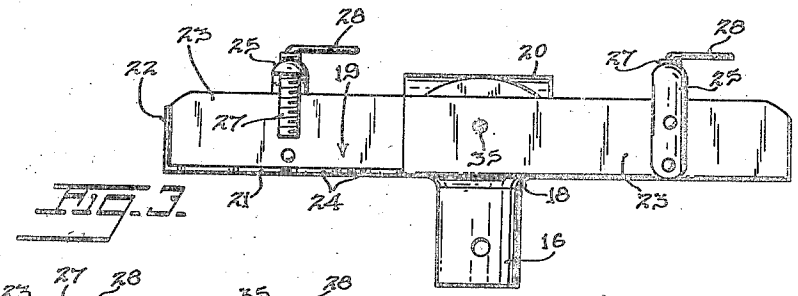

FIG. 3

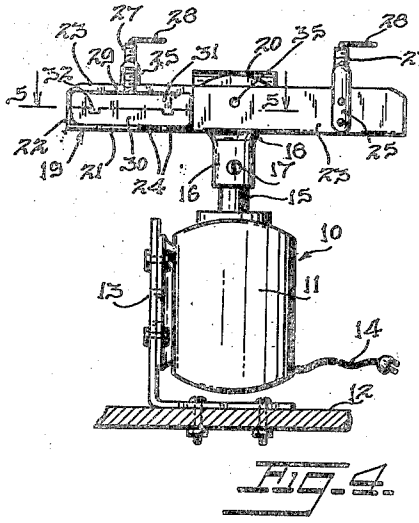

FIG. 4

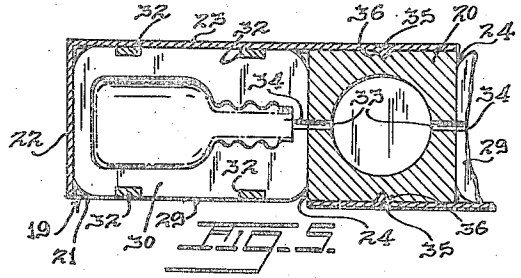

FIG. 5

INVENTOR.
SOL DUBIN
BY
ATTORNEY

Feb. 20, 1951 S. DUBIN 2,542,757

CENTRIFUGAL CASTING MACHINE

Filed April 9, 1948 2 Sheets-Sheet 2

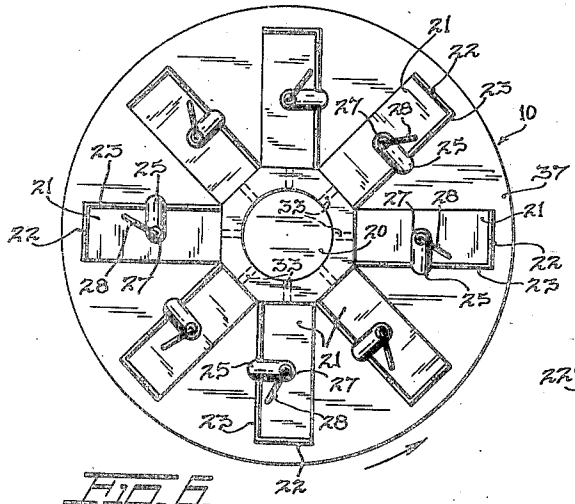

Fig. 6.

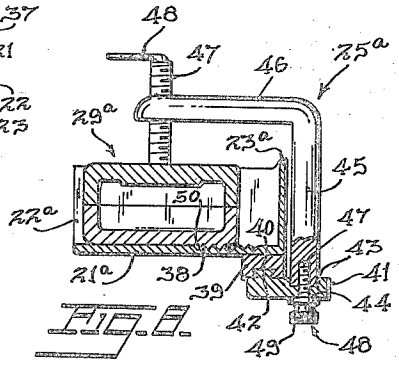

Fig. 8.

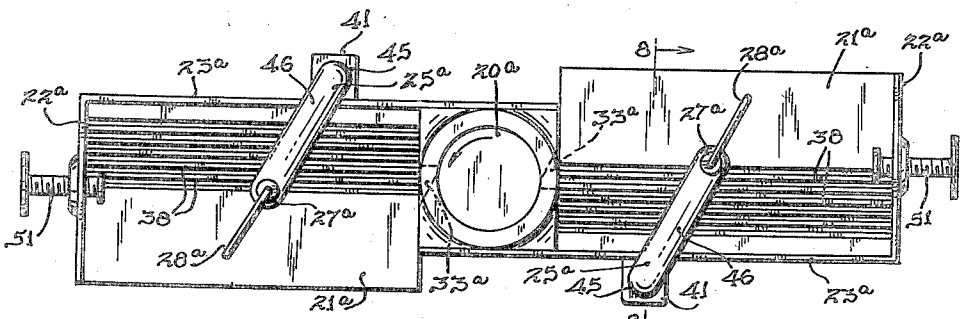

Fig. 7.

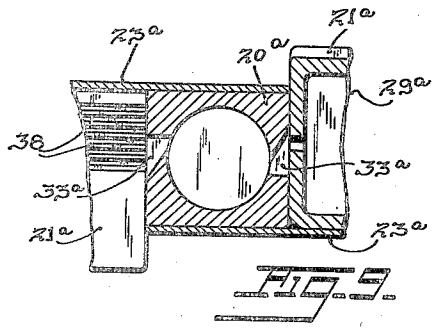

Fig. 9.

INVENTOR.
SOL DUBIN

BY

ATTORNEY.

Patented Feb. 20, 1951

2,542,757

UNITED STATES PATENT OFFICE

2,542,757

CENTRIFUGAL CASTING MACHINE

Sol Dubin, New York, N. Y., assignor to Dusarge Design Corp., New York, N. Y.

Application April 9, 1948, Serial No. 20,127

9 Claims. (Cl. 18—26)

1

This invention relates to a centrifugal casting machine, and more particularly to a machine of the above type having a central crucible for receiving hot wax, and radial mold supporting arms.

An object of the present invention is to provide a rotary centrifugal casting machine having a crucible which is rotated by an electric motor, or any other driving means, the crucible being at the center of radial mold supporting arms, on which molds are secured, the molds and crucible having connecting passages for molten material which is deposited in the crucible and which moves, by centrifugal force, through the passages into the molds.

A further object is to provide a device as aforesaid, in which the molds are adjustably disposed so that different size molds can be supported on the arms.

Another object is to provide means for limiting the movement of the molds to prevent inadvertent vertical, longitudinal and lateral movements.

For further comprehension of the invention, and of the objects and advantages thereof, reference will be had to the following description and accompanying drawings, and to the appended claims in which the various novel features of the invention are more particularly set forth.

In the accompanying drawings forming a material part of this disclosure—

Fig. 1 is a perspective view of the rotary structure of a machine constructed in accordance with this invention.

Fig. 2 is a plan view of Fig. 1.

Fig. 3 is a side elevation of Fig. 2.

Fig. 4 is a side view of the machine, with molds in place.

Fig. 5 is an enlarged section on the line 5—5 of Fig. 4.

Fig. 6 is a plan of a modified form of rotary structure constructed in accordance with another embodiment of this invention.

Fig. 7 is a view, similar to Fig. 2, of a rotary structure constructed in accordance with a further modification of this invention.

Fig. 8 is an enlarged section on the line 8—8 of Fig. 7.

Fig. 9 is an enlarged fragmentary sectional view looking down, the section being taken through the crucible ports.

The centrifugal casting machine 10, according to this invention, comprises an electric motor 11 which is mounted on a table 12 or other support by a bracket 13. The electric motor can be connected to any available source of power supply by the cord 14. Its shaft 15 is vertically disposed and receives a hub 16, the hub 16 being secured to the shaft by a set screw 17. If desired, the motor may be horizontal and geared to the hub 16 with any desired speed ratio.

2

The hub is welded at 18 to a thin metal platform 19 which supports a crucible 20. The crucible 20 is square outside, but has a circular interior concentric with the shaft 15. The platform extends on opposite sides of the crucible radial thereto, the platform thus consisting of two radial arms. Each arm has a bottom wall 21, an end wall 22 and a rear wall (rear as to direction of rotation) 23. The rear wall is higher than the end wall. The bottom wall has finger nitches 24 close to the crucible. Since the walls 23 are rear as to the counterclockwise direction of rotation of the crucible, the walls 23 are not in a line but are diagonally opposite. An L-shaped bracket 25 is secured with its vertical leg riveted to the rear face of the wall 23 and with its horizontal leg extending transversely across the center of the wall 21. Each horizontal leg is above the top of the wall 23 adjacent thereto. At its forward end, the horizontal leg has a threaded orifice 26 in which is a set screw 27 having an operating arm 28 welded to its top end face.

A two part mold 29 is disposed in each radial arm of the platform 19. Each mold has a bottom part 30 and a top part 31 having interlocking grooves and notches 32. The mold substantially fills the space of the arm, that is, the bottom part 30 is only slightly smaller (working clearance) than the bottom wall 21. The crucible has, along its longitudinal center line, outlet ports 33 which line with ports 34 in the molds. Ports 34 are half in the bottom and half in the top parts of the mold. After the two molds are placed in the arms, they are moved into tight engagement with the crucible with the ports 33 and 34 in alignment. The screw 27 associated with each arm is then tightened against the adjacent mold, holding the mold tightly to the crucible. The crucible and mold having large-area engaging faces, preventing leakage from the ports 33 laterally between the molds and crucible.

The crucible 20 is not integral with the rest of the structure but is secured to the walls 23. This can best be seen from Figs. 3 and 5. The crucible is squeezed between the overlapping portions of the walls 23 (Fig. 5) and each of these overlapping portions has a pressed tit 35 which fits in a socket 36 in the side of the crucible. The walls 23 prevent lateral movement of the crucible, the platform 19 supports the crucible, and

the tits 35 prevent longitudinal and vertical movement of the crucible.

In the operation of the mechanism, the molds are secured in place by turning the handles 28 of the screws 27, the motor is started up to rotate the molds, and the hot molten fluid, such as wax, is poured into the crucible. Centrifugal force forces the wax to flow through the bores 33 and 34 into the mold. The crucible may be heated if desired to prevent the hardening of the wax or the chilling of other molten fluids.

The embodiment of the invention shown in Fig. 6 is similar to that aforedescribed except that the number of radial arms has been increased, these arms being supported on a disc 37. Eight radial arms are shown for eight molds and accordingly the outside face of the crucible is octagonal rather than square. Parts corresponding to like parts of the first described embodiment of the invention are indicated by identical numerals.

The embodiment of the invention shown in Fig. 7 is adapted to receive several size molds, see Figs. 8–9. Essentially the structure is the same as in the embodiment of the invention shown in Figs. 1–5, but has added features. The ports 33^a of the crucible 29^a have round inner ends but have elongated outer ends, since the ports flare, the flare being all at one side. That is to say, at the rear side, each port 33^a is like port 33, but at the front side there is an acute flare, see Fig. 9. The upper face of the wall 21^a has longitudinal serrations 38 adjacent the rear wall 23^a. A longitudinal block 39 having a longitudinal dove-tail groove 40 is welded to the under side of the wall 21^a at the rear thereof, see Fig. 8. A carriage 41 slides longitudinally therein, the carriage having a tongue 42 in the groove 40. The carriage extends rearwardly of wall 23^a and has a cylindrical vertical socket 43 with one edge in line with wall 23^a. Below socket 43, and concentric therewith, is a bore 44 which is smaller than socket 43 and opens thereinto.

A rotatable bracket 25^a is secured in the socket 43, the bracket having a cylindrical vertical leg 45 in the socket, and a horizontal leg 46. Leg 45 has a threaded bore 47 at its bottom in line with bore 44. A screw 48 is threaded in bore 47, passing through bore 44 and having a large head 49 adapted to be tightened against the carriage 41.

A screw 27^a is threaded in the leg 46. The mold 29^a may be of several widths and lengths. Thus it must be adjusted in its respective arm. If the mold is of narrow width, it will be spaced from wall 23^a—see Fig. 8. If it is wide, it will contact wall 23^a, see Fig. 9. The bottom part 30^a of these molds each has serrations 50 adapted to align with serrations 38. The end walls 22^a are off center from the opposed end walls of the crucible, see Fig. 7, since the end walls 22^a have been extended to provide for large molds. At the center, the end wall 22^a has a set screw 51.

The operation of the device is as follows:

A mold is chosen. If it is so narrow that its port (port 34) would not line up with port 33^a, then it is spaced from the wall 23^a as shown in Fig. 8. If it is wide enough so that its port (port 34) would line up with port 33^a, it is placed in engagement with wall 23^a, see Fig. 9. In either event, the serrations engage and help to hold the mold from moving. If the mold is shorter than the arm, the screw 51 is turned into engagement with the adjacent end of the mold. Then the screw 27^a is brought down into engagement with the mold. The screw should engage the exact center of the mold as it did in the embodiment of Figs. 1–5. To this end, the carriage 41 can be slid longitudinally, and the leg 45 rotated, as shown in Fig. 7. Once the screw 27^a is centralized in regard to the mold, the screw 48 is tightened to prevent further rotating of the leg 45 and the screw 27^a is tightened. This prevents any tendency of the carriage to move in the dove-tail groove.

While I have illustrated and described the preferred embodiments of my invention, it is to be understood that I do not limit myself to the precise constructions herein disclosed and the right is reserved to all changes and modifications coming within the scope of the invention as defined in the appended claims.

Having thus described my invention, what I claim as new, and desire to secure by United States Letters Patent is:

1. A centrifugal casting machine comprising a horizontal platform having a center vertical hub, means for rotating said hub, a crucible on said platform over said hub, said platform having longitudinal vertical walls on opposite sides extending from opposite ends of said platform toward each other and overlapping at opposite sides of said crucible in engagement therewith, said platform having end walls, a bracket secured to each of said longitudinal walls and having a horizontal leg disposed over said platform, a mold on said platform at each side of said crucible, and a screw in each horizontal leg for holding said molds on said platform in engagment with said crucible, said crucible and molds having aligned ports for flow by centrifugal force of molten material from said crucible into said molds.

2. A centrifugal casting machine comprising a horizontal platform having a center vertical hub, means for rotating said hub, a crucible on said platform over said hub, said crucible having flat outer faces, said platform having longitudinal vertical walls on opposite sides extending from opposite ends of said platform toward each other and overlapping at opposite sides of said crucible at right angles with said flat faces, said platform having end walls, a bracket secured to each of said longitudinal walls and having a horizontal leg disposed over said platform, a mold on said platform at each side of said crucible, and a screw in each horizontal leg for holding said molds on said platform in engagement with said crucible, said crucible and molds having aligned ports for flow by centrifugal force of molten material from said crucible into said molds.

3. A centrifugal casting machine comprising a horizontal platform having a center vertical hub, means for rotating said hub, a crucible on said platform over said hub, said crucible having flat faces in line with the longitudinal edges of said platform, said platform having longitudinal vertical walls on opposite sides extending from opposite ends of said platform toward each other and overlapping at opposite sides of said crucible in engagement with said flat faces, said platform having end walls, a bracket secured to each of said longitudinal walls and having a horizontal leg disposed over said platform, a mold on said platform at each side of said crucible, and a screw in each horizontal leg for holding said molds on said platform in engagement with said crucible, said crucible and molds having aligned ports for flow by centrifugal force of molten material from said crucible into said molds.

4. A centrifugal casting machine comprising a horizontal platform having a center vertical hub, means for rotating said hub, a crucible on said platform over said hub, said crucible having flat faces in line with the longitudinal edges of said platform, said platform having longitudinal vertical walls on opposite sides extending from opposite ends of said platform toward each other and overlapping at opposite sides of said crucible in engagement with said flat faces, tits and sockets in said flat faces and overlapping portions of said vertical walls securing said crucible to said vertical walls, said platform having end walls, a bracket secured to each of said longitudinal walls and having a horizontal leg disposed over said platform, a mold on said platform at each side of said crucible, and a screw in each horizontal leg for holding said molds on said platform in engagement with said crucible, said crucible and molds having aligned ports for flow by centrifugal force of molten material from said crucible into said molds.

5. A centrifugal casting machine comprising a horizontal platform having a center vertical hub, an electric motor rotating said hub, a crucible on said platform over said hub, said crucible having flat faces in line with the longitudinal edges of said platform, said platform having longitudinal vertical walls on opposite sides extending from opposite ends of said platform toward each other and overlapping at opposite sides of said crucible in engagement with said flat faces, tits and sockets in said flat faces and overlapping portions of said vertical walls securing said crucible to said vertical walls, said platform having end walls, a bracket secured to each of said longitudinal walls and having a horizontal leg disposed over said platform, a mold on said platform at each side of said crucible, and a screw in each horizontal leg for holding said molds on said platform in engagement with said crucible, said crucible and molds having aligned ports for flow by centrifugal force of molten material from said crucible into said molds.

6. A centrifugal casting machine comprising a rotatable platform having horizontal radial seats each provided with a rear longitudinal vertical wall and an end wall at right angles thereto, a central crucible, an arm extending over each of said seats, a screw extending vertically through each of said arms, and a mold on each of said seats in contact with said crucible and the adjacent screw, said crucible and molds having mating passages, said vertical walls overlapping said crucible, said crucible and overlapping portions of said vertical walls having coacting tits and sockets holding said crucible to said platform.

7. A centrifugal casting machine comprising a rotatable platform having horizontal radial seats each provided with a rear longitudinal vertical wall and an end wall at right angles thereto, serrations in the top face of said seats extending longitudinally thereof, a set screw in each of said end walls, a central crucible, an arm extending over each of said seats, a screw extending vertically through each of said arms, said arms being each pivotally mounted on a longitudinally sliding carriage suported by said seats, means for locking said arms in angular positions, and a mold on each of said seats having serrations mating with said seat serrations, each mold contacting with said crucible and the adjacent screws, said crucible and molds having mating passages.

8. A centrifugal casting machine comprising a rotatable platform having horizontal radial seats each provided with a rear longitudinal vertical wall and an end wall at right angles thereto, serrations in the top face of said seats extending longitudinally thereof, a set screw in each of said end walls, a central crucible, an arm extending over each of said seats, a screw extending vertically through each of said arms, said arms being each pivotally mounted on a longitudinally sliding carriage supported by said seats, means for locking said arms in angular positions, and a mold on each of said seats having serrations mating with said seat serrations, each mold contacting with said crucible and the adjacent screws, said crucible and molds having mating passages, said crucible passages being horizontally elongated.

9. A centrifugal casting machine comprising a horizontal platform having a center vertical hub, means for rotating said hub, a crucible on said platform concentrically over said hub, said platform having longitudinal vertical walls on opposite sides extending from opposite ends of said platform toward each other and overlapping at opposite sides of said crucible in engagement therewith, said platform having end walls, brackets mounted to rotate with said platform and having horizontal legs disposed over said platform on opposite sides of said crucible, a mold on said platform at each side of said crucible, and a screw in each horizontal leg for holding said molds on said platform in engagement with said crucible, said crucible and said molds having aligned ports for flow by centrifugal force of molten material from said crucible into said molds.

SOL DUBIN.

REFERENCES CITED

The following references are of record in the file of this patent:

UNITED STATES PATENTS

Number	Name	Date
1,195,803	Gardner	Aug. 22, 1916
2,140,204	Griffin	Dec. 13, 1938
2,378,942	Sorensen et al.	June 12, 1945
2,385,631	Levinson	Sept. 25, 1945