Nov. 18, 1952 J. ASHMEAD 2,618,777

RADIO TRANSMISSION AND RECEPTION

Filed July 31, 1947

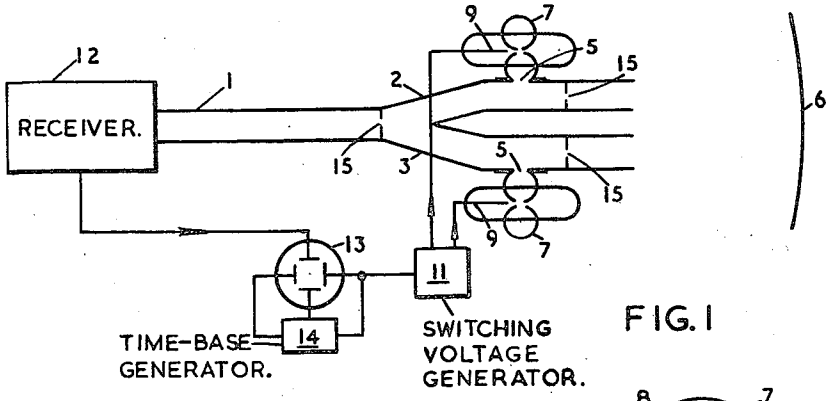

FIG. 1

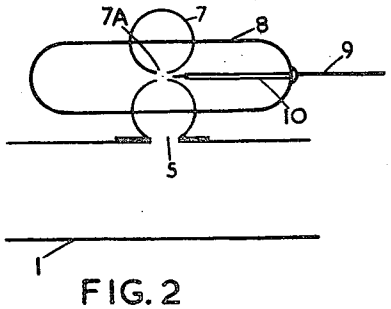

FIG. 2

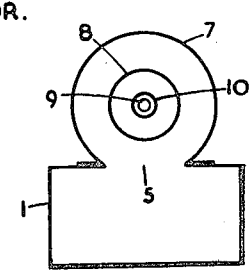

FIG. 3

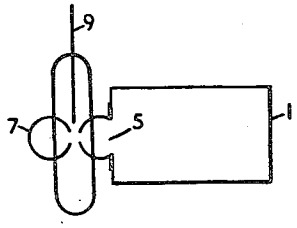

FIG. 4

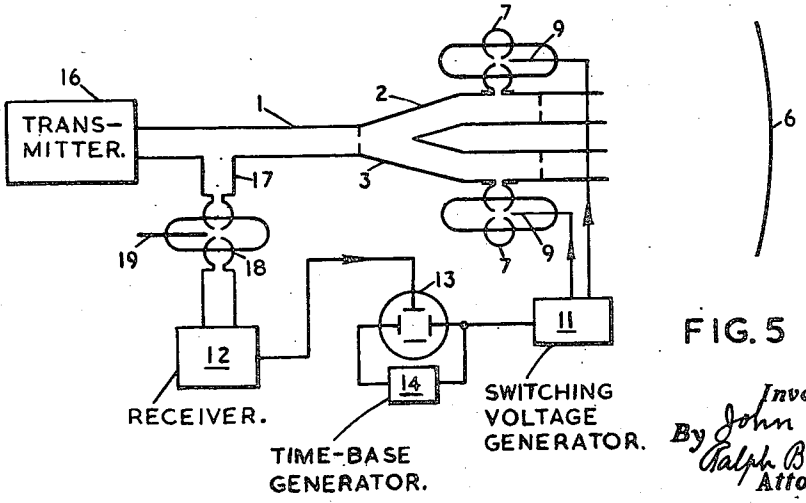

FIG. 5

Inventor
John Ashmead
By Ralph B. Stewart
Attorney

Patented Nov. 18, 1952 2,618,777

UNITED STATES PATENT OFFICE

2,618,777

RADIO TRANSMISSION AND RECEPTION

John Ashmead, Cambridge, England, assignor to Minister of Supply, in His Majesty's Government of the United Kingdom of Great Britain and Northern Ireland, London, England

Application July 31, 1947, Serial No. 765,005
In Great Britain August 27, 1943

Section 1, Public Law 690, August 8, 1946
Patent expires August 27, 1963

8 Claims. (Cl. 343—16)

1

The present invention relates to short wave signalling installations of the kind in which the aerial system includes a waveguide, which may be used as a feeding device to or from a reflecting surface, or directly as a radiator or receiver of radio frequency energy.

An object of the present invention is to provide an improved method of switching a waveguide rapidly into or out of circuit with receiving or transmitting circuits of such an installation.

A requirement for such a switching operation exists, for example, in certain already proposed radiolocation systems. In one such system, the waveguide is connected to receiving circuits at one end, and at the other is forked to form two branches which are symmetrically disposed on either side of the focal point of a reflecting mirror; neon lamps are disposed in the branches, and striking voltages are applied to the lamps in each branch in rapid alternation, so that incoming signal energy is "split" between the two branches, flowing first through one and then through the other alternately, each branch being blocked when the neon lamps in it are struck by the application of the striking voltage. By splitting the incoming signal in this way and by comparing with the aid of a suitable indicator the amplitudes of the two components, the direction of arrival of the signal can be determined with a high degree of accuracy.

A further object of the invention is to provide an improved direction-finding system of this kind.

Another object of the invention is to provide a direction-finding aerial system of this kind which can be used for the transmission of the exploring signal as well as for the reception of the echo signal.

The invention comprises radiolocating apparatus provided with an aerial system which includes a waveguide coupled at one end to receiving circuits and forked at the other end into branches symmetrically disposed about the centre line of the system, wherein each branch is provided with a switching device which comprises a toroidal resonator tuned to the frequency of the system and coupled to the interior of the branch, and which includes in its structure a discharge gap enclosed in an envelope filled with ionizable gas or vapour, and wherein means are provided for generating recurrent switching impulses and for applying them alternately to each switching device in turn to excite the discharge and detune the resonator.

Rhumbatron switching devices of this kind are described in the specification of co-pending United States application Serial No. 766,494, filed August 6, 1947, and reference should be made to this specification for details of their construction (see also British Patent 589,023). This co-pending specification also describes one method

2

of employing them in which they are connected in series with a waveguide or transmission line, i. e. providing the resonator with input and output couplings enabling it to be interposed between two sections of a waveguide. The application of a switching voltage detunes the resonator and prevents the transmission of energy from the input section of the guide to the output section.

When employed according to the present invention for switching the two branches of a forked waveguide forming part of a receiving aerial system, they may be connected in series with the branches in this way, but according to a feature of the invention in such a switching device the resonator is provided with a single coupling aperture which registers with an aperture in the wall of the guide.

The invention therefore also comprises short wave signalling apparatus including a wave guide provided with a switching device which comprises a toroidal resonator tuned to the frequency of the apparatus and connected with the guide through an aperture in the wall of the guide, and which includes in its structure a discharge gap enclosed in an envelope filled with ionizable gas or vapour, wherein means are provided for applying from an external source switching voltages across the gap to excite the discharge and detune the resonator, thereby allowing signal energy to flow through the guide with little loss.

As mentioned in the specification of co-pending application Serial No. 766,494 the discharge can be excited not only by the application of an external striking voltage, but also by a signal of sufficient energy in the wave guide, which causes a voltage to build up across the gap sufficient to excite the discharge. Thus, if the resonator is connected to the guide as a series section thereof, signals of high energy content will be substantially prevented from passing the resonator, whilst signals of lower energy content will be able to pass with little loss. When the single aperture connection is employed, however, the reverse obtains, and signals of high energy content can flow past the aperture leading to the resonator with little loss of energy.

The invention further comprises radio locating apparatus provided with a common aerial system for the transmission of exploring pulses and the reception of echo pulses, including a waveguide coupled at one end to the transmitting and receiving circuits and forked at the other end into branches symmetrically disposed about the centre line of the system, wherein each branch is provided with a switching device arranged to respond to a voltage above a predetermined magnitude, derived wholly or in part from the energy in the exploring pulses and from an external source of periodic switching impulses, to permit the transmission of the exploring signal through

the branch with little loss and to permit the transmission of the echo pulse through the branch only during the persistance of a switching impulse, and wherein means are provided for applying the switching impulses to each device in turn, whereby the exploring signals can pass simultaneously through the branches whilst the echo signals can flow only through each branch in turn.

Thus, during transmission, the radiation polar diagram is symmetrical with respect to the geometrical axis of the aerial system and is unaffected by the switching impulses applied to the devices, whilst during reception, the incoming echo signal is "split" between the branches, enabling accurate determination of the direction of arrival of the signal to be achieved.

It is to be understood that the invention in any of its aspects does not exclude the use of a steady priming voltage applied to the switching devices, of a magnitude insufficient to cause the device to respond but sufficient to produce a response when combined with a switching voltage or with the voltage derived from the exploring pulse (which may themselves be insufficient alone to produce a response).

The invention will now be described by way of example with reference to the accompanying drawings in which

Fig. 1 is a diagram of a radio-location receiver employing a forked waveguide provided with aperture-connected switches;

Figs. 2 and 3 illustrate the switches and one mode of connecting them to the waveguide;

Fig. 4 illustrates an alternative mode of connecting a switch to the side of a waveguide; and

Fig. 5 is a diagram of a radio-location system incorporating the invention and employing a common aerial system for transmission and reception.

The invention will be described as applied to an aerial system comprising a reflector which is coupled to a wave-guide of rectangular cross-section, the system being adapted to the TE01 mode i. e. the H01 mode of propagation, i. e. the E-vector (electrical component of the wave energy) is transverse to the direction of propagation.

Referring to Figs. 1–3 there is shown a waveguide 1, of rectangular cross-section, the longer transverse dimension of the walls of the guide being perpendicular to the plane of the paper in Figs. 1 and 2. The wave-guide is branched to form two forks 2 and 3, which terminate with open apertures at points equidistant from the focal plane of a reflector 6. A rectangular aperture 5, having its shorter edge parallel to the length of the wave-guide is formed in one wall of each of the forks 2, 3. An aperture of similar size is formed in the outer periphery of the resonator 7, and is fitted with a flange which is attached to the wave-guide wall, so that the aperture in the resonator registers with the aperture 5 in the wall of the guide. The aperture 5 is so positioned that it interrupts a large proportion of the currents circulating in the wall of the guide, so that the radio frequency energy is radiated through the aperture and excites the resonator, which is tuned to the frequency of the incoming signal. So long as the resonator remains tuned to the frequency of the incoming wave, it prevents transmission of the wave beyond the coupling aperture.

The central zone of the resonator 7 is formed with an annular gap 7A, and is enclosed in a glass envelope 8 containing an ionizable gas or vapour. A striking electrode 9 held in a glass supporting tube 10 is arranged in close proximity to the gap, and serves to create a glow discharge across it when a suitable striking voltage is applied. During the discharge, the resonator 7 is detuned so that it now presents a high impedance to energy flowing through the aperture in the wave-guide, and low impedance to energy flowing across the aperture, whereby the original effect of the aperture is substantially nullified and the wave-guide is effectively switched into circuit.

In operation switching voltages at a suitable recurrence frequency, generated by a circuit 11, are applied to the priming electrodes of each of the resonators in rapid alternation, so that each of the two branches is successively brought into and out of circuit. Signals from the receiver 12 are presented on the screen of a cathode ray tube 13 against a time base generated by the circuit 14, and a shift voltage synchronous with the switching voltage is superimposed on the time-base voltage to separate the traces representing the signal received from each branch, so that their amplitudes can be compared.

The necessary matching reactances are provided by inserting iris diaphragms 15 in the waveguide and the branches at the positions shown in the drawing.

It is not essential that the resonator should be mounted on the wider face of the waveguide; it can be mounted on the narrower face as shown in Fig. 4. In this case the aperture 5 should be cut with its longer edge parallel to the length of the waveguide in order to interrupt the circulating currents to the maximum extent, and the resonator must be turned through 90° as shown in order that its slot will register with the aperture. In general, the aperture in the resonator must always be cut with its shorter edge lying in a cross-section of the toroid and its longer edge lying in a longitudinal section, as shown, whilst the aperture in the waveguide will be cut to effect the maximum interruption of the circulating currents. The resonator normally presents a high impedance to electromagnetic energy flowing through the guide. However, when the resonator is flashed it will present a low impedance to energy flowing through the waveguide, and the waveguide is effectively switched into circuit.

In Fig. 5 is shown the arrangement for use with a common aerial system for transmission and reception. The waveguide 1 is connected to a transmitter 16 and through a branch 17 to the receiver 12. This branch includes a suitable device for protecting the receiver against harmful voltages which would be produced by transmission of the powerful exploring pulse from the transmitter down the branch 17. This device can comprise a similar resonator connected as a series section in the branch 17 in the manner described in co-pending application Serial No. 766,494 such a resonator being indicated at 18. The energy in the exploring pulse is sufficient to produce a voltage across the spark-gap of 18 which when superimposed upon a suitable priming voltage applied to the electrode 19, causes the resonator to flash and become detuned, thereby blocking the branch 17. Received pulses, on the contrary, contain insufficient power to flash the resonator, which therefore remains in the tuned condition and

transmits the pulses with little loss of power to the receiver 12. During the transmission of each exploring pulse, the signal energy in the branches is sufficient to cause both resonators 7 to flash, so that the exploring pulses are radiated from both branches simultaneously with comparatively little loss of energy. During reception, in the intervals between the exploring pulses, the signal energy is insufficient to cause the resonators to flash, so that the switching impulses are effective in diverting the flow of incoming energy from one branch to the other at the switching frequency, as already described with reference to Fig. 1.

I claim:

1. Radiolocating apparatus provided with a common aerial system for the transmission of exploring pulses and the reception of echo pulses, including a waveguide coupled at one end to the transmitting and receiving circuits and forked at the other end into branches symmetrically disposed about the centre line of the system, an ionizable switching device for each branch of said guide arranged to respond to a voltage above a predetermined magnitude, derived in part from the energy in the exploring pulses to permit the transmission of the exploring pulse through the branch with little loss and to permit the transmission of the echo pulse through the branch only during the interval between exploring pulses, a source of switching pulses, and means for applying the switching impulses to each switching device in turn, whereby the exploring pulses can pass simultaneously through the two branches, whilst the echo signals can only flow through each branch in turn.

2. Apparatus according to claim 1 wherein each switching device comprises a toroidal resonator tuned to the frequency of the system and connected with a branch of the waveguide through an aperture in the wall of the guide, and includes in its structure a discharge gap having the space between its poles filled with ionizable gas or vapour, and wherein means are provided for applying the switching impulses to ionize the gas in the discharge gap of each device in turn.

3. Apparatus according to claim 2 employing a waveguide of rectangular cross-section and adapted to a mode of propagation in which the direction of the electric component of wave energy is transverse to the direction of propagation, wherein the outer wall of the toroidal resonator is provided with a rectangular aperture having its shorter dimension lying in a cross-section of the toroid, this aperture registering with a similar aperture in the wider face of the guide cut with its shorter dimension parallel to the length of the guide.

4. Apparatus according to claim 2 employing a waveguide of rectangular cross-section and adapted to a mode of propagation in which the direction of the electric component of wave energy is transverse to the direction of propagation, wherein the outer wall of the toroidal resonator is provided with a rectangular aperture having its shorter dimension lying in a cross-section of the toroid, this aperture registering with a similar aperture in the narrower face of the guide cut with its longer dimension parallel to the length of the guide.

5. Short wave signalling apparatus including a waveguide for transmitting waves of a given frequency, a switching device for controlling the transmission of waves through said waveguide comprising a toroidal resonator tuned to said frequency and provided with a single coupling aperture having direct coupling with an aperture in the wall of the guide whereby said tuned resonator normally prevents the transmission of said waves through said guide of a magnitude less than a predetermined value, said resonator including in its structure a discharge gap having the space between its poles filled with ionizable gas or vapour, said gas or vapour filling being ionizable by the energy of said waves when the magnitude of said waves exceeds said predetermined value to thereby detune the resonator and allow energy to flow through the guide with little loss, and separate means for ionizing said gas or vapour independently of the magnitude of said wave energy.

6. Apparatus according to claim 5 wherein said waveguide is of a rectangular cross-section having a mode of propagation in which the electrical component of the wave energy is transverse to the direction of propagation, and wherein the outer wall of the toroidal resonator is provided with a rectangular aperture having its shorter dimension lying in a cross-section of the toroid, this aperture registering with a similar aperture in the wider face of the guide cut with its shorter dimension parallel to the length of the guide.

7. Apparatus according to claim 5 wherein said waveguide is of a rectangular cross-section having a mode of propagation in which the electrical component of wave energy is transverse to the direction of propagation, and wherein the outer wall of the toroidal resonator is provided with a rectangular aperture having its shorter dimension lying in a cross-section of the toroid, this aperture registering with a similar aperture in the narrower face of the guide cut with its longer dimension parallel to the length of the guide.

8. Apparatus according to claim 1 wherein the receiving circuit is coupled to the waveguide through a branch of said wave guide, and a switching device comprising a tuned toroidal resonator is connected in series with said receiver branch, said resonator having a gaseous filling which is ionized by the wave energy from the transmitting circuit and thereby protects the receiving circuit from said wave energy.

JOHN ASHMEAD.

REFERENCES CITED

The following references are of record in the file of this patent:

UNITED STATES PATENTS

Number	Name	Date
2,189,549	Hershberger	Feb. 6, 1940
2,396,044	Fox	Mar. 5, 1946
2,408,425	Jenks	Oct. 1, 1946
2,412,159	Leeds	Dec. 3, 1946
2,412,751	Rochester	Dec. 17, 1946
2,415,242	Hershberger	Feb. 4, 1947
2,416,105	Lindenblad	Feb. 18, 1947
2,424,984	Hoffman	Aug. 8, 1947
2,426,218	Hopgood	Aug. 26, 1947
2,438,873	McCarthy	Mar. 30, 1948
2,446,982	Pound	Aug. 10, 1948

OTHER REFERENCES

"Principles of Radar" by M. I. T. Radar School Staff, Second Edition Copyright 1946, Mc-Graw-Hill Book Co., pages 10–30, and 10–31. Copy in Division 51.