Sept. 24, 1968 J. N. PIPER 3,402,555

STEAM-JET NOZZLE FOR PROPELLING MARINE VESSELS

Filed April 19, 1967

Fig. 1

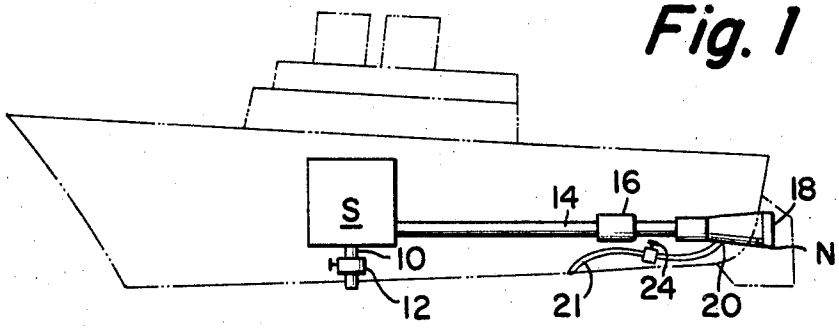

Fig. 2

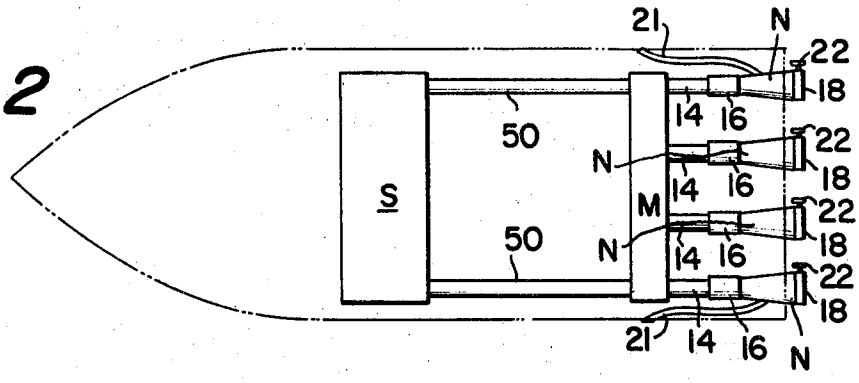

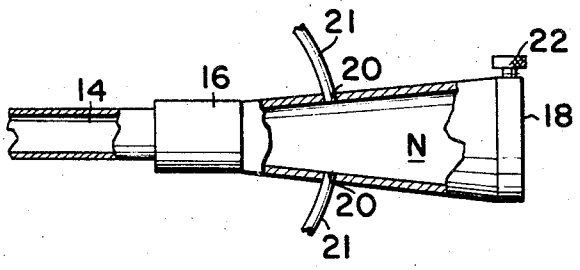

Fig. 3

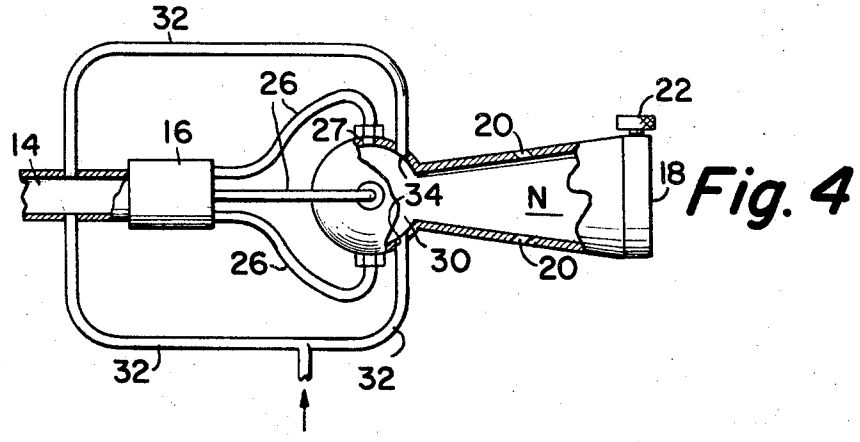

Fig. 4

United States Patent Office 3,402,555
Patented Sept. 24, 1968

3,402,555

STEAM-JET NOZZLE FOR PROPELLING MARINE VESSELS

Jack N. Piper, Conshohocken, Pa.
(3 S. Derby Ave., Ventnor, N.J. 08406)

Filed Apr. 19, 1967, Ser. No. 631,929
4 Claims. (Cl. 60—227)

ABSTRACT OF THE DISCLOSURE

An apparatus for optimizing the steam-jet exhaust in a marine propulsion system. Nozzle-like expansion chambers are employed to increase the exhaust velocity and density of raw water fed into them in the form of steam.

This invention relates to marine propulsion devices. In particular, it is concerned with means for obtaining optimum propulsive thrust for marine vessels upon generating steam from sea water or fresh water maintained in a closed system.

An object of this invention is to provide a mechanism for maximizing the exhaust velocity and density obtainable upon conversion of water to steam, and thereby maximize the propulsive force capable of being given to a boat per unit quantity of water so converted.

A further object is to optimize propulsive thrust, and introduce, continuously, raw sea water into the various expansion chambers of a marine propulsion system.

A still further object is to generate steam from raw sea water while minimizing or avoiding corrosion in marine boiler systems, as by keeping salt from the sea water in suspension.

The steam principle for marine propulsion systems is old in the art, as illustrated by U.S. Patents 420,670; 626,140; 789,641; 2,546,210, etc. However, previous methods for employing that principle have not been entirely satisfactory. Economy and efficiency of operation dictate a requirement for optimizing the propulsive thrust obtained per unit of fuel expended to propel the boat, and a need to be able to use sea water in the system without being determintal to the various parts subjected to the corrosive effects thereof. By means of the present system corrosion of marine boiler parts is avoided by keeping the salt in suspension, in which condition it has no serious effect on steel.

In accordance with the present invention salt is kept in suspension by maintaining sufficient pressure in the system up to the discharge point so as to prevent the flashing of water to steam prior to that point. As for optimizing the propulsive thrust, this is done by the induction of raw water into expansion chambers or steam jet nozzles so as to provide greater exhaust velocity and density than could be obtained by just plain steam exhaust, without expansion, as in the prior art.

The operation of the novel apparatus may readily be appreciated by reference to the accompanying schematic illustrations wherein:

FIG. 1 represents the "phantom" configuration of a ship, in side elevational view, partly in cross section, and showing one of a series of the inventive steam-jet nozzles schematically incorporated therein, all connected to a steam generative source;

FIG. 2 is a top plan view of the FIG. 1 ship, taken from just above the series of steam-jet nozzles, showing them connected to a manifold which receives the steam from its generative source;

FIG. 3 depicts, in enlarged longitudinal cross-section, one of the steam-jet nozzles of FIGS. 1 and 2 which is adapted to generate and discharge steam under high pressure whereby to propel a vessel, to which it is attached,

through direct rocket action of the steam acting upon the vessel in a well-known manner; and

FIG. 4 is a variation of the FIG. 3 jet nozzle.

Referring now to the drawings, the operation of the present invention may be explained as follows. In FIGS. 1 and 2 several of the novel steam-jet nozzles N are shown schematically incorporated in a boat, all connected by means of a manifold M, through pipes **50** to a steam generation source S. Sea water is taken on through pipe **10**, the flow being regulated by valve **12** which opens to admit water to the steam generative source S. The water is heated by means of a heat exchanger or a boiler fired by any suitable means (e.g., oil, coal, nuclear energy), and is thereby converted into steam. Heating of the water takes place under pressure and, while still under pressure and elevated temperature, the water is fed from generator S through manifold M and pipes **14** to throttle valves **16**. The temperature is always kept above 212° F. and the pressure is always maintaind sufficiently high to keep the water in its liquid state. A typical set of working conditions would be a temperature of about 600–700° F., and a pressure of about 1000 p.s.i.

As valves **16** are opened the sudden release of pressure causes the water instantly to flash or be converted to steam which then expands and exhausts through the outwardly enlarged flared opening or exit end **18** of nozzle N. Raw sea water is continuously drawn by a venturi action or is pumped through one or more ports **20**, to become mixed with the live steam which is to exhaust through the exit end **18** of nozzle N. The rearwardly exhausting supercharged steam thus imparts an oppositely directed force on the hull to drive the boat in a forward direction. Depending upon the amount of raw water that is thus newly introduced into the flow of steam, some or all of the water will also flash into steam, thereby creating more pressure and consequently more velocity and density of the exiting fluids. Alternatively, the newly added water may cause some of the escaping steam to condense into water. Either combination will provide much greater density to the thrust which is imparted to the vessel than if the steam had not been thus supercharged with the raw water additions.

The amount of raw sea water admitted into nozzles N can be regulated by means of valves (not shown), thereby controlling the amount of the higher velocity exhaust or denser exhaust independently of the adjustment made to valve **16**. Either system of adjusting the ratio of live steam to raw water injected into the expansion nozzle N will provide additional thrust which otherwise would be unobtainable without the present invention. If a small amount of raw water is introduced, more steam is developed and the result is an increase in velocity and density. If a large amount of raw water is injected the greater amount of water in relation to the steam causes an increase in density and a decrease in velocity. Greater velocity thus may be obtained when increased speed of the ship is desired, whereas increased power may be obtained when desired by increasing the density at a sacrifice of velocity.

In the FIG. 4 alternate form of the present invention water under high pressure and temperature, or live steam, is fed from its generative source through pipe **14** to the point where there is a closed throttle valve **16**. As valve **16** is opened the water passes through pipes **26** and ports **27** to a prenozzle expansion chamber **30**. At this point raw water may be drawn from the sea and injected continuously by means of pipes **32** through ports **34**. Upon proper adjustment of the steam-to-water ratio, as explained previously, the additional water is made to flash to steam before it enters the nozzle N, and this increase in the steam pressure makes possible even greater expansion

(and consequently greater velocity) as the steam moves through to the rear and out through flared exit end **18** of nozzle N. In doing so, the pressure, velocity and density of the hot fluids from the steam generator are increased sharply, thus providing a much greater propulsive thrust than if the steam had not thus been supercharged. As in the FIG. 3 device, a gate **22** is provided to close off exit end **18** of nozzle N. This gate is used in the same manner to force the steam back and out through ports **20**, rather than to permit the steam to exhaust through exit end **18**. This technique is identical with that described above, and may be employed when it is desired to reverse the direction of the boat.

Referring again to FIGS. 1–2–3, a preferred arrangement for ports **20** may be that which is illustrated. As shown, the ports are angled so that their inner openings are closer to the rear end than are the outer openings. The ports are connected by pipes **21** which are positioned as illustrated so as to have access to raw sea water, immediately outside the hull, the passage of water through pipes **21** being controlled by valves **24**. The angular position of pipes **21** through the hull facilitates the induction of water as the ship moves forwardly. This arrangement, coupled with the venturi action built into the system, may make it unnecessary to pump the water up through pipes **21** to nozzle N. However, as indicated previously, pumps may optionally be employed to force the required amounts of water to nozzle N.

Gates are provided so as optionally to close off exit end **18** of nozzle N. When gates **22** are used to close off end **18**, the steam which is confined in nozzle N can only escape through ports **20** and pipes **21**. In so escaping the steam imparts a thrust in the opposite direction to the forward motion of the boat. The reaction from this action causes the boat to move in the reverse direction.

Although preferred embodiments have been described and illustrated, in specific terms and illustrations, it should be understood that various changes may be made in the size, shape, materials, locations and arrangements without in the least departing from the spirit and scope of the claimed invention. As will be apparent to those familiar with the art, the present invention makes it possible to utilize sea water without the normal concern for corrosive action on the parts coming in contact therewith. The salt in the sea water is given very little opportunity to settle out on the metal parts, being held in suspension until the flash point is reached and the water becomes steam. Even so, if desired, the nozzles and other parts which come into contact with the salt water can be made so as to be readily accessible and replaceable, thereby keeping costs of manufacture and repair to a very minimum. Actually, as will be apparent from the foregoing general description, my invention is broad in concept and should only be limited by the following claims.

I claim:

1. A steam-jet nozzle system for propelling marine vessels consisting of a generative source of steam, a nozzle having an entrance end and an exit end shaped so as to flare outwardly to a diameter at its exit end which is much wider than the diameter at its entrance end, a pipe for conveying super-heated water from said steam generative source to the entrance end of said nozzle, a throttle valve controlling the passage of the superheated water from said pipe to said nozzle where it is caused instantly to flash to steam, means for introducing raw water from the body of water on which the marine vessel is situated directly into the nozzle intermediate said entrance and exit ends so as to be converted into steam and thereby supplement the steam already in said nozzle, means for regulating the amount of raw water introduced into the nozzle, and a gate adapted optionally to control the passage of steam so that when the gate is open the steam passes out through the exit end of said nozzle but when the gate is closed the steam reverses direction and passes out of the nozzle through said means for introducing the raw water into the nozzle.

2. The steam-jet nozzle system of claim **1** additionally containing a prenozzle expansion chamber situated between the pipe and the nozzle, with extensions of said pipe available to conduct the superheated water from the generative source to said expansion chamber, and the means for introducing raw water adapted to admit that water into the chamber adjacent the entrance end of the nozzle, whereby the raw water is caused to flash to steam along with the superheated water in said chamber and thereby provide an increased thrust as the expanding steam moves through the nozzle toward its exit end.

3. The steam-jet nozzle system of claim **1** in which there are a multiple number of the nozzles, each having its own throttle valve and pipe for conducting the superheated water, a manifold situated intermediate the pipes and the steam-generative source for delivering the superheated water to said pipes, and means for conveying the water from said steam-generative source to said manifold.

4. The steam-jet nozzle system of claim **1** additionally containing means for introducing raw water from the body of water on which the marine vessel is situated into said steam generative source, and means for regulating the amount of water introduced into said generative source.

References Cited

UNITED STATES PATENTS

789,641	5/1905	Weeks	115—11
942,199	12/1909	Fanning	103—264
3,013,384	12/1961	Smith	60—227 XR
3,337,121	8/1967	Coanda	103—264 XR
3,344,882	10/1967	Bellion et al.	60—229 XR

CARLTON R. CROYLE, *Primary Examiner.*