(12) INTERNATIONAL APPLICATION PUBLISHED UNDER THE PATENT COOPERATION TREATY (PCT)

(19) World Intellectual Property Organization
International Bureau

(43) International Publication Date
26 April 2018 (26.04.2018)

WIPO | PCT

(10) International Publication Number
WO 2018/075186 A1

(51) International Patent Classification:
H01P 5/18 (2006.01)

(21) International Application Number:
PCT/US2017/052473

(22) International Filing Date:
20 September 2017 (20.09.2017)

(25) Filing Language: English

(26) Publication Language: English

(30) Priority Data:
15/299,564 21 October 2016 (21.10.2016) US

(71) Applicant: **AT&T INTELLECTUAL PROPERTY I, L.P.** [US/US]; 675 West Peachtree Street, Atlanta, Georgia 30308 (US).

(72) Inventors: **HENRY, Paul Shala**; 7 Crow Field Lane, Holmdel, New Jersey 07733 (US). **BARNICKEL, Donald J.**; 3 Wells Road, Flemington, New Jersey 08822 (US). **BARZEGAR, Farhad**; 14 Farrington Lane, Branchburg, New Jersey 08876 (US). **BENNETT, Robert**; 1540 North Bayview Rd EXT, Southold, New York 11971 (US). **GERSZBERG, Irwin**; 12 Dickinson Road, Kendall Park, New Jersey 08824 (US). **WILLIS, Thomas M. III**; 10 Beverly Court, Tinton Falls, New Jersey 07724 (US).

(74) Agent: **GUNTIN, Ed** et al.; 117 S. Cook St. No. 358, Barrington, Illinois 60010 (US).

(81) Designated States *(unless otherwise indicated, for every kind of national protection available)*: AE, AG, AL, AM, AO, AT, AU, AZ, BA, BB, BG, BH, BN, BR, BW, BY, BZ, CA, CH, CL, CN, CO, CR, CU, CZ, DE, DJ, DK, DM, DO, DZ, EC, EE, EG, ES, FI, GB, GD, GE, GH, GM, GT, HN, HR, HU, ID, IL, IN, IR, IS, JO, JP, KE, KG, KH, KN, KP, KR, KW, KZ, LA, LC, LK, LR, LS, LU, LY, MA, MD, ME, MG, MK, MN, MW, MX, MY, MZ, NA, NG, NI, NO, NZ, OM, PA, PE, PG, PH, PL, PT, QA, RO, RS, RU, RW, SA, SC, SD, SE, SG, SK, SL, SM, ST, SV, SY, TH, TJ, TM, TN, TR, TT, TZ, UA, UG, US, UZ, VC, VN, ZA, ZM, ZW.

(84) Designated States *(unless otherwise indicated, for every kind of regional protection available)*: ARIPO (BW, GH, GM, KE, LR, LS, MW, MZ, NA, RW, SD, SL, ST, SZ, TZ, UG, ZM, ZW), Eurasian (AM, AZ, BY, KG, KZ, RU, TJ, TM), European (AL, AT, BE, BG, CH, CY, CZ, DE, DK, EE, ES, FI, FR, GB, GR, HR, HU, IE, IS, IT, LT, LU, LV, MC, MK, MT, NL, NO, PL, PT, RO, RS, SE, SI, SK, SM, TR), OAPI (BF, BJ, CF, CG, CI, CM, GA, GN, GQ, GW, KM, ML, MR, NE, SN, TD, TG).

Declarations under Rule 4.17:
— *as to applicant's entitlement to apply for and be granted a patent (Rule 4.17(ii))*

Published:
— *with international search report (Art. 21(3))*
— *with amended claims and statement (Art. 19(1))*

(54) Title: LAUNCHER AND COUPLING SYSTEM FOR GUIDED WAVE MODE CANCELLATION

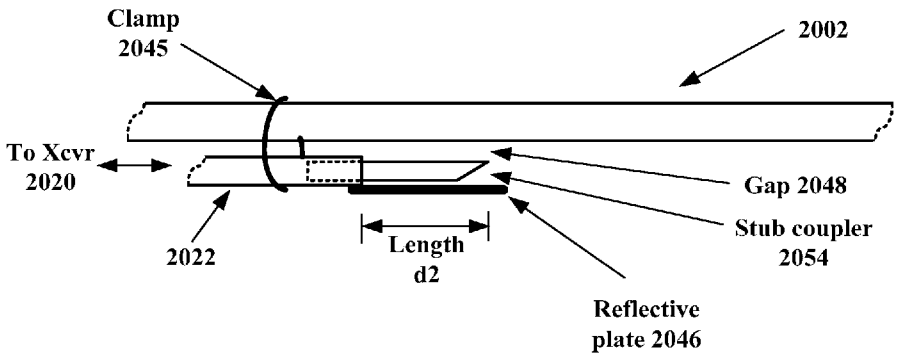

FIG. 20D

(57) Abstract: Aspects of the subject disclosure may include, for example, a coupling module that includes a waveguide that guides a first electromagnetic wave conveying data from a transmitting device. A dielectric coupler receives the first electromagnetic wave from the waveguide to form a second electromagnetic wave, and that guides the second electromagnetic wave along the dielectric coupler adjacent to a transmission medium, and wherein the dielectric coupler has a length that supports a cancellation of at least one cancelled wave mode from a coupling of the second electromagnetic wave to the transmission medium.

WO 2018/075186 A1

LAUNCHER AND COUPLING SYSTEM FOR GUIDED WAVE MODE CANCELLATION

CROSS-REFERENCE TO RELATED APPLICATIONS

[0001] This application claims priority to U.S. Patent Application Serial No. 15/299,564, filed 21 October 2016. The contents of the foregoing are hereby incorporated by reference into this application as if set forth herein in full.

FIELD OF THE DISCLOSURE

[0002] The subject disclosure relates to a method and apparatus for managing utilization of wireless resources.

BACKGROUND

[0003] As smart phones and other portable devices increasingly become ubiquitous, and data usage increases, macrocell base station devices and existing wireless infrastructure in turn require higher bandwidth capability in order to address the increased demand. To provide additional mobile bandwidth, small cell deployment is being pursued, with microcells and picocells providing coverage for much smaller areas than traditional macrocells.

[0004] In addition, most homes and businesses have grown to rely on broadband data access for services such as voice, video and Internet browsing, etc. Broadband access networks include satellite, 4G or 5G wireless, power line communication, fiber, cable, and telephone networks.

BRIEF DESCRIPTION OF THE DRAWINGS

[0005] Reference will now be made to the accompanying drawings, which are not necessarily drawn to scale, and wherein:

[0006] **FIG. 1** is a block diagram illustrating an example, non-limiting embodiment of a guided-wave communications system in accordance with various aspects described herein.

[0007] **FIG. 2** is a block diagram illustrating an example, non-limiting embodiment of a transmission device in accordance with various aspects described herein.

[0008] **FIG. 3** is a graphical diagram illustrating an example, non-limiting embodiment of an electromagnetic field distribution in accordance with various aspects described herein.

[0009] **FIG. 4** is a graphical diagram illustrating an example, non-limiting embodiment of an electromagnetic field distribution in accordance with various aspects described herein.

[0010] **FIG. 5A** is a graphical diagram illustrating an example, non-limiting embodiment of a frequency response in accordance with various aspects described herein.

[0011] **FIG. 5B** is a graphical diagram illustrating example, non-limiting embodiments of a longitudinal cross-section of an insulated wire depicting fields of guided electromagnetic waves at various operating frequencies in accordance with various aspects described herein.

[0012] **FIG. 6** is a graphical diagram illustrating an example, non-limiting embodiment of an electromagnetic field distribution in accordance with various aspects described herein.

[0013] **FIG. 7** is a block diagram illustrating an example, non-limiting embodiment of an arc coupler in accordance with various aspects described herein.

[0014] **FIG. 8** is a block diagram illustrating an example, non-limiting embodiment of an arc coupler in accordance with various aspects described herein.

[0015] **FIG. 9A** is a block diagram illustrating an example, non-limiting embodiment of a stub coupler in accordance with various aspects described herein.

[0016] **FIG. 9B** is a diagram illustrating an example, non-limiting embodiment of an electromagnetic distribution in accordance with various aspects described herein.

[0017] **FIGs. 10A and 10B** are block diagrams illustrating example, non-limiting embodiments of couplers and transceivers in accordance with various aspects described herein.

[0018] **FIG. 11** is a block diagram illustrating an example, non-limiting embodiment of a dual stub coupler in accordance with various aspects described herein.

[0019] **FIG. 12** is a block diagram illustrating an example, non-limiting embodiment of a repeater system in accordance with various aspects described herein.

[0020] **FIG. 13** illustrates a block diagram illustrating an example, non-limiting embodiment of a bidirectional repeater in accordance with various aspects described herein.

[0021] **FIG. 14** is a block diagram illustrating an example, non-limiting embodiment of a waveguide system in accordance with various aspects described herein.

[0022] **FIG. 15** is a block diagram illustrating an example, non-limiting embodiment of a guided-wave communications system in accordance with various aspects described herein.

[0023] **FIGs. 16A and 16B** are block diagrams illustrating an example, non-limiting embodiment of a system for managing a communication system in accordance with various aspects described herein.

[0024] **FIG. 17A** illustrates a flow diagram of an example, non-limiting embodiment of a method for detecting and mitigating disturbances occurring in a communication network of the system of **FIGs. 16A** and **16B**.

[0025] **FIG. 17B** illustrates a flow diagram of an example, non-limiting embodiment of a method for detecting and mitigating disturbances occurring in a communication network of the system of **FIGs. 16A** and **16B**.

[0026] **FIG. 18A** is a block diagram illustrating an example, non-limiting embodiment of a communication system in accordance with various aspects described herein.

[0027] **FIG. 18B** is a block diagram illustrating an example, non-limiting embodiment of a portion of the communication system of FIG. 18A in accordance with various aspects described herein.

[0028] **FIGs. 18C-18D** are block diagrams illustrating example, non-limiting embodiments of a communication node of the communication system of FIG. 18A in accordance with various aspects described herein.

[0029] **FIG. 19A** is a graphical diagram illustrating an example, non-limiting embodiment of downlink and uplink communication techniques for enabling a base station to communicate with communication nodes in accordance with various aspects described herein.

[0030] **FIG. 19B** is a block diagram illustrating an example, non-limiting embodiment of a communication node in accordance with various aspects described herein.

[0031] **FIG. 19C** is a block diagram illustrating an example, non-limiting embodiment of a communication node in accordance with various aspects described herein.

[0032] **FIG. 19D** is a graphical diagram illustrating an example, non-limiting embodiment of a frequency spectrum in accordance with various aspects described herein.

[0033] **FIG. 19E** is a graphical diagram illustrating an example, non-limiting embodiment of a frequency spectrum in accordance with various aspects described herein.

[0034] **FIG. 19F** is a graphical diagram illustrating an example, non-limiting embodiment of a frequency spectrum in accordance with various aspects described herein.

[0035] **FIG. 19G** is a graphical diagram illustrating an example, non-limiting embodiment of a frequency spectrum in accordance with various aspects described herein.

[0036] **FIG. 19H** is a block diagram illustrating an example, non-limiting embodiment of a transmitter in accordance with various aspects described herein.

[0037] **FIG. 19I** is a block diagram illustrating an example, non-limiting embodiment of a receiver in accordance with various aspects described herein.

[0038] **FIG. 20A** is a block diagram illustrating an example, non-limiting embodiment of a coupling system in accordance with various aspects described herein.

[0039] **FIG. 20B** is a block diagram illustrating an example, non-limiting embodiment of a dielectric coupler end shapes and cross sections in accordance with various aspects described herein.

[0040] **FIG. 20C** is a block diagram illustrating an example, non-limiting embodiment of a coupling system in accordance with various aspects described herein.

[0041] **FIG. 20D** is a block diagram illustrating an example, non-limiting embodiment of a coupling system in accordance with various aspects described herein.

[0042] **FIG. 21** is a block diagram of an example, non-limiting embodiment of a computing environment in accordance with various aspects described herein.

[0043] **FIG. 22** is a block diagram of an example, non-limiting embodiment of a mobile network platform in accordance with various aspects described herein.

[0044] **FIG. 23** is a block diagram of an example, non-limiting embodiment of a communication device in accordance with various aspects described herein.

DETAILED DESCRIPTION

[0045] One or more embodiments are now described with reference to the drawings, wherein like reference numerals are used to refer to like elements throughout. In the following description, for purposes of explanation, numerous details are set forth in order to provide a thorough understanding of the various embodiments. It is evident, however, that the various embodiments can be practiced without these details (and without applying to any particular networked environment or standard).

[0046] In an embodiment, a guided wave communication system is presented for sending and receiving communication signals such as data or other signaling via guided electromagnetic waves. The guided electromagnetic waves include, for example, surface waves or other electromagnetic waves that are bound to or guided by a transmission medium. It will be appreciated that a variety of transmission media can be utilized with guided wave communications without departing from example embodiments. Examples of such transmission media can include one or more of the following, either alone or in one or more combinations: wires, whether insulated or not, and whether single-stranded or multi-stranded; conductors of other shapes or configurations including wire bundles, cables, rods, rails, pipes; non-conductors such as dielectric pipes, rods, rails, or other dielectric members; combinations of conductors and dielectric materials; or other guided wave transmission media.

[0047] The inducement of guided electromagnetic waves on a transmission medium can be independent of any electrical potential, charge or current that is injected or otherwise transmitted through the transmission medium as part of an electrical circuit. For example, in the case where the transmission medium is a wire, it is to be appreciated that while a small current in the wire may be formed in response to the propagation of the guided waves along the wire, this can be due to the propagation of the electromagnetic wave along the wire surface, and is not formed in response to electrical potential, charge or current that is injected into the wire as part of an electrical circuit. The electromagnetic waves traveling on the wire therefore do not require a circuit to propagate along the wire surface. The wire therefore is a single wire transmission line that is not part of a circuit. Also, in some embodiments, a wire is not necessary, and the electromagnetic waves can propagate along a single line transmission medium that is not a wire.

[0048] More generally, "guided electromagnetic waves" or "guided waves" as described by the subject disclosure are affected by the presence of a physical object that is at least a part of the transmission medium (e.g., a bare wire or other conductor, a dielectric, an insulated wire, a conduit or other hollow element, a bundle of insulated wires that is coated, covered or surrounded by a dielectric or insulator or other wire bundle, or another form of solid, liquid or otherwise non-gaseous transmission medium) so as to be at least partially bound to or guided by the physical object and so as to propagate along a transmission path of the physical object. Such a physical object can operate as at least a part of a transmission medium that guides, by way of an interface of the transmission medium (e.g., an outer surface, inner surface, an interior portion between the outer and the inner surfaces or other boundary between elements

of the transmission medium), the propagation of guided electromagnetic waves, which in turn can carry energy, data and/or other signals along the transmission path from a sending device to a receiving device.

[0049] Unlike free space propagation of wireless signals such as unguided (or unbounded) electromagnetic waves that decrease in intensity inversely by the square of the distance traveled by the unguided electromagnetic waves, guided electromagnetic waves can propagate along a transmission medium with less loss in magnitude per unit distance than experienced by unguided electromagnetic waves.

[0050] Unlike electrical signals, guided electromagnetic waves can propagate from a sending device to a receiving device without requiring a separate electrical return path between the sending device and the receiving device. As a consequence, guided electromagnetic waves can propagate from a sending device to a receiving device along a transmission medium having no conductive components (e.g., a dielectric strip), or via a transmission medium having no more than a single conductor (e.g., a single bare wire or insulated wire). Even if a transmission medium includes one or more conductive components and the guided electromagnetic waves propagating along the transmission medium generate currents that flow in the one or more conductive components in a direction of the guided electromagnetic waves, such guided electromagnetic waves can propagate along the transmission medium from a sending device to a receiving device without requiring a flow of opposing currents on an electrical return path between the sending device and the receiving device.

[0051] In a non-limiting illustration, consider electrical systems that transmit and receive electrical signals between sending and receiving devices by way of conductive media. Such systems generally rely on electrically separate forward and return paths. For instance, consider a coaxial cable having a center conductor and a ground shield that are separated by an insulator. Typically, in an electrical system a first terminal of a sending (or receiving) device can be connected to the center conductor, and a second terminal of the sending (or receiving) device can be connected to the ground shield. If the sending device injects an electrical signal in the center conductor via the first terminal, the electrical signal will propagate along the center conductor causing forward currents in the center conductor, and return currents in the ground shield. The same conditions apply for a two terminal receiving device.

[0052] In contrast, consider a guided wave communication system such as described in the subject disclosure, which can utilize different embodiments of a transmission medium (including among others a coaxial cable) for transmitting and receiving guided electromagnetic

waves without an electrical return path. In one embodiment, for example, the guided wave communication system of the subject disclosure can be configured to induce guided electromagnetic waves that propagate along an outer surface of a coaxial cable. Although the guided electromagnetic waves will cause forward currents on the ground shield, the guided electromagnetic waves do not require return currents to enable the guided electromagnetic waves to propagate along the outer surface of the coaxial cable. The same can be said of other transmission media used by a guided wave communication system for the transmission and reception of guided electromagnetic waves. For example, guided electromagnetic waves induced by the guided wave communication system on an outer surface of a bare wire, or an insulated wire can propagate along the bare wire or the insulated bare wire without an electrical return path.

[0053] Consequently, electrical systems that require two or more conductors for carrying forward and reverse currents on separate conductors to enable the propagation of electrical signals injected by a sending device are distinct from guided wave systems that induce guided electromagnetic waves on an interface of a transmission medium without the need of an electrical return path to enable the propagation of the guided electromagnetic waves along the interface of the transmission medium.

[0054] It is further noted that guided electromagnetic waves as described in the subject disclosure can have an electromagnetic field structure that lies primarily or substantially outside of a transmission medium so as to be bound to or guided by the transmission medium and so as to propagate non-trivial distances on or along an outer surface of the transmission medium. In other embodiments, guided electromagnetic waves can have an electromagnetic field structure that lies primarily or substantially inside a transmission medium so as to be bound to or guided by the transmission medium and so as to propagate non-trivial distances within the transmission medium. In other embodiments, guided electromagnetic waves can have an electromagnetic field structure that lies partially inside and partially outside a transmission medium so as to be bound to or guided by the transmission medium and so as to propagate non-trivial distances along the transmission medium. The desired electronic field structure in an embodiment may vary based upon a variety of factors, including the desired transmission distance, the characteristics of the transmission medium itself, and environmental conditions/characteristics outside of the transmission medium (e.g., presence of rain, fog, atmospheric conditions, etc.).

[0055] It is further noted that guided wave systems as described in the subject disclosure also differ from fiber optical systems. Guided wave systems of the subject disclosure can induce guided electromagnetic waves on an interface of a transmission medium constructed of an opaque material (e.g., a dielectric cable made of polyethylene) or a material that is otherwise resistive to the transmission of light waves (e.g., a bare conductive wire or an insulated conductive wire) enabling propagation of the guided electromagnetic waves along the interface of the transmission medium over non-trivial distances. Fiber optic systems in contrast cannot function with a transmission medium that is opaque or other resistive to the transmission of light waves.

[0056] Various embodiments described herein relate to coupling devices, that can be referred to as "waveguide coupling devices", "waveguide couplers" or more simply as "couplers", "coupling devices" or "launchers" for launching and/or extracting guided electromagnetic waves to and from a transmission medium at millimeter-wave frequencies (e.g., 30 to 300 GHz), wherein the wavelength can be small compared to one or more dimensions of the coupling device and/or the transmission medium such as the circumference of a wire or other cross sectional dimension, or lower microwave frequencies such as 300MHz to 30GHz. Transmissions can be generated to propagate as waves guided by a coupling device, such as: a strip, arc or other length of dielectric material; a horn, monopole, rod, slot or other antenna; an array of antennas; a magnetic resonant cavity, or other resonant coupler; a coil, a strip line, a waveguide or other coupling device. In operation, the coupling device receives an electromagnetic wave from a transmitter or transmission medium. The electromagnetic field structure of the electromagnetic wave can be carried inside the coupling device, outside the coupling device or some combination thereof. When the coupling device is in close proximity to a transmission medium, at least a portion of an electromagnetic wave couples to or is bound to the transmission medium, and continues to propagate as guided electromagnetic waves. In a reciprocal fashion, a coupling device can extract guided waves from a transmission medium and transfer these electromagnetic waves to a receiver.

[0057] According to an example embodiment, a surface wave is a type of guided wave that is guided by a surface of a transmission medium, such as an exterior or outer surface of the wire, or another surface of the wire that is adjacent to or exposed to another type of medium having different properties (e.g., dielectric properties). Indeed, in an example embodiment, a surface of the wire that guides a surface wave can represent a transitional surface between two different types of media. For example, in the case of a bare or uninsulated wire, the surface of

the wire can be the outer or exterior conductive surface of the bare or uninsulated wire that is exposed to air or free space. As another example, in the case of insulated wire, the surface of the wire can be the conductive portion of the wire that meets the insulator portion of the wire, or can otherwise be the insulator surface of the wire that is exposed to air or free space, or can otherwise be any material region between the insulator surface of the wire and the conductive portion of the wire that meets the insulator portion of the wire, depending upon the relative differences in the properties (e.g., dielectric properties) of the insulator, air, and/or the conductor and further dependent on the frequency and propagation mode or modes of the guided wave.

[0058] According to an example embodiment, the term "about" a wire or other transmission medium used in conjunction with a guided wave can include fundamental guided wave propagation modes such as a guided waves having a circular or substantially circular field distribution, a symmetrical electromagnetic field distribution (e.g., electric field, magnetic field, electromagnetic field, etc.) or other fundamental mode pattern at least partially around a wire or other transmission medium. In addition, when a guided wave propagates "about" a wire or other transmission medium, it can do so according to a guided wave propagation mode that includes not only the fundamental wave propagation modes (e.g., zero order modes), but additionally or alternatively non-fundamental wave propagation modes such as higher-order guided wave modes (e.g., 1st order modes, 2nd order modes, etc.), asymmetrical modes and/or other guided (e.g., surface) waves that have non-circular field distributions around a wire or other transmission medium. As used herein, the term "guided wave mode" refers to a guided wave propagation mode of a transmission medium, coupling device or other system component of a guided wave communication system.

[0059] For example, such non-circular field distributions can be unilateral or multi-lateral with one or more axial lobes characterized by relatively higher field strength and/or one or more nulls or null regions characterized by relatively low-field strength, zero-field strength or substantially zero-field strength. Further, the field distribution can otherwise vary as a function of azimuthal orientation around the wire such that one or more angular regions around the wire have an electric or magnetic field strength (or combination thereof) that is higher than one or more other angular regions of azimuthal orientation, according to an example embodiment. It will be appreciated that the relative orientations or positions of the guided wave higher order modes or asymmetrical modes can vary as the guided wave travels along the wire.

[0060] As used herein, the term "millimeter-wave" can refer to electromagnetic waves/signals that fall within the "millimeter-wave frequency band" of 30 GHz to 300 GHz. The term "microwave" can refer to electromagnetic waves/signals that fall within a "microwave frequency band" of 300 MHz to 300 GHz. The term "radio frequency" or "RF" can refer to electromagnetic waves/signals that fall within the "radio frequency band" of 10 kHz to 1 THz. It is appreciated that wireless signals, electrical signals, and guided electromagnetic waves as described in the subject disclosure can be configured to operate at any desirable frequency range, such as, for example, at frequencies within, above or below millimeter-wave and/or microwave frequency bands. In particular, when a coupling device or transmission medium includes a conductive element, the frequency of the guided electromagnetic waves that are carried by the coupling device and/or propagate along the transmission medium can be below the mean collision frequency of the electrons in the conductive element. Further, the frequency of the guided electromagnetic waves that are carried by the coupling device and/or propagate along the transmission medium can be a non-optical frequency, e.g., a radio frequency below the range of optical frequencies that begins at 1 THz.

[0061] As used herein, the term "antenna" can refer to a device that is part of a transmitting or receiving system to transmit/radiate or receive wireless signals.

[0062] In accordance with one or more embodiments, a launcher includes a hollow waveguide that guides a first electromagnetic wave conveying first data from a transmitting device. A dielectric stub coupler receives the first electromagnetic wave from the hollow waveguide to form a second electromagnetic wave that propagates along a portion of the dielectric stub coupler adjacent to a transmission medium, wherein second electromagnetic wave propagates along the dielectric stub coupler via a first guided wave mode and a second guided wave mode, and wherein the portion has a length that supports a coupling of the second guided wave mode for propagation along an outer surface of the transmission medium.

[0063] In accordance with one or more embodiments, a coupling module comprises a hollow waveguide that guides a first electromagnetic wave conveying first data from a transmitting device. A dielectric stub coupler receives the first electromagnetic wave from the hollow waveguide to form a second electromagnetic wave, that guides the second electromagnetic wave along a portion of the dielectric stub coupler adjacent to a transmission medium, wherein second electromagnetic wave propagates along the dielectric stub coupler via a first guided wave mode and a second guided wave mode, and wherein the portion supports

a coupling of the second guided wave mode for propagation along an outer surface of the transmission medium while suppressing the first guided wave mode. A reflective surface is aligned parallel to the portion of the dielectric stub coupler, wherein the portion of the dielectric stub coupler is between the reflective surface and the transmission medium.

[0064] In accordance with one or more embodiments, a coupling system comprises waveguide means for guiding a first electromagnetic wave conveying first data from a transmitting device and conductorless coupling means for receiving the first electromagnetic wave from the waveguide means and for forming a second electromagnetic wave that propagates along a portion of the conductorless coupling means adjacent to a transmission medium, wherein second electromagnetic wave propagates along the conductorless coupling means via a first guided wave mode and a second guided wave mode, and wherein the portion has a length that supports a coupling of the second guided wave mode for propagation along an outer surface of the transmission medium.

[0065] In accordance with one or more embodiments, a launcher comprises a hollow waveguide that guides a first electromagnetic wave conveying first data from a transmitting device. A dielectric stub coupler that receives the first electromagnetic wave from the hollow waveguide to form a second electromagnetic wave that propagates along the dielectric stub coupler adjacent to a transmission medium, and wherein the dielectric stub coupler has a length extending from an end of the hollow waveguide that supports cancellation of at least one cancelled wave mode from the second electromagnetic wave.

[0066] In accordance with one or more embodiments, a coupling module comprises a waveguide that guides a first electromagnetic wave conveying first data from a transmitting device. A dielectric coupler receives the first electromagnetic wave from the waveguide to form a second electromagnetic wave, and that guides the second electromagnetic wave along the dielectric coupler adjacent to a transmission medium, and wherein the dielectric coupler has a length that supports cancellation of at least one cancelled wave mode from the second electromagnetic wave.

[0067] In accordance with one or more embodiments, a coupling system comprises waveguide means for guiding a first electromagnetic wave conveying first data from a transmitting device, and conductorless coupling means for receiving the first electromagnetic wave from the waveguide means to form a second electromagnetic wave, and for guiding the second electromagnetic wave along the conductorless coupling means adjacent to a transmission medium, wherein the conductorless coupling means has a length extending from

the waveguide means to an exposed end that supports cancellation of at least one cancelled wave mode from the second electromagnetic wave.

[0068] Referring now to **FIG. 1**, a block diagram 100 illustrating an example, non-limiting embodiment of a guided wave communications system is shown. In operation, a transmission device 101 receives one or more communication signals 110 from a communication network or other communications device that includes data and generates guided waves 120 to convey the data via the transmission medium 125 to the transmission device 102. The transmission device 102 receives the guided waves 120 and converts them to communication signals 112 that include the data for transmission to a communications network or other communications device. The guided waves 120 can be modulated to convey data via a modulation technique such as phase shift keying, frequency shift keying, quadrature amplitude modulation, amplitude modulation, multi-carrier modulation such as orthogonal frequency division multiplexing and via multiple access techniques such as frequency division multiplexing, time division multiplexing, code division multiplexing, multiplexing via differing wave propagation modes and via other modulation and access strategies.

[0069] The communication network or networks can include a wireless communication network such as a mobile data network, a cellular voice and data network, a wireless local area network (e.g., WiFi or an 802.xx network), a satellite communications network, a personal area network or other wireless network. The communication network or networks can also include a wired communication network such as a telephone network, an Ethernet network, a local area network, a wide area network such as the Internet, a broadband access network, a cable network, a fiber optic network, or other wired network. The communication devices can include a network edge device, bridge device or home gateway, a set-top box, broadband modem, telephone adapter, access point, base station, or other fixed communication device, a mobile communication device such as an automotive gateway or automobile, laptop computer, tablet, smartphone, cellular telephone, or other communication device.

[0070] In an example embodiment, the guided wave communication system 100 can operate in a bi-directional fashion where transmission device 102 receives one or more communication signals 112 from a communication network or device that includes other data and generates guided waves 122 to convey the other data via the transmission medium 125 to the transmission device 101. In this mode of operation, the transmission device 101 receives the guided waves 122 and converts them to communication signals 110 that include the other data for transmission to a communications network or device. The guided waves 122 can be

modulated to convey data via a modulation technique such as phase shift keying, frequency shift keying, quadrature amplitude modulation, amplitude modulation, multi-carrier modulation such as orthogonal frequency division multiplexing and via multiple access techniques such as frequency division multiplexing, time division multiplexing, code division multiplexing, multiplexing via differing wave propagation modes and via other modulation and access strategies.

[0071] The transmission medium 125 can include a cable having at least one inner portion surrounded by a dielectric material such as an insulator or other dielectric cover, coating or other dielectric material, the dielectric material having an outer surface and a corresponding circumference. In an example embodiment, the transmission medium 125 operates as a single-wire transmission line to guide the transmission of an electromagnetic wave. When the transmission medium 125 is implemented as a single wire transmission system, it can include a wire. The wire can be insulated or uninsulated, and single-stranded or multi-stranded (e.g., braided). In other embodiments, the transmission medium 125 can contain conductors of other shapes or configurations including wire bundles, cables, rods, rails, pipes. In addition, the transmission medium 125 can include non-conductors such as dielectric pipes, rods, rails, or other dielectric members; combinations of conductors and dielectric materials, conductors without dielectric materials or other guided wave transmission media. It should be noted that the transmission medium 125 can otherwise include any of the transmission media previously discussed.

[0072] Further, as previously discussed, the guided waves 120 and 122 can be contrasted with radio transmissions over free space / air or conventional propagation of electrical power or signals through the conductor of a wire via an electrical circuit. In addition to the propagation of guided waves 120 and 122, the transmission medium 125 may optionally contain one or more wires that propagate electrical power or other communication signals in a conventional manner as a part of one or more electrical circuits.

[0073] Referring now to **FIG. 2,** a block diagram 200 illustrating an example, non-limiting embodiment of a transmission device is shown. The transmission device 101 or 102 includes a communications interface (I/F) 205, a transceiver 210 and a coupler 220.

[0074] In an example of operation, the communications interface 205 receives a communication signal 110 or 112 that includes data. In various embodiments, the communications interface 205 can include a wireless interface for receiving a wireless communication signal in accordance with a wireless standard protocol such as LTE or other

cellular voice and data protocol, WiFi or an 802.11 protocol, WIMAX protocol, Ultra Wideband protocol, Bluetooth protocol, Zigbee protocol, a direct broadcast satellite (DBS) or other satellite communication protocol or other wireless protocol. In addition or in the alternative, the communications interface 205 includes a wired interface that operates in accordance with an Ethernet protocol, universal serial bus (USB) protocol, a data over cable service interface specification (DOCSIS) protocol, a digital subscriber line (DSL) protocol, a Firewire (IEEE 1394) protocol, or other wired protocol. In additional to standards-based protocols, the communications interface 205 can operate in conjunction with other wired or wireless protocol. In addition, the communications interface 205 can optionally operate in conjunction with a protocol stack that includes multiple protocol layers including a MAC protocol, transport protocol, application protocol, etc.

[0075] In an example of operation, the transceiver 210 generates an electromagnetic wave based on the communication signal 110 or 112 to convey the data. The electromagnetic wave has at least one carrier frequency and at least one corresponding wavelength. The carrier frequency can be within a millimeter-wave frequency band of 30GHz – 300GHz, such as 60GHz or a carrier frequency in the range of 30-40GHz or a lower frequency band of 300 MHz – 30GHz in the microwave frequency range such as 26-30GHz, 11 GHz, 6 GHz or 3GHz, but it will be appreciated that other carrier frequencies are possible in other embodiments. In one mode of operation, the transceiver 210 merely upconverts the communications signal or signals 110 or 112 for transmission of the electromagnetic signal in the microwave or millimeter-wave band as a guided electromagnetic wave that is guided by or bound to the transmission medium 125. In another mode of operation, the communications interface 205 either converts the communication signal 110 or 112 to a baseband or near baseband signal or extracts the data from the communication signal 110 or 112 and the transceiver 210 modulates a high-frequency carrier with the data, the baseband or near baseband signal for transmission. It should be appreciated that the transceiver 210 can modulate the data received via the communication signal 110 or 112 to preserve one or more data communication protocols of the communication signal 110 or 112 either by encapsulation in the payload of a different protocol or by simple frequency shifting. In the alternative, the transceiver 210 can otherwise translate the data received via the communication signal 110 or 112 to a protocol that is different from the data communication protocol or protocols of the communication signal 110 or 112.

[0076] In an example of operation, the coupler 220 couples the electromagnetic wave to the transmission medium 125 as a guided electromagnetic wave to convey the communications

signal or signals 110 or 112. While the prior description has focused on the operation of the transceiver 210 as a transmitter, the transceiver 210 can also operate to receive electromagnetic waves that convey other data from the single wire transmission medium via the coupler 220 and to generate communications signals 110 or 112, via communications interface 205 that includes the other data. Consider embodiments where an additional guided electromagnetic wave conveys other data that also propagates along the transmission medium 125. The coupler 220 can also couple this additional electromagnetic wave from the transmission medium 125 to the transceiver 210 for reception.

[0077] The transmission device 101 or 102 includes an optional training controller 230. In an example embodiment, the training controller 230 is implemented by a standalone processor or a processor that is shared with one or more other components of the transmission device 101 or 102. The training controller 230 selects the carrier frequencies, modulation schemes and/or guided wave modes for the guided electromagnetic waves based on feedback data received by the transceiver 210 from at least one remote transmission device coupled to receive the guided electromagnetic wave.

[0078] In an example embodiment, a guided electromagnetic wave transmitted by a remote transmission device 101 or 102 conveys data that also propagates along the transmission medium 125. The data from the remote transmission device 101 or 102 can be generated to include the feedback data. In operation, the coupler 220 also couples the guided electromagnetic wave from the transmission medium 125 and the transceiver receives the electromagnetic wave and processes the electromagnetic wave to extract the feedback data.

[0079] In an example embodiment, the training controller 230 operates based on the feedback data to evaluate a plurality of candidate frequencies, modulation schemes and/or transmission modes to select a carrier frequency, modulation scheme and/or transmission mode to enhance performance, such as throughput, signal strength, reduce propagation loss, etc.

[0080] Consider the following example: a transmission device 101 begins operation under control of the training controller 230 by sending a plurality of guided waves as test signals such as pilot waves or other test signals at a corresponding plurality of candidate frequencies and/or candidate modes directed to a remote transmission device 102 coupled to the transmission medium 125. The guided waves can include, in addition or in the alternative, test data. The test data can indicate the particular candidate frequency and/or guide-wave mode of the signal. In an embodiment, the training controller 230 at the remote transmission device 102 receives the test signals and/or test data from any of the guided waves that were properly received and

determines the best candidate frequency and/or guided wave mode, a set of acceptable candidate frequencies and/or guided wave modes, or a rank ordering of candidate frequencies and/or guided wave modes. This selection of candidate frequenc(ies) or/and guided-mode(s) are generated by the training controller 230 based on one or more optimizing criteria such as received signal strength, bit error rate, packet error rate, signal to noise ratio, propagation loss, etc. The training controller 230 generates feedback data that indicates the selection of candidate frequenc(ies) or/and guided wave mode(s) and sends the feedback data to the transceiver 210 for transmission to the transmission device 101. The transmission device 101 and 102 can then communicate data with one another based on the selection of candidate frequenc(ies) or/and guided wave mode(s).

[0081] In other embodiments, the guided electromagnetic waves that contain the test signals and/or test data are reflected back, repeated back or otherwise looped back by the remote transmission device 102 to the transmission device 101 for reception and analysis by the training controller 230 of the transmission device 101 that initiated these waves. For example, the transmission device 101 can send a signal to the remote transmission device 102 to initiate a test mode where a physical reflector is switched on the line, a termination impedance is changed to cause reflections, a loop back mode is switched on to couple electromagnetic waves back to the source transmission device 102, and/or a repeater mode is enabled to amplify and retransmit the electromagnetic waves back to the source transmission device 102. The training controller 230 at the source transmission device 102 receives the test signals and/or test data from any of the guided waves that were properly received and determines selection of candidate frequenc(ies) or/and guided wave mode(s).

[0082] While the procedure above has been described in a start-up or initialization mode of operation, each transmission device 101 or 102 can send test signals, evaluate candidate frequencies or guided wave modes via non-test such as normal transmissions or otherwise evaluate candidate frequencies or guided wave modes at other times or continuously as well. In an example embodiment, the communication protocol between the transmission devices 101 and 102 can include an on-request or periodic test mode where either full testing or more limited testing of a subset of candidate frequencies and guided wave modes are tested and evaluated. In other modes of operation, the re-entry into such a test mode can be triggered by a degradation of performance due to a disturbance, weather conditions, etc. In an example embodiment, the receiver bandwidth of the transceiver 210 is either sufficiently wide or swept to receive all candidate frequencies or can be selectively adjusted by the training controller 230

to a training mode where the receiver bandwidth of the transceiver 210 is sufficiently wide or swept to receive all candidate frequencies.

[0083] Referring now to **FIG. 3,** a graphical diagram 300 illustrating an example, non-limiting embodiment of an electromagnetic field distribution is shown. In this embodiment, a transmission medium 125 in air includes an inner conductor 301 and an insulating jacket 302 of dielectric material, as shown in cross section. The diagram 300 includes different gray-scales that represent differing electromagnetic field strengths generated by the propagation of the guided wave having an asymmetrical and non-fundamental guided wave mode.

[0084] In particular, the electromagnetic field distribution corresponds to a modal "sweet spot" that enhances guided electromagnetic wave propagation along an insulated transmission medium and reduces end-to-end transmission loss. In this particular mode, electromagnetic waves are guided by the transmission medium 125 to propagate along an outer surface of the transmission medium – in this case, the outer surface of the insulating jacket 302. Electromagnetic waves are partially embedded in the insulator and partially radiating on the outer surface of the insulator. In this fashion, electromagnetic waves are "lightly" coupled to the insulator so as to enable electromagnetic wave propagation at long distances with low propagation loss.

[0085] As shown, the guided wave has a field structure that lies primarily or substantially outside of the transmission medium 125 that serves to guide the electromagnetic waves. The regions inside the conductor 301 have little or no field. Likewise regions inside the insulating jacket 302 have low field strength. The majority of the electromagnetic field strength is distributed in the lobes 304 at the outer surface of the insulating jacket 302 and in close proximity thereof. The presence of an asymmetric guided wave mode is shown by the high electromagnetic field strengths at the top and bottom of the outer surface of the insulating jacket 302 (in the orientation of the diagram) – as opposed to very small field strengths on the other sides of the insulating jacket 302.

[0086] The example shown corresponds to a 38 GHz electromagnetic wave guided by a wire with a diameter of 1.1 cm and a dielectric insulation of thickness of 0.36 cm. Because the electromagnetic wave is guided by the transmission medium 125 and the majority of the field strength is concentrated in the air outside of the insulating jacket 302 within a limited distance of the outer surface, the guided wave can propagate longitudinally down the transmission medium 125 with very low loss. In the example shown, this "limited distance" corresponds to a distance from the outer surface that is less than half the largest cross sectional dimension of

the transmission medium 125. In this case, the largest cross sectional dimension of the wire corresponds to the overall diameter of 1.82 cm, however, this value can vary with the size and shape of the transmission medium 125. For example, should the transmission medium 125 be of a rectangular shape with a height of .3cm and a width of .4cm, the largest cross sectional dimension would be the diagonal of .5cm and the corresponding limited distance would be .25cm. The dimensions of the area containing the majority of the field strength also vary with the frequency, and in general, increase as carrier frequencies decrease.

[0087] It should also be noted that the components of a guided wave communication system, such as couplers and transmission media can have their own cut-off frequencies for each guided wave mode. The cut-off frequency generally sets forth the lowest frequency that a particular guided wave mode is designed to be supported by that particular component. In an example embodiment, the particular asymmetric mode of propagation shown is induced on the transmission medium 125 by an electromagnetic wave having a frequency that falls within a limited range (such as Fc to $2Fc$) of the lower cut-off frequency Fc for this particular asymmetric mode. The lower cut-off frequency Fc is particular to the characteristics of transmission medium 125. For embodiments as shown that include an inner conductor 301 surrounded by an insulating jacket 302, this cutoff frequency can vary based on the dimensions and properties of the insulating jacket 302 and potentially the dimensions and properties of the inner conductor 301 and can be determined experimentally to have a desired mode pattern. It should be noted however, that similar effects can be found for a hollow dielectric or insulator without an inner conductor. In this case, the cutoff frequency can vary based on the dimensions and properties of the hollow dielectric or insulator.

[0088] At frequencies lower than the lower cut-off frequency, the asymmetric mode is difficult to induce in the transmission medium 125 and fails to propagate for all but trivial distances. As the frequency increases above the limited range of frequencies about the cut-off frequency, the asymmetric mode shifts more and more inward of the insulating jacket 302. At frequencies much larger than the cut-off frequency, the field strength is no longer concentrated outside of the insulating jacket, but primarily inside of the insulating jacket 302. While the transmission medium 125 provides strong guidance to the electromagnetic wave and propagation is still possible, ranges are more limited by increased losses due to propagation within the insulating jacket 302 -- as opposed to the surrounding air.

[0089] Referring now to **FIG. 4,** a graphical diagram 400 illustrating an example, non-limiting embodiment of an electromagnetic field distribution is shown. In particular, a cross

section diagram 400, similar to **FIG. 3** is shown with common reference numerals used to refer to similar elements. The example shown corresponds to a 60 GHz wave guided by a wire with a diameter of 1.1 cm and a dielectric insulation of thickness of 0.36 cm. Because the frequency of the guided wave is above the limited range of the cut-off frequency of this particular asymmetric mode, much of the field strength has shifted inward of the insulating jacket 302. In particular, the field strength is concentrated primarily inside of the insulating jacket 302. While the transmission medium 125 provides strong guidance to the electromagnetic wave and propagation is still possible, ranges are more limited when compared with the embodiment of **FIG. 3,** by increased losses due to propagation within the insulating jacket 302.

[0090] Referring now to **FIG. 5A**, a graphical diagram illustrating an example, non-limiting embodiment of a frequency response is shown. In particular, diagram 500 presents a graph of end-to-end loss (in dB) as a function of frequency, overlaid with electromagnetic field distributions 510, 520 and 530 at three points for a 200cm insulated medium voltage wire. The boundary between the insulator and the surrounding air is represented by reference numeral 525 in each electromagnetic field distribution.

[0091] As discussed in conjunction with **FIG. 3**, an example of a desired asymmetric mode of propagation shown is induced on the transmission medium 125 by an electromagnetic wave having a frequency that falls within a limited range (such as Fc to $2Fc$) of the lower cut-off frequency Fc of the transmission medium for this particular asymmetric mode. In particular, the electromagnetic field distribution 520 at 6 GHz falls within this modal "sweet spot" that enhances electromagnetic wave propagation along an insulated transmission medium and reduces end-to-end transmission loss. In this particular mode, guided waves are partially embedded in the insulator and partially radiating on the outer surface of the insulator. In this fashion, the electromagnetic waves are "lightly" coupled to the insulator so as to enable guided electromagnetic wave propagation at long distances with low propagation loss.

[0092] At lower frequencies represented by the electromagnetic field distribution 510 at 3 GHz, the asymmetric mode radiates more heavily generating higher propagation losses. At higher frequencies represented by the electromagnetic field distribution 530 at 9 GHz, the asymmetric mode shifts more and more inward of the insulating jacket providing too much absorption, again generating higher propagation losses.

[0093] Referring now to **FIG. 5B**, a graphical diagram 550 illustrating example, non-limiting embodiments of a longitudinal cross-section of a transmission medium 125, such as an insulated wire, depicting fields of guided electromagnetic waves at various operating

frequencies is shown. As shown in diagram 556, when the guided electromagnetic waves are at approximately the cutoff frequency (f_c) corresponding to the modal "sweet spot", the guided electromagnetic waves are loosely coupled to the insulated wire so that absorption is reduced, and the fields of the guided electromagnetic waves are bound sufficiently to reduce the amount radiated into the environment (e.g., air). Because absorption and radiation of the fields of the guided electromagnetic waves is low, propagation losses are consequently low, enabling the guided electromagnetic waves to propagate for longer distances.

[0094] As shown in diagram 554, propagation losses increase when an operating frequency of the guide electromagnetic waves increases above about two-times the cutoff frequency (f_c)—or as referred to, above the range of the "sweet spot". More of the field strength of the electromagnetic wave is driven inside the insulating layer, increasing propagation losses. At frequencies much higher than the cutoff frequency (f_c) the guided electromagnetic waves are strongly bound to the insulated wire as a result of the fields emitted by the guided electromagnetic waves being concentrated in the insulation layer of the wire, as shown in diagram 552. This in turn raises propagation losses further due to absorption of the guided electromagnetic waves by the insulation layer. Similarly, propagation losses increase when the operating frequency of the guided electromagnetic waves is substantially below the cutoff frequency (f_c), as shown in diagram 558. At frequencies much lower than the cutoff frequency (f_c) the guided electromagnetic waves are weakly (or nominally) bound to the insulated wire and thereby tend to radiate into the environment (e.g., air), which in turn, raises propagation losses due to radiation of the guided electromagnetic waves.

[0095] Referring now to **FIG. 6,** a graphical diagram 600 illustrating an example, non-limiting embodiment of an electromagnetic field distribution is shown. In this embodiment, a transmission medium 602 is a bare wire, as shown in cross section. The diagram 300 includes different gray-scales that represent differing electromagnetic field strengths generated by the propagation of a guided wave having a symmetrical and fundamental guided wave mode at a single carrier frequency.

[0096] In this particular mode, electromagnetic waves are guided by the transmission medium 602 to propagate along an outer surface of the transmission medium – in this case, the outer surface of the bare wire. Electromagnetic waves are "lightly" coupled to the wire so as to enable electromagnetic wave propagation at long distances with low propagation loss. As shown, the guided wave has a field structure that lies substantially outside of the transmission

medium 602 that serves to guide the electromagnetic waves. The regions inside the conductor 602 have little or no field.

[0097] Referring now to **FIG. 7,** a block diagram 700 illustrating an example, non-limiting embodiment of an arc coupler is shown. In particular a coupling device is presented for use in a transmission device, such as transmission device 101 or 102 presented in conjunction with FIG. 1. The coupling device includes an arc coupler 704 coupled to a transmitter circuit 712 and termination or damper 714. The arc coupler 704 can be made of a dielectric material, or other low-loss insulator (e.g., Teflon, polyethylene, etc.), or made of a conducting (e.g., metallic, non-metallic, etc.) material, or any combination of the foregoing materials. As shown, the arc coupler 704 operates as a waveguide and has a wave 706 propagating as a guided wave about a waveguide surface of the arc coupler 704. In the embodiment shown, at least a portion of the arc coupler 704 can be placed near a wire 702 or other transmission medium, (such as transmission medium 125), in order to facilitate coupling between the arc coupler 704 and the wire 702 or other transmission medium, as described herein to launch the guided wave 708 on the wire. The arc coupler 704 can be placed such that a portion of the curved arc coupler 704 is tangential to, and parallel or substantially parallel to the wire 702. The portion of the arc coupler 704 that is parallel to the wire can be an apex of the curve, or any point where a tangent of the curve is parallel to the wire 702. When the arc coupler 704 is positioned or placed thusly, the wave 706 travelling along the arc coupler 704 couples, at least in part, to the wire 702, and propagates as guided wave 708 around or about the wire surface of the wire 702 and longitudinally along the wire 702. The guided wave 708 can be characterized as a surface wave or other electromagnetic wave that is guided by or bound to the wire 702 or other transmission medium.

[0098] A portion of the wave 706 that does not couple to the wire 702 propagates as a wave 710 along the arc coupler 704. It will be appreciated that the arc coupler 704 can be configured and arranged in a variety of positions in relation to the wire 702 to achieve a desired level of coupling or non-coupling of the wave 706 to the wire 702. For example, the curvature and/or length of the arc coupler 704 that is parallel or substantially parallel, as well as its separation distance (which can include zero separation distance in an embodiment), to the wire 702 can be varied without departing from example embodiments. Likewise, the arrangement of arc coupler 704 in relation to the wire 702 may be varied based upon considerations of the respective intrinsic characteristics (e.g., thickness, composition, electromagnetic properties,

etc.) of the wire 702 and the arc coupler 704, as well as the characteristics (e.g., frequency, energy level, etc.) of the waves 706 and 708.

[0099] The guided wave 708 stays parallel or substantially parallel to the wire 702, even as the wire 702 bends and flexes. Bends in the wire 702 can increase transmission losses, which are also dependent on wire diameters, frequency, and materials. If the dimensions of the arc coupler 704 are chosen for efficient power transfer, most of the power in the wave 706 is transferred to the wire 702, with little power remaining in wave 710. It will be appreciated that the guided wave 708 can still be multi-modal in nature (discussed herein), including having modes that are non-fundamental or asymmetric, while traveling along a path that is parallel or substantially parallel to the wire 702, with or without a fundamental transmission mode. In an embodiment, non-fundamental or asymmetric modes can be utilized to minimize transmission losses and/or obtain increased propagation distances.

[0100] It is noted that the term parallel is generally a geometric construct which often is not exactly achievable in real systems. Accordingly, the term parallel as utilized in the subject disclosure represents an approximation rather than an exact configuration when used to describe embodiments disclosed in the subject disclosure. In an embodiment, substantially parallel can include approximations that are within 30 degrees of true parallel in all dimensions.

[0101] In an embodiment, the wave 706 can exhibit one or more wave propagation modes. The arc coupler modes can be dependent on the shape and/or design of the coupler 704. The one or more arc coupler modes of wave 706 can generate, influence, or impact one or more wave propagation modes of the guided wave 708 propagating along wire 702. It should be particularly noted however that the guided wave modes present in the guided wave 706 may be the same or different from the guided wave modes of the guided wave 708. In this fashion, one or more guided wave modes of the guided wave 706 may not be transferred to the guided wave 708, and further one or more guided wave modes of guided wave 708 may not have been present in guided wave 706. It should also be noted that the cut-off frequency of the arc coupler 704 for a particular guided wave mode may be different than the cutoff frequency of the wire 702 or other transmission medium for that same mode. For example, while the wire 702 or other transmission medium may be operated slightly above its cutoff frequency for a particular guided wave mode, the arc coupler 704 may be operated well above its cut-off frequency for that same mode for low loss, slightly below its cut-off frequency for that same mode to, for example, induce greater coupling and power transfer, or some other point in relation to the arc coupler's cutoff frequency for that mode.

[0102] In an embodiment, the wave propagation modes on the wire 702 can be similar to the arc coupler modes since both waves 706 and 708 propagate about the outside of the arc coupler 704 and wire 702 respectively. In some embodiments, as the wave 706 couples to the wire 702, the modes can change form, or new modes can be created or generated, due to the coupling between the arc coupler 704 and the wire 702. For example, differences in size, material, and/or impedances of the arc coupler 704 and wire 702 may create additional modes not present in the arc coupler modes and/or suppress some of the arc coupler modes. The wave propagation modes can comprise the fundamental transverse electromagnetic mode (Quasi-TEM_{00}), where only small electric and/or magnetic fields extend in the direction of propagation, and the electric and magnetic fields extend radially outwards while the guided wave propagates along the wire. This guided wave mode can be donut shaped, where few of the electromagnetic fields exist within the arc coupler 704 or wire 702.

[0103] Waves 706 and 708 can comprise a fundamental TEM mode where the fields extend radially outwards, and also comprise other, non-fundamental (e.g., asymmetric, higher-level, etc.) modes. While particular wave propagation modes are discussed above, other wave propagation modes are likewise possible such as transverse electric (TE) and transverse magnetic (TM) modes, based on the frequencies employed, the design of the arc coupler 704, the dimensions and composition of the wire 702, as well as its surface characteristics, its insulation if present, the electromagnetic properties of the surrounding environment, etc. It should be noted that, depending on the frequency, the electrical and physical characteristics of the wire 702 and the particular wave propagation modes that are generated, guided wave 708 can travel along the conductive surface of an oxidized uninsulated wire, an unoxidized uninsulated wire, an insulated wire and/or along the insulating surface of an insulated wire.

[0104] In an embodiment, a diameter of the arc coupler 704 is smaller than the diameter of the wire 702. For the millimeter-band wavelength being used, the arc coupler 704 supports a single waveguide mode that makes up wave 706. This single waveguide mode can change as it couples to the wire 702 as guided wave 708. If the arc coupler 704 were larger, more than one waveguide mode can be supported, but these additional waveguide modes may not couple to the wire 702 as efficiently, and higher coupling losses can result. However, in some alternative embodiments, the diameter of the arc coupler 704 can be equal to or larger than the diameter of the wire 702, for example, where higher coupling losses are desirable or when used in conjunction with other techniques to otherwise reduce coupling losses (e.g., impedance matching with tapering, etc.).

[0105] In an embodiment, the wavelength of the waves 706 and 708 are comparable in size, or smaller than a circumference of the arc coupler 704 and the wire 702. In an example, if the wire 702 has a diameter of 0.5 cm, and a corresponding circumference of around 1.5 cm, the wavelength of the transmission is around 1.5 cm or less, corresponding to a frequency of 70 GHz or greater. In another embodiment, a suitable frequency of the transmission and the carrier-wave signal is in the range of 30 – 100 GHz, perhaps around 30-60 GHz, and around 38 GHz in one example. In an embodiment, when the circumference of the arc coupler 704 and wire 702 is comparable in size to, or greater, than a wavelength of the transmission, the waves 706 and 708 can exhibit multiple wave propagation modes including fundamental and/or non-fundamental (symmetric and/or asymmetric) modes that propagate over sufficient distances to support various communication systems described herein. The waves 706 and 708 can therefore comprise more than one type of electric and magnetic field configuration. In an embodiment, as the guided wave 708 propagates down the wire 702, the electrical and magnetic field configurations will remain the same from end to end of the wire 702. In other embodiments, as the guided wave 708 encounters interference (distortion or obstructions) or loses energy due to transmission losses or scattering, the electric and magnetic field configurations can change as the guided wave 708 propagates down wire 702.

[0106] In an embodiment, the arc coupler 704 can be composed of nylon, Teflon, polyethylene, a polyamide, or other plastics. In other embodiments, other dielectric materials are possible. The wire surface of wire 702 can be metallic with either a bare metallic surface, or can be insulated using plastic, dielectric, insulator or other coating, jacket or sheathing. In an embodiment, a dielectric or otherwise non-conducting/insulated waveguide can be paired with either a bare/metallic wire or insulated wire. In other embodiments, a metallic and/or conductive waveguide can be paired with a bare/metallic wire or insulated wire. In an embodiment, an oxidation layer on the bare metallic surface of the wire 702 (e.g., resulting from exposure of the bare metallic surface to oxygen/air) can also provide insulating or dielectric properties similar to those provided by some insulators or sheathings.

[0107] It is noted that the graphical representations of waves 706, 708 and 710 are presented merely to illustrate the principles that wave 706 induces or otherwise launches a guided wave 708 on a wire 702 that operates, for example, as a single wire transmission line. Wave 710 represents the portion of wave 706 that remains on the arc coupler 704 after the generation of guided wave 708. The actual electric and magnetic fields generated as a result of such wave propagation may vary depending on the frequencies employed, the particular

wave propagation mode or modes, the design of the arc coupler 704, the dimensions and composition of the wire 702, as well as its surface characteristics, its optional insulation, the electromagnetic properties of the surrounding environment, etc.

[0108] It is noted that arc coupler 704 can include a termination circuit or damper 714 at the end of the arc coupler 704 that can absorb leftover radiation or energy from wave 710. The termination circuit or damper 714 can prevent and/or minimize the leftover radiation or energy from wave 710 reflecting back toward transmitter circuit 712. In an embodiment, the termination circuit or damper 714 can include termination resistors, and/or other components that perform impedance matching to attenuate reflection. In some embodiments, if the coupling efficiencies are high enough, and/or wave 710 is sufficiently small, it may not be necessary to use a termination circuit or damper 714. For the sake of simplicity, these transmitter 712 and termination circuits or dampers 714 may not be depicted in the other figures, but in those embodiments, transmitter and termination circuits or dampers may possibly be used.

[0109] Further, while a single arc coupler 704 is presented that generates a single guided wave 708, multiple arc couplers 704 placed at different points along the wire 702 and/or at different azimuthal orientations about the wire can be employed to generate and receive multiple guided waves 708 at the same or different frequencies, at the same or different phases, at the same or different wave propagation modes.

[0110] **FIG. 8,** a block diagram 800 illustrating an example, non-limiting embodiment of an arc coupler is shown. In the embodiment shown, at least a portion of the coupler 704 can be placed near a wire 702 or other transmission medium, (such as transmission medium 125), in order to facilitate coupling between the arc coupler 704 and the wire 702 or other transmission medium, to extract a portion of the guided wave 806 as a guided wave 808 as described herein. The arc coupler 704 can be placed such that a portion of the curved arc coupler 704 is tangential to, and parallel or substantially parallel to the wire 702. The portion of the arc coupler 704 that is parallel to the wire can be an apex of the curve, or any point where a tangent of the curve is parallel to the wire 702. When the arc coupler 704 is positioned or placed thusly, the wave 806 travelling along the wire 702 couples, at least in part, to the arc coupler 704, and propagates as guided wave 808 along the arc coupler 704 to a receiving device (not expressly shown). A portion of the wave 806 that does not couple to the arc coupler propagates as wave 810 along the wire 702 or other transmission medium.

[0111] In an embodiment, the wave 806 can exhibit one or more wave propagation modes. The arc coupler modes can be dependent on the shape and/or design of the coupler 704. The

one or more modes of guided wave 806 can generate, influence, or impact one or more guide-wave modes of the guided wave 808 propagating along the arc coupler 704. It should be particularly noted however that the guided wave modes present in the guided wave 806 may be the same or different from the guided wave modes of the guided wave 808. In this fashion, one or more guided wave modes of the guided wave 806 may not be transferred to the guided wave 808, and further one or more guided wave modes of guided wave 808 may not have been present in guided wave 806.

[0112] Referring now to **FIG. 9A,** a block diagram 900 illustrating an example, non-limiting embodiment of a stub coupler is shown. In particular a coupling device that includes stub coupler 904 is presented for use in a transmission device, such as transmission device 101 or 102 presented in conjunction with FIG. 1. The stub coupler 904 can be made of a dielectric material, or other low-loss insulator (e.g., Teflon, polyethylene and etc.), or made of a conducting (e.g., metallic, non-metallic, etc.) material, or any combination of the foregoing materials. As shown, the stub coupler 904 operates as a waveguide and has a wave 906 propagating as a guided wave about a waveguide surface of the stub coupler 904. In the embodiment shown, at least a portion of the stub coupler 904 can be placed near a wire 702 or other transmission medium, (such as transmission medium 125), in order to facilitate coupling between the stub coupler 904 and the wire 702 or other transmission medium, as described herein to launch the guided wave 908 on the wire.

[0113] In an embodiment, the stub coupler 904 is curved, and an end of the stub coupler 904 can be tied, fastened, or otherwise mechanically coupled to a wire 702. When the end of the stub coupler 904 is fastened to the wire 702, the end of the stub coupler 904 is parallel or substantially parallel to the wire 702. Alternatively, another portion of the dielectric waveguide beyond an end can be fastened or coupled to wire 702 such that the fastened or coupled portion is parallel or substantially parallel to the wire 702. The fastener 910 can be a nylon cable tie or other type of non-conducting/dielectric material that is either separate from the stub coupler 904 or constructed as an integrated component of the stub coupler 904. The stub coupler 904 can be adjacent to the wire 702 without surrounding the wire 702.

[0114] Like the arc coupler 704 described in conjunction with FIG. 7, when the stub coupler 904 is placed with the end parallel to the wire 702, the guided wave 906 travelling along the stub coupler 904 couples to the wire 702, and propagates as guided wave 908 about the wire surface of the wire 702. In an example embodiment, the guided wave 908 can be characterized as a surface wave or other electromagnetic wave.

[0115] It is noted that the graphical representations of waves 906 and 908 are presented merely to illustrate the principles that wave 906 induces or otherwise launches a guided wave 908 on a wire 702 that operates, for example, as a single wire transmission line. The actual electric and magnetic fields generated as a result of such wave propagation may vary depending on one or more of the shape and/or design of the coupler, the relative position of the dielectric waveguide to the wire, the frequencies employed, the design of the stub coupler 904, the dimensions and composition of the wire 702, as well as its surface characteristics, its optional insulation, the electromagnetic properties of the surrounding environment, etc.

[0116] In an embodiment, an end of stub coupler 904 can taper towards the wire 702 in order to increase coupling efficiencies. Indeed, the tapering of the end of the stub coupler 904 can provide impedance matching to the wire 702 and reduce reflections, according to an example embodiment of the subject disclosure. For example, an end of the stub coupler 904 can be gradually tapered in order to obtain a desired level of coupling between waves 906 and 908 as illustrated in **FIG. 9A**.

[0117] In an embodiment, the fastener 910 can be placed such that there is a short length of the stub coupler 904 between the fastener 910 and an end of the stub coupler 904. Maximum coupling efficiencies are realized in this embodiment when the length of the end of the stub coupler 904 that is beyond the fastener 910 is at least several wavelengths long for whatever frequency is being transmitted.

[0118] Turning now to **FIG. 9B,** a diagram 950 illustrating an example, non-limiting embodiment of an electromagnetic distribution in accordance with various aspects described herein is shown. In particular, an electromagnetic distribution is presented in two dimensions for a transmission device that includes coupler 952, shown in an example stub coupler constructed of a dielectric material. The coupler 952 couples an electromagnetic wave for propagation as a guided wave along an outer surface of a wire 702 or other transmission medium.

[0119] The coupler 952 guides the electromagnetic wave to a junction at x_0 via a symmetrical guided wave mode. While some of the energy of the electromagnetic wave that propagates along the coupler 952 is outside of the coupler 952, the majority of the energy of this electromagnetic wave is contained within the coupler 952. The junction at x_0 couples the electromagnetic wave to the wire 702 or other transmission medium at an azimuthal angle corresponding to the bottom of the transmission medium. This coupling induces an electromagnetic wave that is guided to propagate along the outer surface of the wire 702 or

other transmission medium via at least one guided wave mode in direction 956. The majority of the energy of the guided electromagnetic wave is outside or, but in close proximity to the outer surface of the wire 702 or other transmission medium. In the example shown, the junction at x_0 forms an electromagnetic wave that propagates via both a symmetrical mode and at least one asymmetrical surface mode, such as the first order mode presented in conjunction with **FIG. 3**, that skims the surface of the wire 702 or other transmission medium.

[0120] It is noted that the graphical representations of guided waves are presented merely to illustrate an example of guided wave coupling and propagation. The actual electric and magnetic fields generated as a result of such wave propagation may vary depending on the frequencies employed, the design and/or configuration of the coupler 952, the dimensions and composition of the wire 702 or other transmission medium, as well as its surface characteristics, its insulation if present, the electromagnetic properties of the surrounding environment, etc.

[0121] Turning now to **FIG. 10A**, illustrated is a block diagram 1000 of an example, non-limiting embodiment of a coupler and transceiver system in accordance with various aspects described herein. The system is an example of transmission device 101 or 102. In particular, the communication interface 1008 is an example of communications interface 205, the stub coupler 1002 is an example of coupler 220, and the transmitter/receiver device 1006, diplexer 1016, power amplifier 1014, low noise amplifier 1018, frequency mixers 1010 and 1020 and local oscillator 1012 collectively form an example of transceiver 210.

[0122] In operation, the transmitter/receiver device 1006 launches and receives waves (e.g., guided wave 1004 onto stub coupler 1002). The guided waves 1004 can be used to transport signals received from and sent to a host device, base station, mobile devices, a building or other device by way of a communications interface 1008. The communications interface 1008 can be an integral part of system 1000. Alternatively, the communications interface 1008 can be tethered to system 1000. The communications interface 1008 can comprise a wireless interface for interfacing to the host device, base station, mobile devices, a building or other device utilizing any of various wireless signaling protocols (e.g., LTE, WiFi, WiMAX, IEEE 802.xx, etc.) including an infrared protocol such as an infrared data association (IrDA) protocol or other line of sight optical protocol. The communications interface 1008 can also comprise a wired interface such as a fiber optic line, coaxial cable, twisted pair, category 5 (CAT-5) cable or other suitable wired or optical mediums for communicating with the host device, base station, mobile devices, a building or other device via a protocol such as an Ethernet protocol, universal serial bus (USB) protocol, a data over cable service interface

specification (DOCSIS) protocol, a digital subscriber line (DSL) protocol, a Firewire (IEEE 1394) protocol, or other wired or optical protocol. For embodiments where system 1000 functions as a repeater, the communications interface 1008 may not be necessary.

[0123] The output signals (e.g., Tx) of the communications interface 1008 can be combined with a carrier wave (e.g., millimeter-wave carrier wave) generated by a local oscillator 1012 at frequency mixer 1010. Frequency mixer 1010 can use heterodyning techniques or other frequency shifting techniques to frequency shift the output signals from communications interface 1008. For example, signals sent to and from the communications interface 1008 can be modulated signals such as orthogonal frequency division multiplexed (OFDM) signals formatted in accordance with a Long-Term Evolution (LTE) wireless protocol or other wireless 3G, 4G, 5G or higher voice and data protocol, a Zigbee, WIMAX, UltraWideband or IEEE 802.11 wireless protocol; a wired protocol such as an Ethernet protocol, universal serial bus (USB) protocol, a data over cable service interface specification (DOCSIS) protocol, a digital subscriber line (DSL) protocol, a Firewire (IEEE 1394) protocol or other wired or wireless protocol. In an example embodiment, this frequency conversion can be done in the analog domain, and as a result, the frequency shifting can be done without regard to the type of communications protocol used by a base station, mobile devices, or in-building devices. As new communications technologies are developed, the communications interface 1008 can be upgraded (e.g., updated with software, firmware, and/or hardware) or replaced and the frequency shifting and transmission apparatus can remain, simplifying upgrades. The carrier wave can then be sent to a power amplifier ("PA") 1014 and can be transmitted via the transmitter receiver device 1006 via the diplexer 1016.

[0124] Signals received from the transmitter/receiver device 1006 that are directed towards the communications interface 1008 can be separated from other signals via diplexer 1016. The received signal can then be sent to low noise amplifier ("LNA") 1018 for amplification. A frequency mixer 1020, with help from local oscillator 1012 can downshift the received signal (which is in the millimeter-wave band or around 38 GHz in some embodiments) to the native frequency. The communications interface 1008 can then receive the transmission at an input port (Rx).

[0125] In an embodiment, transmitter/receiver device 1006 can include a cylindrical or non-cylindrical metal (which, for example, can be hollow in an embodiment, but not necessarily drawn to scale) or other conducting or non-conducting waveguide and an end of the stub coupler 1002 can be placed in or in proximity to the waveguide or the

transmitter/receiver device 1006 such that when the transmitter/receiver device 1006 generates a transmission, the guided wave couples to stub coupler 1002 and propagates as a guided wave 1004 about the waveguide surface of the stub coupler 1002. In some embodiments, the guided wave 1004 can propagate in part on the outer surface of the stub coupler 1002 and in part inside the stub coupler 1002. In other embodiments, the guided wave 1004 can propagate substantially or completely on the outer surface of the stub coupler 1002. In yet other embodiments, the guided wave 1004 can propagate substantially or completely inside the stub coupler 1002. In this latter embodiment, the guided wave 1004 can radiate at an end of the stub coupler 1002 (such as the tapered end shown in FIG. 4) for coupling to a transmission medium such as a wire 702 of **FIG.** 7. Similarly, if guided wave 1004 is incoming (coupled to the stub coupler 1002 from a wire 702), guided wave 1004 then enters the transmitter / receiver device 1006 and couples to the cylindrical waveguide or conducting waveguide. While transmitter/receiver device 1006 is shown to include a separate waveguide -- an antenna, cavity resonator, klystron, magnetron, travelling wave tube, or other radiating element can be employed to induce a guided wave on the coupler 1002, with or without the separate waveguide.

[0126] In an embodiment, stub coupler 1002 can be wholly constructed of a dielectric material (or another suitable insulating material), without any metallic or otherwise conducting materials therein. Stub coupler 1002 can be composed of nylon, Teflon, polyethylene, a polyamide, other plastics, or other materials that are non-conducting and suitable for facilitating transmission of electromagnetic waves at least in part on an outer surface of such materials. In another embodiment, stub coupler 1002 can include a core that is conducting/metallic, and have an exterior dielectric surface. Similarly, a transmission medium that couples to the stub coupler 1002 for propagating electromagnetic waves induced by the stub coupler 1002 or for supplying electromagnetic waves to the stub coupler 1002 can, in addition to being a bare or insulated wire, be wholly constructed of a dielectric material (or another suitable insulating material), without any metallic or otherwise conducting materials therein.

[0127] It is noted that although **FIG. 10A** shows that the opening of transmitter receiver device 1006 is much wider than the stub coupler 1002, this is not to scale, and that in other embodiments the width of the stub coupler 1002 is comparable or slightly smaller than the opening of the hollow waveguide. It is also not shown, but in an embodiment, an end of the coupler 1002 that is inserted into the transmitter/receiver device 1006 tapers down in order to

reduce reflection and increase coupling efficiencies.

[0128] Before coupling to the stub coupler 1002, the one or more waveguide modes of the guided wave generated by the transmitter/receiver device 1006 can couple to the stub coupler 1002 to induce one or more wave propagation modes of the guided wave 1004. The wave propagation modes of the guided wave 1004 can be different than the hollow metal waveguide modes due to the different characteristics of the hollow metal waveguide and the dielectric waveguide. For instance, wave propagation modes of the guided wave 1004 can comprise the fundamental transverse electromagnetic mode (Quasi-TEM_{00}), where only small electrical and/or magnetic fields extend in the direction of propagation, and the electric and magnetic fields extend radially outwards from the stub coupler 1002 while the guided waves propagate along the stub coupler 1002. The fundamental transverse electromagnetic mode wave propagation mode may or may not exist inside a waveguide that is hollow. Therefore, the hollow metal waveguide modes that are used by transmitter/receiver device 1006 are waveguide modes that can couple effectively and efficiently to wave propagation modes of stub coupler 1002.

[0129] It will be appreciated that other constructs or combinations of the transmitter/receiver device 1006 and stub coupler 1002 are possible. For example, a stub coupler 1002' can be placed tangentially or in parallel (with or without a gap) with respect to an outer surface of the hollow metal waveguide of the transmitter/receiver device 1006' (corresponding circuitry not shown) as depicted by reference 1000' of FIG. 10B. In another embodiment, not shown by reference 1000', the stub coupler 1002' can be placed inside the hollow metal waveguide of the transmitter/receiver device 1006' without an axis of the stub coupler 1002' being coaxially aligned with an axis of the hollow metal waveguide of the transmitter/receiver device 1006'. In either of these embodiments, the guided wave generated by the transmitter/receiver device 1006' can couple to a surface of the stub coupler 1002' to induce one or more wave propagation modes of the guided wave 1004' on the stub coupler 1002' including a fundamental mode (e.g., a symmetric mode) and/or a non-fundamental mode (e.g., asymmetric mode).

[0130] In one embodiment, the guided wave 1004' can propagate in part on the outer surface of the stub coupler 1002' and in part inside the stub coupler 1002'. In another embodiment, the guided wave 1004' can propagate substantially or completely on the outer surface of the stub coupler 1002'. In yet other embodiments, the guided wave 1004' can propagate substantially or completely inside the stub coupler 1002'. In this latter embodiment,

the guided wave 1004' can radiate at an end of the stub coupler 1002' (such as the tapered end shown in FIG. 9) for coupling to a transmission medium such as a wire 702 of FIG. 9.

[0131] It will be further appreciated that other constructs the transmitter/receiver device 1006 are possible. For example, a hollow metal waveguide of a transmitter/receiver device 1006'' (corresponding circuitry not shown), depicted in FIG. 10B as reference 1000'', can be placed tangentially or in parallel (with or without a gap) with respect to an outer surface of a transmission medium such as the wire 702 of FIG. 4 without the use of the stub coupler 1002. In this embodiment, the guided wave generated by the transmitter/receiver device 1006'' can couple to a surface of the wire 702 to induce one or more wave propagation modes of a guided wave 908 on the wire 702 including a fundamental mode (e.g., a symmetric mode) and/or a non-fundamental mode (e.g., asymmetric mode). In another embodiment, the wire 702 can be positioned inside a hollow metal waveguide of a transmitter/receiver device 1006''' (corresponding circuitry not shown) so that an axis of the wire 702 is coaxially (or not coaxially) aligned with an axis of the hollow metal waveguide without the use of the stub coupler 1002—see FIGs. 10B reference 1000'''. In this embodiment, the guided wave generated by the transmitter/receiver device 1006''' can couple to a surface of the wire 702 to induce one or more wave propagation modes of a guided wave 908 on the wire including a fundamental mode (e.g., a symmetric mode) and/or a non-fundamental mode (e.g., asymmetric mode).

[0132] In the embodiments of 1000'' and 1000''', for a wire 702 having an insulated outer surface, the guided wave 908 can propagate in part on the outer surface of the insulator and in part inside the insulator. In embodiments, the guided wave 908 can propagate substantially or completely on the outer surface of the insulator, or substantially or completely inside the insulator. In the embodiments of 1000'' and 1000''', for a wire 702 that is a bare conductor, the guided wave 908 can propagate in part on the outer surface of the conductor and in part inside the conductor. In another embodiment, the guided wave 908 can propagate substantially or completely on the outer surface of the conductor.

[0133] Referring now to **FIG. 11,** a block diagram 1100 illustrating an example, non-limiting embodiment of a dual stub coupler is shown. In particular, a dual coupler design is presented for use in a transmission device, such as transmission device 101 or 102 presented in conjunction with **FIG. 1**. In an embodiment, two or more couplers (such as the stub couplers 1104 and 1106) can be positioned around a wire 1102 in order to receive guided wave 1108. In an embodiment, one coupler is enough to receive the guided wave 1108. In that case, guided

wave 1108 couples to coupler 1104 and propagates as guided wave 1110. If the field structure of the guided wave 1108 oscillates or undulates around the wire 1102 due to the particular guided wave mode(s) or various outside factors, then coupler 1106 can be placed such that guided wave 1108 couples to coupler 1106. In some embodiments, four or more couplers can be placed around a portion of the wire 1102, e.g., at 90 degrees or another spacing with respect to each other, in order to receive guided waves that may oscillate or rotate around the wire 1102, that have been induced at different azimuthal orientations or that have non-fundamental or higher order modes that, for example, have lobes and/or nulls or other asymmetries that are orientation dependent. However, it will be appreciated that there may be less than or more than four couplers placed around a portion of the wire 1102 without departing from example embodiments.

[0134] It should be noted that while couplers 1106 and 1104 are illustrated as stub couplers, any other of the coupler designs described herein including arc couplers, antenna or horn couplers, magnetic couplers, etc., could likewise be used. It will also be appreciated that while some example embodiments have presented a plurality of couplers around at least a portion of a wire 1102, this plurality of couplers can also be considered as part of a single coupler system having multiple coupler subcomponents. For example, two or more couplers can be manufactured as single system that can be installed around a wire in a single installation such that the couplers are either pre-positioned or adjustable relative to each other (either manually or automatically with a controllable mechanism such as a motor or other actuator) in accordance with the single system.

[0135] Receivers coupled to couplers 1106 and 1104 can use diversity combining to combine signals received from both couplers 1106 and 1104 in order to maximize the signal quality. In other embodiments, if one or the other of the couplers 1104 and 1106 receive a transmission that is above a predetermined threshold, receivers can use selection diversity when deciding which signal to use. Further, while reception by a plurality of couplers 1106 and 1104 is illustrated, transmission by couplers 1106 and 1104 in the same configuration can likewise take place. In particular, a wide range of multi-input multi-output (MIMO) transmission and reception techniques can be employed for transmissions where a transmission device, such as transmission device 101 or 102 presented in conjunction with **FIG. 1** includes multiple transceivers and multiple couplers.

[0136] It is noted that the graphical representations of waves 1108 and 1110 are presented merely to illustrate the principles that guided wave 1108 induces or otherwise launches a wave

1110 on a coupler 1104. The actual electric and magnetic fields generated as a result of such wave propagation may vary depending on the frequencies employed, the design of the coupler 1104, the dimensions and composition of the wire 1102, as well as its surface characteristics, its insulation if any, the electromagnetic properties of the surrounding environment, etc.

[0137] Referring now to **FIG. 12,** a block diagram 1200 illustrating an example, non-limiting embodiment of a repeater system is shown. In particular, a repeater device 1210 is presented for use in a transmission device, such as transmission device 101 or 102 presented in conjunction with **FIG. 1**. In this system, two couplers 1204 and 1214 can be placed near a wire 1202 or other transmission medium such that guided waves 1205 propagating along the wire 1202 are extracted by coupler 1204 as wave 1206 (e.g. as a guided wave), and then are boosted or repeated by repeater device 1210 and launched as a wave 1216 (e.g. as a guided wave) onto coupler 1214. The wave 1216 can then be launched on the wire 1202 and continue to propagate along the wire 1202 as a guided wave 1217. In an embodiment, the repeater device 1210 can receive at least a portion of the power utilized for boosting or repeating through magnetic coupling with the wire 1202, for example, when the wire 1202 is a power line or otherwise contains a power-carrying conductor. It should be noted that while couplers 1204 and 1214 are illustrated as stub couplers, any other of the coupler designs described herein including arc couplers, antenna or horn couplers, magnetic couplers, or the like, could likewise be used.

[0138] In some embodiments, repeater device 1210 can repeat the transmission associated with wave 1206, and in other embodiments, repeater device 1210 can include a communications interface 205 that extracts data or other signals from the wave 1206 for supplying such data or signals to another network and/or one or more other devices as communication signals 110 or 112 and/or receiving communication signals 110 or 112 from another network and/or one or more other devices and launch guided wave 1216 having embedded therein the received communication signals 110 or 112. In a repeater configuration, receiver waveguide 1208 can receive the wave 1206 from the coupler 1204 and transmitter waveguide 1212 can launch guided wave 1216 onto coupler 1214 as guided wave 1217. Between receiver waveguide 1208 and transmitter waveguide 1212, the signal embedded in guided wave 1206 and/or the guided wave 1216 itself can be amplified to correct for signal loss and other inefficiencies associated with guided wave communications or the signal can be received and processed to extract the data contained therein and regenerated for transmission. In an embodiment, the receiver waveguide 1208 can be configured to extract data from the

signal, process the data to correct for data errors utilizing for example error correcting codes, and regenerate an updated signal with the corrected data. The transmitter waveguide 1212 can then transmit guided wave 1216 with the updated signal embedded therein. In an embodiment, a signal embedded in guided wave 1206 can be extracted from the transmission and processed for communication with another network and/or one or more other devices via communications interface 205 as communication signals 110 or 112. Similarly, communication signals 110 or 112 received by the communications interface 205 can be inserted into a transmission of guided wave 1216 that is generated and launched onto coupler 1214 by transmitter waveguide 1212.

[0139] It is noted that although **FIG. 12** shows guided wave transmissions 1206 and 1216 entering from the left and exiting to the right respectively, this is merely a simplification and is not intended to be limiting. In other embodiments, receiver waveguide 1208 and transmitter waveguide 1212 can also function as transmitters and receivers respectively, allowing the repeater device 1210 to be bi-directional.

[0140] In an embodiment, repeater device 1210 can be placed at locations where there are discontinuities or obstacles on the wire 1202 or other transmission medium. In the case where the wire 1202 is a power line, these obstacles can include transformers, connections, utility poles, and other such power line devices. The repeater device 1210 can help the guided (e.g., surface) waves jump over these obstacles on the line and boost the transmission power at the same time. In other embodiments, a coupler can be used to jump over the obstacle without the use of a repeater device. In that embodiment, both ends of the coupler can be tied or fastened to the wire, thus providing a path for the guided wave to travel without being blocked by the obstacle.

[0141] Turning now to **FIG. 13**, illustrated is a block diagram 1300 of an example, non-limiting embodiment of a bidirectional repeater in accordance with various aspects described herein. In particular, a bidirectional repeater device 1306 is presented for use in a transmission device, such as transmission device 101 or 102 presented in conjunction with **FIG. 1**. It should be noted that while the couplers are illustrated as stub couplers, any other of the coupler designs described herein including arc couplers, antenna or horn couplers, magnetic couplers, or the like, could likewise be used. The bidirectional repeater 1306 can employ diversity paths in the case of when two or more wires or other transmission media are present. Since guided wave transmissions have different transmission efficiencies and coupling efficiencies for transmission medium of different types such as insulated wires, un-insulated wires or other types of transmission media and further, if exposed to the elements, can be affected by weather,

and other atmospheric conditions, it can be advantageous to selectively transmit on different transmission media at certain times. In various embodiments, the various transmission media can be designated as a primary, secondary, tertiary, etc. whether or not such designation indicates a preference of one transmission medium over another.

[0142] In the embodiment shown, the transmission media include an insulated or uninsulated wire 1302 and an insulated or uninsulated wire 1304 (referred to herein as wires 1302 and 1304, respectively). The repeater device 1306 uses a receiver coupler 1308 to receive a guided wave traveling along wire 1302 and repeats the transmission using transmitter waveguide 1310 as a guided wave along wire 1304. In other embodiments, repeater device 1306 can switch from the wire 1304 to the wire 1302, or can repeat the transmissions along the same paths. Repeater device 1306 can include sensors, or be in communication with sensors (or a network management system 1601 depicted in **FIG. 16A**) that indicate conditions that can affect the transmission. Based on the feedback received from the sensors, the repeater device 1306 can make the determination about whether to keep the transmission along the same wire, or transfer the transmission to the other wire.

[0143] Turning now to **FIG. 14**, illustrated is a block diagram 1400 illustrating an example, non-limiting embodiment of a bidirectional repeater system. In particular, a bidirectional repeater system is presented for use in a transmission device, such as transmission device 101 or 102 presented in conjunction with **FIG. 1**. The bidirectional repeater system includes waveguide coupling devices 1402 and 1404 that receive and transmit transmissions from other coupling devices located in a distributed antenna system or backhaul system.

[0144] In various embodiments, waveguide coupling device 1402 can receive a transmission from another waveguide coupling device, wherein the transmission has a plurality of subcarriers. Diplexer 1406 can separate the transmission from other transmissions, and direct the transmission to low-noise amplifier ("LNA") 1408. A frequency mixer 1428, with help from a local oscillator 1412, can downshift the transmission (which is in the millimeter-wave band or around 38 GHz in some embodiments) to a lower frequency, such as a cellular band (~1.9 GHz) for a distributed antenna system, a native frequency, or other frequency for a backhaul system. An extractor (or demultiplexer) 1432 can extract the signal on a subcarrier and direct the signal to an output component 1422 for optional amplification, buffering or isolation by power amplifier 1424 for coupling to communications interface 205. The communications interface 205 can further process the signals received from the power amplifier 1424 or otherwise transmit such signals over a wireless or wired interface to other

devices such as a base station, mobile devices, a building, etc. For the signals that are not being extracted at this location, extractor 1432 can redirect them to another frequency mixer 1436, where the signals are used to modulate a carrier wave generated by local oscillator 1414. The carrier wave, with its subcarriers, is directed to a power amplifier ("PA") 1416 and is retransmitted by waveguide coupling device 1404 to another system, via diplexer 1420.

[0145] An LNA 1426 can be used to amplify, buffer or isolate signals that are received by the communication interface 205 and then send the signal to a multiplexer 1434 which merges the signal with signals that have been received from waveguide coupling device 1404. The signals received from coupling device 1404 have been split by diplexer 1420, and then passed through LNA 1418, and downshifted in frequency by frequency mixer 1438. When the signals are combined by multiplexer 1434, they are upshifted in frequency by frequency mixer 1430, and then boosted by PA 1410, and transmitted to another system by waveguide coupling device 1402. In an embodiment bidirectional repeater system can be merely a repeater without the output device 1422. In this embodiment, the multiplexer 1434 would not be utilized and signals from LNA 1418 would be directed to mixer 1430 as previously described. It will be appreciated that in some embodiments, the bidirectional repeater system could also be implemented using two distinct and separate unidirectional repeaters. In an alternative embodiment, a bidirectional repeater system could also be a booster or otherwise perform retransmissions without downshifting and upshifting. Indeed in example embodiment, the retransmissions can be based upon receiving a signal or guided wave and performing some signal or guided wave processing or reshaping, filtering, and/or amplification, prior to retransmission of the signal or guided wave.

[0146] Referring now to **FIG. 15,** a block diagram 1500 illustrating an example, non-limiting embodiment of a guided wave communications system is shown. This diagram depicts an exemplary environment in which a guided wave communication system, such as the guided wave communication system presented in conjunction with **FIG. 1**, can be used.

[0147] To provide network connectivity to additional base station devices, a backhaul network that links the communication cells (e.g., microcells and macrocells) to network devices of a core network correspondingly expands. Similarly, to provide network connectivity to a distributed antenna system, an extended communication system that links base station devices and their distributed antennas is desirable. A guided wave communication system 1500 such as shown in FIG. 15 can be provided to enable alternative, increased or additional network connectivity and a waveguide coupling system can be provided to transmit and/or receive

guided wave (e.g., surface wave) communications on a transmission medium such as a wire that operates as a single-wire transmission line (e.g., a utility line), and that can be used as a waveguide and/or that otherwise operates to guide the transmission of an electromagnetic wave.

[0148] The guided wave communication system 1500 can comprise a first instance of a distribution system 1550 that includes one or more base station devices (e.g., base station device 1504) that are communicably coupled to a central office 1501 and/or a macrocell site 1502. Base station device 1504 can be connected by a wired (e.g., fiber and/or cable), or by a wireless (e.g., microwave wireless) connection to the macrocell site 1502 and the central office 1501. A second instance of the distribution system 1560 can be used to provide wireless voice and data services to mobile device 1522 and to residential and/or commercial establishments 1542 (herein referred to as establishments 1542). System 1500 can have additional instances of the distribution systems 1550 and 1560 for providing voice and/or data services to mobile devices 1522-1524 and establishments 1542 as shown in **FIG. 15**.

[0149] Macrocells such as macrocell site 1502 can have dedicated connections to a mobile network and base station device 1504 or can share and/or otherwise use another connection. Central office 1501 can be used to distribute media content and/or provide internet service provider (ISP) services to mobile devices 1522-1524 and establishments 1542. The central office 1501 can receive media content from a constellation of satellites 1530 (one of which is shown in FIG. 15) or other sources of content, and distribute such content to mobile devices 1522-1524 and establishments 1542 via the first and second instances of the distribution system 1550 and 1560. The central office 1501 can also be communicatively coupled to the Internet 1503 for providing internet data services to mobile devices 1522-1524 and establishments 1542.

[0150] Base station device 1504 can be mounted on, or attached to, utility pole 1516. In other embodiments, base station device 1504 can be near transformers and/or other locations situated nearby a power line. Base station device 1504 can facilitate connectivity to a mobile network for mobile devices 1522 and 1524. Antennas 1512 and 1514, mounted on or near utility poles 1518 and 1520, respectively, can receive signals from base station device 1504 and transmit those signals to mobile devices 1522 and 1524 over a much wider area than if the antennas 1512 and 1514 were located at or near base station device 1504.

[0151] It is noted that **FIG. 15** displays three utility poles, in each instance of the distribution systems 1550 and 1560, with one base station device, for purposes of simplicity.

In other embodiments, utility pole 1516 can have more base station devices, and more utility poles with distributed antennas and/or tethered connections to establishments 1542.

[0152] A transmission device 1506, such as transmission device 101 or 102 presented in conjunction with **FIG. 1**, can transmit a signal from base station device 1504 to antennas 1512 and 1514 via utility or power line(s) that connect the utility poles 1516, 1518, and 1520. To transmit the signal, radio source and/or transmission device 1506 upconverts the signal (e.g., via frequency mixing) from base station device 1504 or otherwise converts the signal from the base station device 1504 to a microwave band signal and the transmission device 1506 launches a microwave band wave that propagates as a guided wave traveling along the utility line or other wire as described in previous embodiments. At utility pole 1518, another transmission device 1508 receives the guided wave (and optionally can amplify it as needed or desired or operate as a repeater to receive it and regenerate it) and sends it forward as a guided wave on the utility line or other wire. The transmission device 1508 can also extract a signal from the microwave band guided wave and shift it down in frequency or otherwise convert it to its original cellular band frequency (e.g., 1.9 GHz or other defined cellular frequency) or another cellular (or non-cellular) band frequency. An antenna 1512 can wireless transmit the downshifted signal to mobile device 1522. The process can be repeated by transmission device 1510, antenna 1514 and mobile device 1524, as necessary or desirable.

[0153] Transmissions from mobile devices 1522 and 1524 can also be received by antennas 1512 and 1514 respectively. The transmission devices 1508 and 1510 can upshift or otherwise convert the cellular band signals to microwave band and transmit the signals as guided wave (e.g., surface wave or other electromagnetic wave) transmissions over the power line(s) to base station device 1504.

[0154] Media content received by the central office 1501 can be supplied to the second instance of the distribution system 1560 via the base station device 1504 for distribution to mobile devices 1522 and establishments 1542. The transmission device 1510 can be tethered to the establishments 1542 by one or more wired connections or a wireless interface. The one or more wired connections may include without limitation, a power line, a coaxial cable, a fiber cable, a twisted pair cable, a guided wave transmission medium or other suitable wired mediums for distribution of media content and/or for providing internet services. In an example embodiment, the wired connections from the transmission device 1510 can be communicatively coupled to one or more very high bit rate digital subscriber line (VDSL) modems located at one or more corresponding service area interfaces (SAIs – not shown) or

pedestals, each SAI or pedestal providing services to a portion of the establishments 1542. The VDSL modems can be used to selectively distribute media content and/or provide internet services to gateways (not shown) located in the establishments 1542. The SAIs or pedestals can also be communicatively coupled to the establishments 1542 over a wired medium such as a power line, a coaxial cable, a fiber cable, a twisted pair cable, a guided wave transmission medium or other suitable wired mediums. In other example embodiments, the transmission device 1510 can be communicatively coupled directly to establishments 1542 without intermediate interfaces such as the SAIs or pedestals.

[0155] In another example embodiment, system 1500 can employ diversity paths, where two or more utility lines or other wires are strung between the utility poles 1516, 1518, and 1520 (e.g., for example, two or more wires between poles 1516 and 1520) and redundant transmissions from base station/macrocell site 1502 are transmitted as guided waves down the surface of the utility lines or other wires. The utility lines or other wires can be either insulated or uninsulated, and depending on the environmental conditions that cause transmission losses, the coupling devices can selectively receive signals from the insulated or uninsulated utility lines or other wires. The selection can be based on measurements of the signal-to-noise ratio of the wires, or based on determined weather/environmental conditions (e.g., moisture detectors, weather forecasts, etc.). The use of diversity paths with system 1500 can enable alternate routing capabilities, load balancing, increased load handling, concurrent bi-directional or synchronous communications, spread spectrum communications, etc.

[0156] It is noted that the use of the transmission devices 1506, 1508, and 1510 in **FIG. 15** are by way of example only, and that in other embodiments, other uses are possible. For instance, transmission devices can be used in a backhaul communication system, providing network connectivity to base station devices. Transmission devices 1506, 1508, and 1510 can be used in many circumstances where it is desirable to transmit guided wave communications over a wire, whether insulated or not insulated. Transmission devices 1506, 1508, and 1510 are improvements over other coupling devices due to no contact or limited physical and/or electrical contact with the wires that may carry high voltages. The transmission device can be located away from the wire (e.g., spaced apart from the wire) and/or located on the wire so long as it is not electrically in contact with the wire, as the dielectric acts as an insulator, allowing for cheap, easy, and/or less complex installation. However, as previously noted conducting or non-dielectric couplers can be employed, for example in configurations where the wires correspond to a telephone network, cable television network, broadband data service, fiber

optic communications system or other network employing low voltages or having insulated transmission lines.

[0157] It is further noted, that while base station device 1504 and macrocell site 1502 are illustrated in an embodiment, other network configurations are likewise possible. For example, devices such as access points or other wireless gateways can be employed in a similar fashion to extend the reach of other networks such as a wireless local area network, a wireless personal area network or other wireless network that operates in accordance with a communication protocol such as a 802.11 protocol, WIMAX protocol, UltraWideband protocol, Bluetooth protocol, Zigbee protocol or other wireless protocol.

[0158] Referring now to **FIGs. 16A & 16B,** block diagrams illustrating an example, non-limiting embodiment of a system for managing a power grid communication system are shown. Considering **FIG. 16A**, a waveguide system 1602 is presented for use in a guided wave communications system, such as the system presented in conjunction with **FIG. 15**. The waveguide system 1602 can comprise sensors 1604, a power management system 1605, a transmission device 101 or 102 that includes at least one communication interface 205, transceiver 210 and coupler 220.

[0159] The waveguide system 1602 can be coupled to a power line 1610 for facilitating guided wave communications in accordance with embodiments described in the subject disclosure. In an example embodiment, the transmission device 101 or 102 includes coupler 220 for inducing electromagnetic waves on a surface of the power line 1610 that longitudinally propagate along the surface of the power line 1610 as described in the subject disclosure. The transmission device 101 or 102 can also serve as a repeater for retransmitting electromagnetic waves on the same power line 1610 or for routing electromagnetic waves between power lines 1610 as shown in **FIGs. 12-13**.

[0160] The transmission device 101 or 102 includes transceiver 210 configured to, for example, up-convert a signal operating at an original frequency range to electromagnetic waves operating at, exhibiting, or associated with a carrier frequency that propagate along a coupler to induce corresponding guided electromagnetic waves that propagate along a surface of the power line 1610. A carrier frequency can be represented by a center frequency having upper and lower cutoff frequencies that define the bandwidth of the electromagnetic waves. The power line 1610 can be a wire (e.g., single stranded or multi-stranded) having a conducting surface or insulated surface. The transceiver 210 can also receive signals from the coupler 220 and down-convert the electromagnetic waves operating at a carrier frequency to signals at their

original frequency.

[0161] Signals received by the communications interface 205 of transmission device 101 or 102 for up-conversion can include without limitation signals supplied by a central office 1611 over a wired or wireless interface of the communications interface 205, a base station 1614 over a wired or wireless interface of the communications interface 205, wireless signals transmitted by mobile devices 1620 to the base station 1614 for delivery over the wired or wireless interface of the communications interface 205, signals supplied by in-building communication devices 1618 over the wired or wireless interface of the communications interface 205, and/or wireless signals supplied to the communications interface 205 by mobile devices 1612 roaming in a wireless communication range of the communications interface 205. In embodiments where the waveguide system 1602 functions as a repeater, such as shown in **FIGs. 12-13**, the communications interface 205 may or may not be included in the waveguide system 1602.

[0162] The electromagnetic waves propagating along the surface of the power line 1610 can be modulated and formatted to include packets or frames of data that include a data payload and further include networking information (such as header information for identifying one or more destination waveguide systems 1602). The networking information may be provided by the waveguide system 1602 or an originating device such as the central office 1611, the base station 1614, mobile devices 1620, or in-building devices 1618, or a combination thereof. Additionally, the modulated electromagnetic waves can include error correction data for mitigating signal disturbances. The networking information and error correction data can be used by a destination waveguide system 1602 for detecting transmissions directed to it, and for down-converting and processing with error correction data transmissions that include voice and/or data signals directed to recipient communication devices communicatively coupled to the destination waveguide system 1602.

[0163] Referring now to the sensors 1604 of the waveguide system 1602, the sensors 1604 can comprise one or more of a temperature sensor 1604a, a disturbance detection sensor 1604b, a loss of energy sensor 1604c, a noise sensor 1604d, a vibration sensor 1604e, an environmental (e.g., weather) sensor 1604f, and/or an image sensor 1604g. The temperature sensor 1604a can be used to measure ambient temperature, a temperature of the transmission device 101 or 102, a temperature of the power line 1610, temperature differentials (e.g., compared to a setpoint or baseline, between transmission device 101 or 102 and 1610, etc.), or any combination thereof. In one embodiment, temperature metrics can be collected and reported periodically to a

network management system 1601 by way of the base station 1614.

[0164] The disturbance detection sensor 1604b can perform measurements on the power line 1610 to detect disturbances such as signal reflections, which may indicate a presence of a downstream disturbance that may impede the propagation of electromagnetic waves on the power line 1610. A signal reflection can represent a distortion resulting from, for example, an electromagnetic wave transmitted on the power line 1610 by the transmission device 101 or 102 that reflects in whole or in part back to the transmission device 101 or 102 from a disturbance in the power line 1610 located downstream from the transmission device 101 or 102.

[0165] Signal reflections can be caused by obstructions on the power line 1610. For example, a tree limb may cause electromagnetic wave reflections when the tree limb is lying on the power line 1610, or is in close proximity to the power line 1610 which may cause a corona discharge. Other obstructions that can cause electromagnetic wave reflections can include without limitation an object that has been entangled on the power line 1610 (e.g., clothing, a shoe wrapped around a power line 1610 with a shoe string, etc.), a corroded build-up on the power line 1610 or an ice build-up. Power grid components may also impede or obstruct with the propagation of electromagnetic waves on the surface of power lines 1610. Illustrations of power grid components that may cause signal reflections include without limitation a transformer and a joint for connecting spliced power lines. A sharp angle on the power line 1610 may also cause electromagnetic wave reflections.

[0166] The disturbance detection sensor 1604b can comprise a circuit to compare magnitudes of electromagnetic wave reflections to magnitudes of original electromagnetic waves transmitted by the transmission device 101 or 102 to determine how much a downstream disturbance in the power line 1610 attenuates transmissions. The disturbance detection sensor 1604b can further comprise a spectral analyzer circuit for performing spectral analysis on the reflected waves. The spectral data generated by the spectral analyzer circuit can be compared with spectral profiles via pattern recognition, an expert system, curve fitting, matched filtering or other artificial intelligence, classification or comparison technique to identify a type of disturbance based on, for example, the spectral profile that most closely matches the spectral data. The spectral profiles can be stored in a memory of the disturbance detection sensor 1604b or may be remotely accessible by the disturbance detection sensor 1604b. The profiles can comprise spectral data that models different disturbances that may be encountered on power lines 1610 to enable the disturbance detection sensor 1604b to identify disturbances locally.

An identification of the disturbance if known can be reported to the network management system 1601 by way of the base station 1614. The disturbance detection sensor 1604b can also utilize the transmission device 101 or 102 to transmit electromagnetic waves as test signals to determine a roundtrip time for an electromagnetic wave reflection. The round trip time measured by the disturbance detection sensor 1604b can be used to calculate a distance traveled by the electromagnetic wave up to a point where the reflection takes place, which enables the disturbance detection sensor 1604b to calculate a distance from the transmission device 101 or 102 to the downstream disturbance on the power line 1610.

[0167] The distance calculated can be reported to the network management system 1601 by way of the base station 1614. In one embodiment, the location of the waveguide system 1602 on the power line 1610 may be known to the network management system 1601, which the network management system 1601 can use to determine a location of the disturbance on the power line 1610 based on a known topology of the power grid. In another embodiment, the waveguide system 1602 can provide its location to the network management system 1601 to assist in the determination of the location of the disturbance on the power line 1610. The location of the waveguide system 1602 can be obtained by the waveguide system 1602 from a pre-programmed location of the waveguide system 1602 stored in a memory of the waveguide system 1602, or the waveguide system 1602 can determine its location using a GPS receiver (not shown) included in the waveguide system 1602.

[0168] The power management system 1605 provides energy to the aforementioned components of the waveguide system 1602. The power management system 1605 can receive energy from solar cells, or from a transformer (not shown) coupled to the power line 1610, or by inductive coupling to the power line 1610 or another nearby power line. The power management system 1605 can also include a backup battery and/or a super capacitor or other capacitor circuit for providing the waveguide system 1602 with temporary power. The loss of energy sensor 1604c can be used to detect when the waveguide system 1602 has a loss of power condition and/or the occurrence of some other malfunction. For example, the loss of energy sensor 1604c can detect when there is a loss of power due to defective solar cells, an obstruction on the solar cells that causes them to malfunction, loss of power on the power line 1610, and/or when the backup power system malfunctions due to expiration of a backup battery, or a detectable defect in a super capacitor. When a malfunction and/or loss of power occurs, the loss of energy sensor 1604c can notify the network management system 1601 by way of the base station 1614.

[0169] The noise sensor 1604d can be used to measure noise on the power line 1610 that may adversely affect transmission of electromagnetic waves on the power line 1610. The noise sensor 1604d can sense unexpected electromagnetic interference, noise bursts, or other sources of disturbances that may interrupt reception of modulated electromagnetic waves on a surface of a power line 1610. A noise burst can be caused by, for example, a corona discharge, or other source of noise. The noise sensor 1604d can compare the measured noise to a noise profile obtained by the waveguide system 1602 from an internal database of noise profiles or from a remotely located database that stores noise profiles via pattern recognition, an expert system, curve fitting, matched filtering or other artificial intelligence, classification or comparison technique. From the comparison, the noise sensor 1604d may identify a noise source (e.g., corona discharge or otherwise) based on, for example, the noise profile that provides the closest match to the measured noise. The noise sensor 1604d can also detect how noise affects transmissions by measuring transmission metrics such as bit error rate, packet loss rate, jitter, packet retransmission requests, etc. The noise sensor 1604d can report to the network management system 1601 by way of the base station 1614 the identity of noise sources, their time of occurrence, and transmission metrics, among other things.

[0170] The vibration sensor 1604e can include accelerometers and/or gyroscopes to detect 2D or 3D vibrations on the power line 1610. The vibrations can be compared to vibration profiles that can be stored locally in the waveguide system 1602, or obtained by the waveguide system 1602 from a remote database via pattern recognition, an expert system, curve fitting, matched filtering or other artificial intelligence, classification or comparison technique. Vibration profiles can be used, for example, to distinguish fallen trees from wind gusts based on, for example, the vibration profile that provides the closest match to the measured vibrations. The results of this analysis can be reported by the vibration sensor 1604e to the network management system 1601 by way of the base station 1614.

[0171] The environmental sensor 1604f can include a barometer for measuring atmospheric pressure, ambient temperature (which can be provided by the temperature sensor 1604a), wind speed, humidity, wind direction, and rainfall, among other things. The environmental sensor 1604f can collect raw information and process this information by comparing it to environmental profiles that can be obtained from a memory of the waveguide system 1602 or a remote database to predict weather conditions before they arise via pattern recognition, an expert system, knowledge-based system or other artificial intelligence, classification or other weather modeling and prediction technique. The environmental sensor

1604f can report raw data as well as its analysis to the network management system 1601.

[0172] The image sensor 1604g can be a digital camera (e.g., a charged coupled device or CCD imager, infrared camera, etc.) for capturing images in a vicinity of the waveguide system 1602. The image sensor 1604g can include an electromechanical mechanism to control movement (e.g., actual position or focal points/zooms) of the camera for inspecting the power line 1610 from multiple perspectives (e.g., top surface, bottom surface, left surface, right surface and so on). Alternatively, the image sensor 1604g can be designed such that no electromechanical mechanism is needed in order to obtain the multiple perspectives. The collection and retrieval of imaging data generated by the image sensor 1604g can be controlled by the network management system 1601, or can be autonomously collected and reported by the image sensor 1604g to the network management system 1601.

[0173] Other sensors that may be suitable for collecting telemetry information associated with the waveguide system 1602 and/or the power lines 1610 for purposes of detecting, predicting and/or mitigating disturbances that can impede the propagation of electromagnetic wave transmissions on power lines 1610 (or any other form of a transmission medium of electromagnetic waves) may be utilized by the waveguide system 1602.

[0174] Referring now to **FIG. 16B**, block diagram 1650 illustrates an example, non-limiting embodiment of a system for managing a power grid 1653 and a communication system 1655 embedded therein or associated therewith in accordance with various aspects described herein. The communication system 1655 comprises a plurality of waveguide systems 1602 coupled to power lines 1610 of the power grid 1653. At least a portion of the waveguide systems 1602 used in the communication system 1655 can be in direct communication with a base station 1614 and/or the network management system 1601. Waveguide systems 1602 not directly connected to a base station 1614 or the network management system 1601 can engage in communication sessions with either a base station 1614 or the network management system 1601 by way of other downstream waveguide systems 1602 connected to a base station 1614 or the network management system 1601.

[0175] The network management system 1601 can be communicatively coupled to equipment of a utility company 1652 and equipment of a communications service provider 1654 for providing each entity, status information associated with the power grid 1653 and the communication system 1655, respectively. The network management system 1601, the equipment of the utility company 1652, and the communications service provider 1654 can access communication devices utilized by utility company personnel 1656 and/or

communication devices utilized by communications service provider personnel 1658 for purposes of providing status information and/or for directing such personnel in the management of the power grid 1653 and/or communication system 1655.

[0176] **FIG. 17A** illustrates a flow diagram of an example, non-limiting embodiment of a method 1700 for detecting and mitigating disturbances occurring in a communication network of the systems of **FIGs. 16A & 16B**. Method 1700 can begin with step 1702 where a waveguide system 1602 transmits and receives messages embedded in, or forming part of, modulated electromagnetic waves or another type of electromagnetic waves traveling along a surface of a power line 1610. The messages can be voice messages, streaming video, and/or other data/information exchanged between communication devices communicatively coupled to the communication system 1655. At step 1704 the sensors 1604 of the waveguide system 1602 can collect sensing data. In an embodiment, the sensing data can be collected in step 1704 prior to, during, or after the transmission and/or receipt of messages in step 1702. At step 1706 the waveguide system 1602 (or the sensors 1604 themselves) can determine from the sensing data an actual or predicted occurrence of a disturbance in the communication system 1655 that can affect communications originating from (e.g., transmitted by) or received by the waveguide system 1602. The waveguide system 1602 (or the sensors 1604) can process temperature data, signal reflection data, loss of energy data, noise data, vibration data, environmental data, or any combination thereof to make this determination. The waveguide system 1602 (or the sensors 1604) may also detect, identify, estimate, or predict the source of the disturbance and/or its location in the communication system 1655. If a disturbance is neither detected/identified nor predicted/estimated at step 1708, the waveguide system 1602 can proceed to step 1702 where it continues to transmit and receive messages embedded in, or forming part of, modulated electromagnetic waves traveling along a surface of the power line 1610.

[0177] If at step 1708 a disturbance is detected/identified or predicted/estimated to occur, the waveguide system 1602 proceeds to step 1710 to determine if the disturbance adversely affects (or alternatively, is likely to adversely affect or the extent to which it may adversely affect) transmission or reception of messages in the communication system 1655. In one embodiment, a duration threshold and a frequency of occurrence threshold can be used at step 1710 to determine when a disturbance adversely affects communications in the communication system 1655. For illustration purposes only, assume a duration threshold is set to 500 ms, while a frequency of occurrence threshold is set to 5 disturbances occurring in an observation period of 10 sec. Thus, a disturbance having a duration greater than 500ms will trigger the duration

threshold. Additionally, any disturbance occurring more than 5 times in a 10 sec time interval will trigger the frequency of occurrence threshold.

[0178] In one embodiment, a disturbance may be considered to adversely affect signal integrity in the communication systems 1655 when the duration threshold alone is exceeded. In another embodiment, a disturbance may be considered as adversely affecting signal integrity in the communication systems 1655 when both the duration threshold and the frequency of occurrence threshold are exceeded. The latter embodiment is thus more conservative than the former embodiment for classifying disturbances that adversely affect signal integrity in the communication system 1655. It will be appreciated that many other algorithms and associated parameters and thresholds can be utilized for step 1710 in accordance with example embodiments.

[0179] Referring back to method 1700, if at step 1710 the disturbance detected at step 1708 does not meet the condition for adversely affected communications (e.g., neither exceeds the duration threshold nor the frequency of occurrence threshold), the waveguide system 1602 may proceed to step 1702 and continue processing messages. For instance, if the disturbance detected in step 1708 has a duration of 1 msec with a single occurrence in a 10 sec time period, then neither threshold will be exceeded. Consequently, such a disturbance may be considered as having a nominal effect on signal integrity in the communication system 1655 and thus would not be flagged as a disturbance requiring mitigation. Although not flagged, the occurrence of the disturbance, its time of occurrence, its frequency of occurrence, spectral data, and/or other useful information, may be reported to the network management system 1601 as telemetry data for monitoring purposes.

[0180] Referring back to step 1710, if on the other hand the disturbance satisfies the condition for adversely affected communications (e.g., exceeds either or both thresholds), the waveguide system 1602 can proceed to step 1712 and report the incident to the network management system 1601. The report can include raw sensing data collected by the sensors 1604, a description of the disturbance if known by the waveguide system 1602, a time of occurrence of the disturbance, a frequency of occurrence of the disturbance, a location associated with the disturbance, parameters readings such as bit error rate, packet loss rate, retransmission requests, jitter, latency and so on. If the disturbance is based on a prediction by one or more sensors of the waveguide system 1602, the report can include a type of disturbance expected, and if predictable, an expected time occurrence of the disturbance, and an expected frequency of occurrence of the predicted disturbance when the prediction is based on historical

sensing data collected by the sensors 1604 of the waveguide system 1602.

[0181] At step 1714, the network management system 1601 can determine a mitigation, circumvention, or correction technique, which may include directing the waveguide system 1602 to reroute traffic to circumvent the disturbance if the location of the disturbance can be determined. In one embodiment, the waveguide coupling device 1402 detecting the disturbance may direct a repeater such as the one shown in **FIGs. 13-14** to connect the waveguide system 1602 from a primary power line affected by the disturbance to a secondary power line to enable the waveguide system 1602 to reroute traffic to a different transmission medium and avoid the disturbance. In an embodiment where the waveguide system 1602 is configured as a repeater the waveguide system 1602 can itself perform the rerouting of traffic from the primary power line to the secondary power line. It is further noted that for bidirectional communications (e.g., full or half-duplex communications), the repeater can be configured to reroute traffic from the secondary power line back to the primary power line for processing by the waveguide system 1602.

[0182] In another embodiment, the waveguide system 1602 can redirect traffic by instructing a first repeater situated upstream of the disturbance and a second repeater situated downstream of the disturbance to redirect traffic from a primary power line temporarily to a secondary power line and back to the primary power line in a manner that avoids the disturbance. It is further noted that for bidirectional communications (e.g., full or half-duplex communications), repeaters can be configured to reroute traffic from the secondary power line back to the primary power line.

[0183] To avoid interrupting existing communication sessions occurring on a secondary power line, the network management system 1601 may direct the waveguide system 1602 to instruct repeater(s) to utilize unused time slot(s) and/or frequency band(s) of the secondary power line for redirecting data and/or voice traffic away from the primary power line to circumvent the disturbance.

[0184] At step 1716, while traffic is being rerouted to avoid the disturbance, the network management system 1601 can notify equipment of the utility company 1652 and/or equipment of the communications service provider 1654, which in turn may notify personnel of the utility company 1656 and/or personnel of the communications service provider 1658 of the detected disturbance and its location if known. Field personnel from either party can attend to resolving the disturbance at a determined location of the disturbance. Once the disturbance is removed or otherwise mitigated by personnel of the utility company and/or personnel of the

communications service provider, such personnel can notify their respective companies and/or the network management system 1601 utilizing field equipment (e.g., a laptop computer, smartphone, etc.) communicatively coupled to network management system 1601, and/or equipment of the utility company and/or the communications service provider. The notification can include a description of how the disturbance was mitigated and any changes to the power lines 1610 that may change a topology of the communication system 1655.

[0185] Once the disturbance has been resolved (as determined in decision 1718), the network management system 1601 can direct the waveguide system 1602 at step 1720 to restore the previous routing configuration used by the waveguide system 1602 or route traffic according to a new routing configuration if the restoration strategy used to mitigate the disturbance resulted in a new network topology of the communication system 1655. In another embodiment, the waveguide system 1602 can be configured to monitor mitigation of the disturbance by transmitting test signals on the power line 1610 to determine when the disturbance has been removed. Once the waveguide system 1602 detects an absence of the disturbance it can autonomously restore its routing configuration without assistance by the network management system 1601 if it determines the network topology of the communication system 1655 has not changed, or it can utilize a new routing configuration that adapts to a detected new network topology.

[0186] **FIG. 17B** illustrates a flow diagram of an example, non-limiting embodiment of a method 1750 for detecting and mitigating disturbances occurring in a communication network of the system of **FIGs. 16A** and **16B**. In one embodiment, method 1750 can begin with step 1752 where a network management system 1601 receives from equipment of the utility company 1652 or equipment of the communications service provider 1654 maintenance information associated with a maintenance schedule. The network management system 1601 can at step 1754 identify from the maintenance information, maintenance activities to be performed during the maintenance schedule. From these activities, the network management system 1601 can detect a disturbance resulting from the maintenance (e.g., scheduled replacement of a power line 1610, scheduled replacement of a waveguide system 1602 on the power line 1610, scheduled reconfiguration of power lines 1610 in the power grid 1653, etc.).

[0187] In another embodiment, the network management system 1601 can receive at step 1755 telemetry information from one or more waveguide systems 1602. The telemetry information can include among other things an identity of each waveguide system 1602 submitting the telemetry information, measurements taken by sensors 1604 of each waveguide

system 1602, information relating to predicted, estimated, or actual disturbances detected by the sensors 1604 of each waveguide system 1602, location information associated with each waveguide system 1602, an estimated location of a detected disturbance, an identification of the disturbance, and so on. The network management system 1601 can determine from the telemetry information a type of disturbance that may be adverse to operations of the waveguide, transmission of the electromagnetic waves along the wire surface, or both. The network management system 1601 can also use telemetry information from multiple waveguide systems 1602 to isolate and identify the disturbance. Additionally, the network management system 1601 can request telemetry information from waveguide systems 1602 in a vicinity of an affected waveguide system 1602 to triangulate a location of the disturbance and/or validate an identification of the disturbance by receiving similar telemetry information from other waveguide systems 1602.

[0188] In yet another embodiment, the network management system 1601 can receive at step 1756 an unscheduled activity report from maintenance field personnel. Unscheduled maintenance may occur as result of field calls that are unplanned or as a result of unexpected field issues discovered during field calls or scheduled maintenance activities. The activity report can identify changes to a topology configuration of the power grid 1653 resulting from field personnel addressing discovered issues in the communication system 1655 and/or power grid 1653, changes to one or more waveguide systems 1602 (such as replacement or repair thereof), mitigation of disturbances performed if any, and so on.

[0189] At step 1758, the network management system 1601 can determine from reports received according to steps 1752 through 1756 if a disturbance will occur based on a maintenance schedule, or if a disturbance has occurred or is predicted to occur based on telemetry data, or if a disturbance has occurred due to an unplanned maintenance identified in a field activity report. From any of these reports, the network management system 1601 can determine whether a detected or predicted disturbance requires rerouting of traffic by the affected waveguide systems 1602 or other waveguide systems 1602 of the communication system 1655.

[0190] When a disturbance is detected or predicted at step 1758, the network management system 1601 can proceed to step 1760 where it can direct one or more waveguide systems 1602 to reroute traffic to circumvent the disturbance. When the disturbance is permanent due to a permanent topology change of the power grid 1653, the network management system 1601 can proceed to step 1770 and skip steps 1762, 1764, 1766, and 1772. At step 1770, the network

management system 1601 can direct one or more waveguide systems 1602 to use a new routing configuration that adapts to the new topology. However, when the disturbance has been detected from telemetry information supplied by one or more waveguide systems 1602, the network management system 1601 can notify maintenance personnel of the utility company 1656 or the communications service provider 1658 of a location of the disturbance, a type of disturbance if known, and related information that may be helpful to such personnel to mitigate the disturbance. When a disturbance is expected due to maintenance activities, the network management system 1601 can direct one or more waveguide systems 1602 to reconfigure traffic routes at a given schedule (consistent with the maintenance schedule) to avoid disturbances caused by the maintenance activities during the maintenance schedule.

[0191] Returning back to step 1760 and upon its completion, the process can continue with step 1762. At step 1762, the network management system 1601 can monitor when the disturbance(s) have been mitigated by field personnel. Mitigation of a disturbance can be detected at step 1762 by analyzing field reports submitted to the network management system 1601 by field personnel over a communications network (e.g., cellular communication system) utilizing field equipment (e.g., a laptop computer or handheld computer/device). If field personnel have reported that a disturbance has been mitigated, the network management system 1601 can proceed to step 1764 to determine from the field report whether a topology change was required to mitigate the disturbance. A topology change can include rerouting a power line 1610, reconfiguring a waveguide system 1602 to utilize a different power line 1610, otherwise utilizing an alternative link to bypass the disturbance and so on. If a topology change has taken place, the network management system 1601 can direct at step 1770 one or more waveguide systems 1602 to use a new routing configuration that adapts to the new topology.

[0192] If, however, a topology change has not been reported by field personnel, the network management system 1601 can proceed to step 1766 where it can direct one or more waveguide systems 1602 to send test signals to test a routing configuration that had been used prior to the detected disturbance(s). Test signals can be sent to affected waveguide systems 1602 in a vicinity of the disturbance. The test signals can be used to determine if signal disturbances (e.g., electromagnetic wave reflections) are detected by any of the waveguide systems 1602. If the test signals confirm that a prior routing configuration is no longer subject to previously detected disturbance(s), then the network management system 1601 can at step 1772 direct the affected waveguide systems 1602 to restore a previous routing configuration. If, however, test signals analyzed by one or more waveguide coupling device 1402 and reported

to the network management system 1601 indicate that the disturbance(s) or new disturbance(s) are present, then the network management system 1601 will proceed to step 1768 and report this information to field personnel to further address field issues. The network management system 1601 can in this situation continue to monitor mitigation of the disturbance(s) at step 1762.

[0193] In the aforementioned embodiments, the waveguide systems 1602 can be configured to be self-adapting to changes in the power grid 1653 and/or to mitigation of disturbances. That is, one or more affected waveguide systems 1602 can be configured to self-monitor mitigation of disturbances and reconfigure traffic routes without requiring instructions to be sent to them by the network management system 1601. In this embodiment, the one or more waveguide systems 1602 that are self-configurable can inform the network management system 1601 of its routing choices so that the network management system 1601 can maintain a macro-level view of the communication topology of the communication system 1655.

[0194] While for purposes of simplicity of explanation, the respective processes are shown and described as a series of blocks in **FIGs. 17A** and **17B**, respectively, it is to be understood and appreciated that the claimed subject matter is not limited by the order of the blocks, as some blocks may occur in different orders and/or concurrently with other blocks from what is depicted and described herein. Moreover, not all illustrated blocks may be required to implement the methods described herein.

[0195] Turning now to **FIG. 18A,** a block diagram illustrating an example, non-limiting embodiment of a communication system 1800 in accordance with various aspects of the subject disclosure is shown. The communication system 1800 can include a macro base station 1802 such as a base station or access point having antennas that covers one or more sectors (e.g., 6 or more sectors). The macro base station 1802 can be communicatively coupled to a communication node 1804A that serves as a master or distribution node for other communication nodes 1804B-E distributed at differing geographic locations inside or beyond a coverage area of the macro base station 1802. The communication nodes 1804 operate as a distributed antenna system configured to handle communications traffic associated with client devices such as mobile devices (e.g., cell phones) and/or fixed/stationary devices (e.g., a communication device in a residence, or commercial establishment) that are wirelessly coupled to any of the communication nodes 1804. In particular, the wireless resources of the macro base station 1802 can be made available to mobile devices by allowing and/or redirecting certain mobile and/or stationary devices to utilize the wireless resources of a communication

node 1804 in a communication range of the mobile or stationary devices.

[0196] The communication nodes 1804A-E can be communicatively coupled to each other over an interface 1810. In one embodiment, the interface 1810 can comprise a wired or tethered interface (e.g., fiber optic cable). In other embodiments, the interface 1810 can comprise a wireless RF interface forming a radio distributed antenna system. In various embodiments, the communication nodes 1804A-E can be configured to provide communication services to mobile and stationary devices according to instructions provided by the macro base station 1802. In other examples of operation however, the communication nodes 1804A-E operate merely as analog repeaters to spread the coverage of the macro base station 1802 throughout the entire range of the individual communication nodes 1804A-E.

[0197] The micro base stations (depicted as communication nodes 1804) can differ from the macro base station in several ways. For example, the communication range of the micro base stations can be smaller than the communication range of the macro base station. Consequently, the power consumed by the micro base stations can be less than the power consumed by the macro base station. The macro base station optionally directs the micro base stations as to which mobile and/or stationary devices they are to communicate with, and which carrier frequency, spectral segment(s) and/or timeslot schedule of such spectral segment(s) are to be used by the micro base stations when communicating with certain mobile or stationary devices. In these cases, control of the micro base stations by the macro base station can be performed in a master-slave configuration or other suitable control configurations. Whether operating independently or under the control of the macro base station 1802, the resources of the micro base stations can be simpler and less costly than the resources utilized by the macro base station 1802.

[0198] Turning now to **FIG. 18B**, a block diagram illustrating an example, non-limiting embodiment of the communication nodes 1804B-E of the communication system 1800 of FIG. 18A is shown. In this illustration, the communication nodes 1804B-E are placed on a utility fixture such as a light post. In other embodiments, some of the communication nodes 1804B-E can be placed on a building or a utility post or pole that is used for distributing power and/or communication lines. The communication nodes 1804B-E in these illustrations can be configured to communicate with each other over the interface 1810, which in this illustration is shown as a wireless interface. The communication nodes 1804B-E can also be configured to communicate with mobile or stationary devices 1806A-C over a wireless interface 1811 that conforms to one or more communication protocols (e.g., fourth generation (4G) wireless

signals such as LTE signals or other 4G signals, fifth generation (5G) wireless signals, WiMAX, 802.11 signals, ultra-wideband signals, etc.). The communication nodes 1804 can be configured to exchange signals over the interface 1810 at an operating frequency that may be higher (e.g., 28 GHz, 38 GHz, 60 GHz, 80GHz or higher) than the operating frequency used for communicating with the mobile or stationary devices (e.g., 1.9GHz) over interface 1811. The high carrier frequency and a wider bandwidth can be used for communicating between the communication nodes 1804 enabling the communication nodes 1804 to provide communication services to multiple mobile or stationary devices via one or more differing frequency bands, (e.g. a 900 MHz band, 1.9 GHz band, a 2.4 GHz band, and/or a 5.8 GHz band, etc.) and/or one or more differing protocols, as will be illustrated by spectral downlink and uplink diagrams of **FIG. 19A** described below. In other embodiments, particularly where the interface 1810 is implemented via a guided wave communications system on a wire, a wideband spectrum in a lower frequency range (e.g. in the range of 2-6 GHz, 4-10 GHz, etc.) can be employed.

[0199] Turning now to **FIGs. 18C-18D**, block diagrams illustrating example, non-limiting embodiments of a communication node 1804 of the communication system 1800 of FIG. 18A is shown. The communication node 1804 can be attached to a support structure 1818 of a utility fixture such as a utility post or pole as shown in **FIG. 18C**. The communication node 1804 can be affixed to the support structure 1818 with an arm 1820 constructed of plastic or other suitable material that attaches to an end of the communication node 1804. The communication node 1804 can further include a plastic housing assembly 1816 that covers components of the communication node 1804. The communication node 1804 can be powered by a power line 1821 (e.g., 110/220 VAC). The power line 1821 can originate from a light pole or can be coupled to a power line of a utility pole.

[0200] In an embodiment where the communication nodes 1804 communicate wirelessly with other communication nodes 1804 as shown in FIG. 18B, a top side 1812 of the communication node 1804 (illustrated also in **FIG. 18D**) can comprise a plurality of antennas 1822 (e.g., 16 dielectric antennas devoid of metal surfaces) coupled to one or more transceivers such as, for example, in whole or in part, the transceiver 1400 illustrated in FIG. 14. Each of the plurality of antennas 1822 of the top side 1812 can operate as a sector of the communication node 1804, each sector configured for communicating with at least one communication node 1804 in a communication range of the sector. Alternatively, or in combination, the interface 1810 between communication nodes 1804 can be a tethered interface (e.g., a fiber optic cable,

or a power line used for transport of guided electromagnetic waves as previously described). In other embodiments, the interface 1810 can differ between communication nodes 1804. That is, some communications nodes 1804 may communicate over a wireless interface, while others communicate over a tethered interface. In yet other embodiments, some communications nodes 1804 may utilize a combined wireless and tethered interface.

[0201] A bottom side 1814 of the communication node 1804 can also comprise a plurality of antennas 1824 for wirelessly communicating with one or more mobile or stationary devices 1806 at a carrier frequency that is suitable for the mobile or stationary devices 1806. As noted earlier, the carrier frequency used by the communication node 1804 for communicating with the mobile or station devices over the wireless interface 1811 shown in FIG. 18B can be different from the carrier frequency used for communicating between the communication nodes 1804 over interface 1810. The plurality of antennas 1824 of the bottom portion 1814 of the communication node 1804 can also utilize a transceiver such as, for example, in whole or in part, the transceiver 1400 illustrated in FIG. 14.

[0202] Turning now to **FIG. 19A**, a block diagram illustrating an example, non-limiting embodiment of downlink and uplink communication techniques for enabling a base station to communicate with the communication nodes 1804 of FIG. 18A is shown. In the illustrations of FIG. 19A, downlink signals (i.e., signals directed from the macro base station 1802 to the communication nodes 1804) can be spectrally divided into control channels 1902, downlink spectral segments 1906 each including modulated signals which can be frequency converted to their original/native frequency band for enabling the communication nodes 1804 to communicate with one or more mobile or stationary devices 1906, and pilot signals 1904 which can be supplied with some or all of the spectral segments 1906 for mitigating distortion created between the communication nodes 1904. The pilot signals 1904 can be processed by the top side 1816 (tethered or wireless) transceivers of downstream communication nodes 1804 to remove distortion from a receive signal (e.g., phase distortion). Each downlink spectral segment 1906 can be allotted a bandwidth 1905 sufficiently wide (e.g., 50MHz) to include a corresponding pilot signal 1904 and one or more downlink modulated signals located in frequency channels (or frequency slots) in the spectral segment 1906. The modulated signals can represent cellular channels, WLAN channels or other modulated communication signals (e.g., 10–20 MHz), which can be used by the communication nodes 1804 for communicating with one or more mobile or stationary devices 1806.

[0203] Uplink modulated signals generated by mobile or stationary communication

devices in their native/original frequency bands can be frequency converted and thereby located in frequency channels (or frequency slots) in the uplink spectral segment 1910. The uplink modulated signals can represent cellular channels, WLAN channels or other modulated communication signals. Each uplink spectral segment 1910 can be allotted a similar or same bandwidth 1905 to include a pilot signal 1908 which can be provided with some or each spectral segment 1910 to enable upstream communication nodes 1804 and/or the macro base station 1802 to remove distortion (e.g., phase error).

[0204] In the embodiment shown, the downlink and uplink spectral segments 1906 and 1910 each comprise a plurality of frequency channels (or frequency slots),which can be occupied with modulated signals that have been frequency converted from any number of native/original frequency bands (e.g. a 900 MHz band, 1.9 GHz band, a 2.4 GHz band, and/or a 5.8 GHz band, etc.). The modulated signals can be up-converted to adjacent frequency channels in downlink and uplink spectral segments 1906 and 1910. In this fashion, while some adjacent frequency channels in a downlink spectral segment 1906 can include modulated signals originally in a same native/original frequency band, other adjacent frequency channels in the downlink spectral segment 1906 can also include modulated signals originally in different native/original frequency bands, but frequency converted to be located in adjacent frequency channels of the downlink spectral segment 1906. For example, a first modulated signal in a 1.9GHz band and a second modulated signal in the same frequency band (i.e., 1.9GHz) can be frequency converted and thereby positioned in adjacent frequency channels of a downlink spectral segment 1906. In another illustration, a first modulated signal in a 1.9GHz band and a second communication signal in a different frequency band (i.e., 2.4GHz) can be frequency converted and thereby positioned in adjacent frequency channels of a downlink spectral segment 1906. Accordingly, frequency channels of a downlink spectral segment 1906 can be occupied with any combination of modulated signals of the same or differing signaling protocols and of a same or differing native/original frequency bands.

[0205] Similarly, while some adjacent frequency channels in an uplink spectral segment 1910 can include modulated signals originally in a same frequency band, adjacent frequency channels in the uplink spectral segment 1910 can also include modulated signals originally in different native/original frequency bands, but frequency converted to be located in adjacent frequency channels of an uplink segment 1910. For example, a first communication signal in a 2.4GHz band and a second communication signal in the same frequency band (i.e., 2.4GHz) can be frequency converted and thereby positioned in adjacent frequency channels of an uplink

spectral segment 1910. In another illustration, a first communication signal in a 1.9GHz band and a second communication signal in a different frequency band (i.e., 2.4GHz) can be frequency converted and thereby positioned in adjacent frequency channels of the uplink spectral segment 1906. Accordingly, frequency channels of an uplink spectral segment 1910 can be occupied with any combination of modulated signals of a same or differing signaling protocols and of a same or differing native/original frequency bands. It should be noted that a downlink spectral segment 1906 and an uplink spectral segment 1910 can themselves be adjacent to one another and separated by only a guard band or otherwise separated by a larger frequency spacing, depending on the spectral allocation in place.

[0206] Turning now to **FIG. 19B,** a block diagram 1920 illustrating an example, non-limiting embodiment of a communication node is shown. In particular, the communication node device such as communication node 1804A of a radio distributed antenna system includes a base station interface 1922, duplexer/diplexer assembly 1924, and two transceivers 1930 and 1932. It should be noted however, that when the communication node 1804A is collocated with a base station, such as a macro base station 1802, the duplexer/diplexer assembly 1924 and the transceiver 1930 can be omitted and the transceiver 1932 can be directly coupled to the base station interface 1922.

[0207] In various embodiments, the base station interface 1922 receives a first modulated signal having one or more down link channels in a first spectral segment for transmission to a client device such as one or more mobile communication devices. The first spectral segment represents an original/native frequency band of the first modulated signal. The first modulated signal can include one or more downlink communication channels conforming to a signaling protocol such as a LTE or other 4G wireless protocol, a 5G wireless communication protocol, an ultra-wideband protocol, a WiMAX protocol, a 802.11 or other wireless local area network protocol and/or other communication protocol. The duplexer/diplexer assembly 1924 transfers the first modulated signal in the first spectral segment to the transceiver 1930 for direct communication with one or more mobile communication devices in range of the communication node 1804A as a free space wireless signal. In various embodiments, the transceiver 1930 is implemented via analog circuitry that merely provides: filtration to pass the spectrum of the downlink channels and the uplink channels of modulated signals in their original/native frequency bands while attenuating out-of-band signals, power amplification, transmit/receive switching, duplexing, diplexing, and impedance matching to drive one or more antennas that sends and receives the wireless signals of interface 1810.

[0208] In other embodiments, the transceiver 1932 is configured to perform frequency conversion of the first modulated signal in the first spectral segment to the first modulated signal at a first carrier frequency based on, in various embodiments, an analog signal processing of the first modulated signal without modifying the signaling protocol of the first modulated signal. The first modulated signal at the first carrier frequency can occupy one or more frequency channels of a downlink spectral segment 1906. The first carrier frequency can be in a millimeter-wave or microwave frequency band. As used herein analog signal processing includes filtering, switching, duplexing, diplexing, amplification, frequency up and down conversion, and other analog processing that does not require digital signal processing, such as including without limitation either analog to digital conversion, digital to analog conversion, or digital frequency conversion. In other embodiments, the transceiver 1932 can be configured to perform frequency conversion of the first modulated signal in the first spectral segment to the first carrier frequency by applying digital signal processing to the first modulated signal without utilizing any form of analog signal processing and without modifying the signaling protocol of the first modulated signal. In yet other embodiments, the transceiver 1932 can be configured to perform frequency conversion of the first modulated signal in the first spectral segment to the first carrier frequency by applying a combination of digital signal processing and analog processing to the first modulated signal and without modifying the signaling protocol of the first modulated signal.

[0209] The transceiver 1932 can be further configured to transmit one or more control channels, one or more corresponding reference signals, such as pilot signals or other reference signals, and/or one or more clock signals together with the first modulated signal at the first carrier frequency to a network element of the distributed antenna system, such as one or more downstream communication nodes 1904B-E, for wireless distribution of the first modulated signal to one or more other mobile communication devices once frequency converted by the network element to the first spectral segment. In particular, the reference signal enables the network element to reduce a phase error (and/or other forms of signal distortion) during processing of the first modulated signal from the first carrier frequency to the first spectral segment. The control channel can include instructions to direct the communication node of the distributed antenna system to convert the first modulated signal at the first carrier frequency to the first modulated signal in the first spectral segment, to control frequency selections and reuse patterns, handoff and/or other control signaling. In embodiments where the instructions transmitted and received via the control channel are digital signals, the transceiver can 1932

can include a digital signal processing component that provides analog to digital conversion, digital to analog conversion and that processes the digital data sent and/or received via the control channel. The clock signals supplied with the downlink spectral segment 1906 can be utilized to synchronize timing of digital control channel processing by the downstream communication nodes 1904B-E to recover the instructions from the control channel and/or to provide other timing signals.

[0210] In various embodiments, the transceiver 1932 can receive a second modulated signal at a second carrier frequency from a network element such as a communication node 1804B-E. The second modulated signal can include one or more uplink frequency channels occupied by one or more modulated signals conforming to a signaling protocol such as a LTE or other 4G wireless protocol, a 5G wireless communication protocol, an ultra-wideband protocol, a 802.11 or other wireless local area network protocol and/or other communication protocol. In particular, the mobile or stationary communication device generates the second modulated signal in a second spectral segment such as an original/native frequency band and the network element frequency converts the second modulated signal in the second spectral segment to the second modulated signal at the second carrier frequency and transmits the second modulated signal at the second carrier frequency as received by the communication node 1804A. The transceiver 1932 operates to convert the second modulated signal at the second carrier frequency to the second modulated signal in the second spectral segment and sends the second modulated signal in the second spectral segment, via the duplexer/diplexer assembly 1924 and base station interface 1922, to a base station, such as macro base station 1802, for processing.

[0211] Consider the following examples where the communication node 1804A is implemented in a distributed antenna system. The uplink frequency channels in an uplink spectral segment 1910 and downlink frequency channels in a downlink spectral segment 1906 can be occupied with signals modulated and otherwise formatted in accordance with a DOCSIS 2.0 or higher standard protocol, a WiMAX standard protocol, an ultra-wideband protocol, a 802.11 standard protocol, a 4G or 5G voice and data protocol such as an LTE protocol and/or other standard communication protocol. In addition to protocols that conform with current standards, any of these protocols can be modified to operate in conjunction with the system of FIG. 18A. For example, a 802.11 protocol or other protocol can be modified to include additional guidelines and/or a separate data channel to provide collision detection/multiple access over a wider area (e.g. allowing network elements or communication devices

communicatively coupled to the network elements that are communicating via a particular frequency channel of a downlink spectral segment 1906 or uplink spectral segment 1910 to hear one another). In various embodiments all of the uplink frequency channels of the uplink spectral segment 1910 and downlink frequency channel of the downlink spectral segment 1906 can all be formatted in accordance with the same communications protocol. In the alternative however, two or more differing protocols can be employed on both the uplink spectral segment 1910 and the downlink spectral segment 1906 to, for example, be compatible with a wider range of client devices and/or operate in different frequency bands.

[0212] When two or more differing protocols are employed, a first subset of the downlink frequency channels of the downlink spectral segment 1906 can be modulated in accordance with a first standard protocol and a second subset of the downlink frequency channels of the downlink spectral segment 1906 can be modulated in accordance with a second standard protocol that differs from the first standard protocol. Likewise a first subset of the uplink frequency channels of the uplink spectral segment 1910 can be received by the system for demodulation in accordance with the first standard protocol and a second subset of the uplink frequency channels of the uplink spectral segment 1910 can be received in accordance with a second standard protocol for demodulation in accordance with the second standard protocol that differs from the first standard protocol.

[0213] In accordance with these examples, the base station interface 1922 can be configured to receive modulated signals such as one or more downlink channels in their original/native frequency bands from a base station such as macro base station 1802 or other communications network element. Similarly, the base station interface 1922 can be configured to supply to a base station modulated signals received from another network element that is frequency converted to modulated signals having one or more uplink channels in their original/native frequency bands. The base station interface 1922 can be implemented via a wired or wireless interface that bidirectionally communicates communication signals such as uplink and downlink channels in their original/native frequency bands, communication control signals and other network signaling with a macro base station or other network element. The duplexer/diplexer assembly 1924 is configured to transfer the downlink channels in their original/native frequency bands to the transceiver 1932 which frequency converts the frequency of the downlink channels from their original/native frequency bands into the frequency spectrum of interface 1810 – in this case a wireless communication link used to transport the communication signals downstream to one or more other communication nodes

1804B-E of the distributed antenna system in range of the communication device 1804A.

[0214] In various embodiments, the transceiver 1932 includes an analog radio that frequency converts the downlink channel signals in their original/native frequency bands via mixing or other heterodyne action to generate frequency converted downlink channels signals that occupy downlink frequency channels of the downlink spectral segment 1906. In this illustration, the downlink spectral segment 1906 is within the downlink frequency band of the interface 1810. In an embodiment, the downlink channel signals are up-converted from their original/native frequency bands to a 28 GHz, 38 GHz, 60 GHz, 70 GHz or 80 GHz band of the downlink spectral segment 1906 for line-of-sight wireless communications to one or more other communication nodes 1804B-E. It is noted, however, that other frequency bands can likewise be employed for a downlink spectral segment 1906 (e.g., 3GHz to 5 GHz). For example, the transceiver 1932 can be configured for down-conversion of one or more downlink channel signals in their original/native spectral bands in instances where the frequency band of the interface 1810 falls below the original/native spectral bands of the one or more downlink channels signals.

[0215] The transceiver 1932 can be coupled to multiple individual antennas, such as antennas 1822 presented in conjunction with **FIG. 18D**, for communicating with the communication nodes 1804B, a phased antenna array or steerable beam or multi-beam antenna system for communicating with multiple devices at different locations. The duplexer/diplexer assembly 1924 can include a duplexer, triplexer, splitter, switch, router and/or other assembly that operates as a "channel duplexer" to provide bi-directional communications over multiple communication paths via one or more original/native spectral segments of the uplink and downlink channels.

[0216] In addition to forwarding frequency converted modulated signals downstream to other communication nodes 1804B-E at a carrier frequency that differs from their original/native spectral bands, the communication node 1804A can also communicate all or a selected portion of the modulated signals unmodified from their original/native spectral bands to client devices in a wireless communication range of the communication node 1804A via the wireless interface 1811. The duplexer/diplexer assembly 1924 transfers the modulated signals in their original/native spectral bands to the transceiver 1930. The transceiver 1930 can include a channel selection filter for selecting one or more downlink channels and a power amplifier coupled to one or more antennas, such as antennas 1824 presented in conjunction with **FIG. 18D**, for transmission of the downlink channels via wireless interface 1811 to mobile or fixed

wireless devices.

[0217] In addition to downlink communications destined for client devices, communication node 1804A can operate in a reciprocal fashion to handle uplink communications originating from client devices as well. In operation, the transceiver 1932 receives uplink channels in the uplink spectral segment 1910 from communication nodes 1804B-E via the uplink spectrum of interface 1810. The uplink frequency channels in the uplink spectral segment 1910 include modulated signals that were frequency converted by communication nodes 1804B-E from their original/native spectral bands to the uplink frequency channels of the uplink spectral segment 1910. In situations where the interface 1810 operates in a higher frequency band than the native/original spectral segments of the modulated signals supplied by the client devices, the transceiver 1932 down-converts the up-converted modulated signals to their original frequency bands. In situations, however, where the interface 1810 operates in a lower frequency band than the native/original spectral segments of the modulated signals supplied by the client devices, the transceiver 1932 up-converts the down-converted modulated signals to their original frequency bands. Further, the transceiver 1930 operates to receive all or selected ones of the modulated signals in their original/native frequency bands from client devices via the wireless interface 1811. The duplexer/diplexer assembly 1924 transfers the modulated signals in their original/native frequency bands received via the transceiver 1930 to the base station interface 1922 to be sent to the macro base station 1802 or other network element of a communications network. Similarly, modulated signals occupying uplink frequency channels in an uplink spectral segment 1910 that are frequency converted to their original/native frequency bands by the transceiver 1932 are supplied to the duplexer/diplexer assembly 1924 for transfer to the base station interface 1922 to be sent to the macro base station 1802 or other network element of a communications network.

[0218] Turning now to **FIG. 19C,** a block diagram 1935 illustrating an example, non-limiting embodiment of a communication node is shown. In particular, the communication node device such as communication node 1804B, 1804C, 1804D or 1804E of a radio distributed antenna system includes transceiver 1933, duplexer/diplexer assembly 1924, an amplifier 1938 and two transceivers 1936A and 1936B.

[0219] In various embodiments, the transceiver 1936A receives, from a communication node 1804A or an upstream communication node 1804B-E, a first modulated signal at a first carrier frequency corresponding to the placement of the channels of the first modulated signal in the converted spectrum of the distributed antenna system (e.g., frequency channels of one or

more downlink spectral segments 1906). The first modulated signal includes first communications data provided by a base station and directed to a mobile communication device. The transceiver 1936A is further configured to receive, from a communication node 1804A one or more control channels and one or more corresponding reference signals, such as pilot signals or other reference signals, and/or one or more clock signals associated with the first modulated signal at the first carrier frequency. The first modulated signal can include one or more downlink communication channels conforming to a signaling protocol such as a LTE or other 4G wireless protocol, a 5G wireless communication protocol, an ultra-wideband protocol, a WiMAX protocol, a 802.11 or other wireless local area network protocol and/or other communication protocol.

[0220] As previously discussed, the reference signal enables the network element to reduce a phase error (and/or other forms of signal distortion) during processing of the first modulated signal from the first carrier frequency to the first spectral segment (i.e., original/native spectrum). The control channel includes instructions to direct the communication node of the distributed antenna system to convert the first modulated signal at the first carrier frequency to the first modulated signal in the first spectral segment, to control frequency selections and reuse patterns, handoff and/or other control signaling. The clock signals can synchronize timing of digital control channel processing by the downstream communication nodes 1804B-E to recover the instructions from the control channel and/or to provide other timing signals.

[0221] The amplifier 1938 can be a bidirectional amplifier that amplifies the first modulated signal at the first carrier frequency together with the reference signals, control channels and/or clock signals for coupling via the duplexer/diplexer assembly 1924 to transceiver 1936B, which in this illustration, serves as a repeater for retransmission of the amplified the first modulated signal at the first carrier frequency together with the reference signals, control channels and/or clock signals to one or more others of the communication nodes 1804B-E that are downstream from the communication node 1804B-E that is shown and that operate in a similar fashion.

[0222] The amplified first modulated signal at the first carrier frequency together with the reference signals, control channels and/or clock signals are also coupled via the duplexer/diplexer assembly 1924 to the transceiver 1933. The transceiver 1933 performs digital signal processing on the control channel to recover the instructions, such as in the form of digital data, from the control channel. The clock signal is used to synchronize timing of the digital control channel processing. The transceiver 1933 then performs frequency conversion

of the first modulated signal at the first carrier frequency to the first modulated signal in the first spectral segment in accordance with the instructions and based on an analog (and/or digital) signal processing of the first modulated signal and utilizing the reference signal to reduce distortion during the converting process. The transceiver 1933 wirelessly transmits the first modulated signal in the first spectral segment for direct communication with one or more mobile communication devices in range of the communication node 1804B-E as free space wireless signals.

[0223] In various embodiments, the transceiver 1936B receives a second modulated signal at a second carrier frequency in an uplink spectral segment 1910 from other network elements such as one or more other communication nodes 1804B-E that are downstream from the communication node 1804B-E that is shown. The second modulated signal can include one or more uplink communication channels conforming to a signaling protocol such as a LTE or other 4G wireless protocol, a 5G wireless communication protocol, an ultra-wideband protocol, a 802.11 or other wireless local area network protocol and/or other communication protocol. In particular, one or more mobile communication devices generate the second modulated signal in a second spectral segment such as an original/native frequency band and the downstream network element performs frequency conversion on the second modulated signal in the second spectral segment to the second modulated signal at the second carrier frequency and transmits the second modulated signal at the second carrier frequency in an uplink spectral segment 1910 as received by the communication node 1804B-E shown. The transceiver 1936B operates to send the second modulated signal at the second carrier frequency to amplifier 1938, via the duplexer/diplexer assembly 1924, for amplification and retransmission via the transceiver 1936A back to the communication node 1804A or upstream communication nodes 1804B-E for further retransmission back to a base station, such as macro base station 1802, for processing.

[0224] The transceiver 1933 may also receive a second modulated signal in the second spectral segment from one or more mobile communication devices in range of the communication node 1804B-E. The transceiver 1933 operates to perform frequency conversion on the second modulated signal in the second spectral segment to the second modulated signal at the second carrier frequency, for example, under control of the instructions received via the control channel, inserts the reference signals, control channels and/or clock signals for use by communication node 1804A in reconverting the second modulated signal back to the original/native spectral segments and sends the second modulated signal at the second carrier

frequency, via the duplexer/diplexer assembly 1924 and amplifier 1938, to the transceiver 1936A for amplification and retransmission back to the communication node 1804A or upstream communication nodes 1804B-E for further retransmission back to a base station, such as macro base station 1802, for processing.

[0225] Turning now to **FIG. 19D,** a graphical diagram 1940 illustrating an example, non-limiting embodiment of a frequency spectrum is shown. In particular, a spectrum 1942 is shown for a distributed antenna system that conveys modulated signals that occupy frequency channels of a downlink segment 1906 or uplink spectral segment 1910 after they have been converted in frequency (e.g. via up-conversion or down-conversion) from one or more original/native spectral segments into the spectrum 1942.

[0226] In the example presented, the downstream (downlink) channel band 1944 includes a plurality of downstream frequency channels represented by separate downlink spectral segments 1906. Likewise the upstream (uplink) channel band 1946 includes a plurality of upstream frequency channels represented by separate uplink spectral segments 1910. The spectral shapes of the separate spectral segments are meant to be placeholders for the frequency allocation of each modulated signal along with associated reference signals, control channels and clock signals. The actual spectral response of each frequency channel in a downlink spectral segment 1906 or uplink spectral segment 1910 will vary based on the protocol and modulation employed and further as a function of time.

[0227] The number of the uplink spectral segments 1910 can be less than or greater than the number of the downlink spectral segments 1906 in accordance with an asymmetrical communication system. In this case, the upstream channel band 1946 can be narrower or wider than the downstream channel band 1944. In the alternative, the number of the uplink spectral segments 1910 can be equal to the number of the downlink spectral segments 1906 in the case where a symmetrical communication system is implemented. In this case, the width of the upstream channel band 1946 can be equal to the width of the downstream channel band 1944 and bit stuffing or other data filling techniques can be employed to compensate for variations in upstream traffic. While the downstream channel band 1944 is shown at a lower frequency than the upstream channel band 1946, in other embodiments, the downstream channel band 1844 can be at a higher frequency than the upstream channel band 1946. In addition, the number of spectral segments and their respective frequency positions in spectrum 1942 can change dynamically over time. For example, a general control channel can be provided in the spectrum 1942 (not shown) which can indicate to communication nodes 1804 the frequency

position of each downlink spectral segment 1906 and each uplink spectral segment 1910. Depending on traffic conditions, or network requirements necessitating a reallocation of bandwidth, the number of downlink spectral segments 1906 and uplink spectral segments 1910 can be changed by way of the general control channel. Additionally, the downlink spectral segments 1906 and uplink spectral segments 1910 do not have to be grouped separately. For instance, a general control channel can identify a downlink spectral segment 1906 being followed by an uplink spectral segment 1910 in an alternating fashion, or in any other combination which may or may not be symmetric. It is further noted that instead of utilizing a general control channel, multiple control channels can be used, each identifying the frequency position of one or more spectral segments and the type of spectral segment (i.e., uplink or downlink).

[0228] Further, while the downstream channel band 1944 and upstream channel band 1946 are shown as occupying a single contiguous frequency band, in other embodiments, two or more upstream and/or two or more downstream channel bands can be employed, depending on available spectrum and/or the communication standards employed. Frequency channels of the uplink spectral segments 1910 and downlink spectral segments 1906 can be occupied by frequency converted signals modulated formatted in accordance with a DOCSIS 2.0 or higher standard protocol, a WiMAX standard protocol, an ultra-wideband protocol, a 802.11 standard protocol, a 4G or 5G voice and data protocol such as an LTE protocol and/or other standard communication protocol. In addition to protocols that conform with current standards, any of these protocols can be modified to operate in conjunction with the system shown. For example, a 802.11 protocol or other protocol can be modified to include additional guidelines and/or a separate data channel to provide collision detection/multiple access over a wider area (e.g. allowing devices that are communicating via a particular frequency channel to hear one another). In various embodiments all of the uplink frequency channels of the uplink spectral segments 1910 and downlink frequency channel of the downlink spectral segments 1906 are all formatted in accordance with the same communications protocol. In the alternative however, two or more differing protocols can be employed on both the uplink frequency channels of one or more uplink spectral segments 1910 and downlink frequency channels of one or more downlink spectral segments 1906 to, for example, be compatible with a wider range of client devices and/or operate in different frequency bands.

[0229] It should be noted that, the modulated signals can be gathered from differing original/native spectral segments for aggregation into the spectrum 1942. In this fashion, a first

portion of uplink frequency channels of an uplink spectral segment 1910 may be adjacent to a second portion of uplink frequency channels of the uplink spectral segment 1910 that have been frequency converted from one or more differing original/native spectral segments. Similarly, a first portion of downlink frequency channels of a downlink spectral segment 1906 may be adjacent to a second portion of downlink frequency channels of the downlink spectral segment 1906 that have been frequency converted from one or more differing original/native spectral segments. For example, one or more 2.4 GHz 802.11 channels that have been frequency converted may be adjacent to one or more 5.8 GHz 802.11 channels that have also been frequency converted to a spectrum 1942 that is centered at 80 GHz. It should be noted that each spectral segment can have an associated reference signal such as a pilot signal that can be used in generating a local oscillator signal at a frequency and phase that provides the frequency conversion of one or more frequency channels of that spectral segment from its placement in the spectrum 1942 back into it original/native spectral segment.

[0230] Turning now to **FIG. 19E**, a graphical diagram 1950 illustrating an example, non-limiting embodiment of a frequency spectrum is shown. In particular a spectral segment selection is presented as discussed in conjunction with signal processing performed on the selected spectral segment by transceivers 1930 of communication node 1840A or transceiver 1932 of communication node 1804B-E. As shown, a particular uplink frequency portion 1958 including one of the uplink spectral segments 1910 of uplink frequency channel band 1946 and a particular downlink frequency portion 1956 including one of the downlink spectral segments 1906 of downlink channel frequency band 1944 is selected to be passed by channel selection filtration, with the remaining portions of uplink frequency channel band 1946 and downlink channel frequency band 1944 being filtered out – i.e. attenuated so as to mitigate adverse effects of the processing of the desired frequency channels that are passed by the transceiver. It should be noted that while a single particular uplink spectral segment 1910 and a particular downlink spectral segment 1906 are shown as being selected, two or more uplink and/or downlink spectral segments may be passed in other embodiments.

[0231] While the transceivers 1930 and 1932 can operate based on static channel filters with the uplink and downlink frequency portions 1958 and 1956 being fixed, as previously discussed, instructions sent to the transceivers 1930 and 1932 via the control channel can be used to dynamically configure the transceivers 1930 and 1932 to a particular frequency selection. In this fashion, upstream and downstream frequency channels of corresponding spectral segments can be dynamically allocated to various communication nodes by the macro

base station 1802 or other network element of a communication network to optimize performance by the distributed antenna system.

[0232] Turning now to **FIG. 19F,** a graphical diagram 1960 illustrating an example, non-limiting embodiment of a frequency spectrum is shown. In particular, a spectrum 1962 is shown for a distributed antenna system that conveys modulated signals occupying frequency channels of uplink or downlink spectral segments after they have been converted in frequency (e.g. via up-conversion or down-conversion) from one or more original/native spectral segments into the spectrum 1962.

[0233] As previously discussed two or more different communication protocols can be employed to communicate upstream and downstream data. When two or more differing protocols are employed, a first subset of the downlink frequency channels of a downlink spectral segment 1906 can be occupied by frequency converted modulated signals in accordance with a first standard protocol and a second subset of the downlink frequency channels of the same or a different downlink spectral segment 1910 can be occupied by frequency converted modulated signals in accordance with a second standard protocol that differs from the first standard protocol. Likewise a first subset of the uplink frequency channels of an uplink spectral segment 1910 can be received by the system for demodulation in accordance with the first standard protocol and a second subset of the uplink frequency channels of the same or a different uplink spectral segment 1910 can be received in accordance with a second standard protocol for demodulation in accordance with the second standard protocol that differs from the first standard protocol.

[0234] In the example shown, the downstream channel band 1944 includes a first plurality of downstream spectral segments represented by separate spectral shapes of a first type representing the use of a first communication protocol. The downstream channel band 1944' includes a second plurality of downstream spectral segments represented by separate spectral shapes of a second type representing the use of a second communication protocol. Likewise the upstream channel band 1946 includes a first plurality of upstream spectral segments represented by separate spectral shapes of the first type representing the use of the first communication protocol. The upstream channel band 1946' includes a second plurality of upstream spectral segments represented by separate spectral shapes of the second type representing the use of the second communication protocol. These separate spectral shapes are meant to be placeholders for the frequency allocation of each individual spectral segment along with associated reference signals, control channels and/or clock signals. While the individual

channel bandwidth is shown as being roughly the same for channels of the first and second type, it should be noted that upstream and downstream channel bands 1944, 1944', 1946 and 1946' may be of differing bandwidths. Additionally, the spectral segments in these channel bands of the first and second type may be of differing bandwidths, depending on available spectrum and/or the communication standards employed.

[0235] Turning now to **FIG. 19G,** a graphical diagram 1970 illustrating an example, non-limiting embodiment of a frequency spectrum is shown. In particular a portion of the spectrum 1942 or 1962 of FIGs. 19D-19F is shown for a distributed antenna system that conveys modulated signals in the form of channel signals that have been converted in frequency (e.g. via up-conversion or down-conversion) from one or more original/native spectral segments.

[0236] The portion 1972 includes a portion of a downlink or uplink spectral segment 1906 and 1910 that is represented by a spectral shape and that represents a portion of the bandwidth set aside for a control channel, reference signal, and/or clock signal. The spectral shape 1974, for example, represents a control channel that is separate from reference signal 1979 and a clock signal 1978. It should be noted that the clock signal 1978 is shown with a spectral shape representing a sinusoidal signal that may require conditioning into the form of a more traditional clock signal. In other embodiments however, a traditional clock signal could be sent as a modulated carrier wave such by modulating the reference signal 1979 via amplitude modulation or other modulation technique that preserves the phase of the carrier for use as a phase reference. In other embodiments, the clock signal could be transmitted by modulating another carrier wave or as another signal. Further, it is noted that both the clock signal 1978 and the reference signal 1979 are shown as being outside the frequency band of the control channel 1974.

[0237] In another example, the portion 1975 includes a portion of a downlink or uplink spectral segment 1906 and 1910 that is represented by a portion of a spectral shape that represents a portion of the bandwidth set aside for a control channel, reference signal, and/or clock signal. The spectral shape 1976 represents a control channel having instructions that include digital data that modulates the reference signal, via amplitude modulation, amplitude shift keying or other modulation technique that preserves the phase of the carrier for use as a phase reference. The clock signal 1978 is shown as being outside the frequency band of the spectral shape 1976. The reference signal, being modulated by the control channel instructions, is in effect a subcarrier of the control channel and is in-band to the control channel. Again, the clock signal 1978 is shown with a spectral shape representing a sinusoidal signal, in other

embodiments however, a traditional clock signal could be sent as a modulated carrier wave or other signal. In this case, the instructions of the control channel can be used to modulate the clock signal 1978 instead of the reference signal.

[0238] Consider the following example, where the control channel 1976 is carried via modulation of a reference signal in the form of a continuous wave (CW) from which the phase distortion in the receiver is corrected during frequency conversion of the downlink or uplink spectral segment 1906 and 1910 back to its original/native spectral segment. The control channel 1976 can be modulated with a robust modulation such as pulse amplitude modulation, binary phase shift keying, amplitude shift keying or other modulation scheme to carry instructions between network elements of the distributed antenna system such as network operations, administration and management traffic and other control data. In various embodiments, the control data can include without limitation:

- Status information that indicates online status, offline status, and network performance parameters of each network element.
- Network device information such as module names and addresses, hardware and software versions, device capabilities, etc.
- Spectral information such as frequency conversion factors, channel spacing, guard bands, uplink/downlink allocations, uplink and downlink channel selections, etc.
- Environmental measurements such as weather conditions, image data, power outage information, line of sight blockages, etc.

[0239] In a further example, the control channel data can be sent via ultra-wideband (UWB) signaling. The control channel data can be transmitted by generating radio energy at specific time intervals and occupying a larger bandwidth, via pulse-position or time modulation, by encoding the polarity or amplitude of the UWB pulses and/or by using orthogonal pulses. In particular, UWB pulses can be sent sporadically at relatively low pulse rates to support time or position modulation, but can also be sent at rates up to the inverse of the UWB pulse bandwidth. In this fashion, the control channel can be spread over an UWB spectrum with relatively low power, and without interfering with CW transmissions of the reference signal and/or clock signal that may occupy in-band portions of the UWB spectrum of the control channel.

[0240] Turning now to **FIG. 19H,** a block diagram 1980 illustrating an example, non-limiting embodiment of a transmitter is shown. In particular, a transmitter 1982 is shown for use with, for example, a receiver 1981 and a digital control channel processor 1995 in a transceiver, such as transceiver 1933 presented in conjunction with FIG. 19C. As shown, the

transmitter 1982 includes an analog front-end 1986, clock signal generator 1989, a local oscillator 1992, a mixer 1996, and a transmitter front end 1984.

[0241] The amplified first modulated signal at the first carrier frequency together with the reference signals, control channels and/or clock signals are coupled from the amplifier 1938 to the analog front-end 1986. The analog front end 1986 includes one or more filters or other frequency selection to separate the control channel signal 1987, a clock reference signal 1978, a pilot signal 1991 and one or more selected channels signals 1994.

[0242] The digital control channel processor 1995 performs digital signal processing on the control channel to recover the instructions, such as via demodulation of digital control channel data, from the control channel signal 1987. The clock signal generator 1989 generates the clock signal 1990, from the clock reference signal 1978, to synchronize timing of the digital control channel processing by the digital control channel processor 1995. In embodiments where the clock reference signal 1978 is a sinusoid, the clock signal generator 1989 can provide amplification and limiting to create a traditional clock signal or other timing signal from the sinusoid. In embodiments where the clock reference signal 1978 is a modulated carrier signal, such as a modulation of the reference or pilot signal or other carrier wave, the clock signal generator 1989 can provide demodulation to create a traditional clock signal or other timing signal.

[0243] In various embodiments, the control channel signal 1987 can be either a digitally modulated signal in a range of frequencies separate from the pilot signal 1991 and the clock reference 1988 or as modulation of the pilot signal 1991. In operation, the digital control channel processor 1995 provides demodulation of the control channel signal 1987 to extract the instructions contained therein in order to generate a control signal 1993. In particular, the control signal 1993 generated by the digital control channel processor 1995 in response to instructions received via the control channel can be used to select the particular channel signals 1994 along with the corresponding pilot signal 1991 and/or clock reference 1988 to be used for converting the frequencies of channel signals 1994 for transmission via wireless interface 1811. It should be noted that in circumstances where the control channel signal 1987 conveys the instructions via modulation of the pilot signal 1991, the pilot signal 1991 can be extracted via the digital control channel processor 1995 rather than the analog front-end 1986 as shown.

[0244] The digital control channel processor 1995 may be implemented via a processing module such as a microprocessor, micro-controller, digital signal processor, microcomputer, central processing unit, field programmable gate array, programmable logic device, state

machine, logic circuitry, digital circuitry, an analog to digital converter, a digital to analog converter and/or any device that manipulates signals (analog and/or digital) based on hard coding of the circuitry and/or operational instructions. The processing module may be, or further include, memory and/or an integrated memory element, which may be a single memory device, a plurality of memory devices, and/or embedded circuitry of another processing module, module, processing circuit, and/or processing unit. Such a memory device may be a read-only memory, random access memory, volatile memory, non-volatile memory, static memory, dynamic memory, flash memory, cache memory, and/or any device that stores digital information. Note that if the processing module includes more than one processing device, the processing devices may be centrally located (e.g., directly coupled together via a wired and/or wireless bus structure) or may be distributedly located (e.g., cloud computing via indirect coupling via a local area network and/or a wide area network). Further note that the memory and/or memory element storing the corresponding operational instructions may be embedded within, or external to, the microprocessor, micro-controller, digital signal processor, microcomputer, central processing unit, field programmable gate array, programmable logic device, state machine, logic circuitry, digital circuitry, an analog to digital converter, a digital to analog converter or other device. Still further note that, the memory element may store, and the processing module executes, hard coded and/or operational instructions corresponding to at least some of the steps and/or functions described herein and such a memory device or memory element can be implemented as an article of manufacture.

[0245] The local oscillator 1992 generates the local oscillator signal 1997 utilizing the pilot signal 1991 to reduce distortion during the frequency conversion process. In various embodiments the pilot signal 1991 is at the correct frequency and phase of the local oscillator signal 1997 to generate the local oscillator signal 1997 at the proper frequency and phase to convert the channel signals 1994 at the carrier frequency associated with their placement in the spectrum of the distributed antenna system to their original/native spectral segments for transmission to fixed or mobile communication devices. In this case, the local oscillator 1992 can employ bandpass filtration and/or other signal conditioning to generate a sinusoidal local oscillator signal 1997 that preserves the frequency and phase of the pilot signal 1991. In other embodiments, the pilot signal 1991 has a frequency and phase that can be used to derive the local oscillator signal 1997. In this case, the local oscillator 1992 employs frequency division, frequency multiplication or other frequency synthesis, based on the pilot signal 1991, to generate the local oscillator signal 1997 at the proper frequency and phase to convert the

channel signals 1994 at the carrier frequency associated with their placement in the spectrum of the distributed antenna system to their original/native spectral segments for transmission to fixed or mobile communication devices.

[0246] The mixer 1996 operates based on the local oscillator signal 1997 to shift the channel signals 1994 in frequency to generate frequency converted channel signals 1998 at their corresponding original/native spectral segments. While a single mixing stage is shown, multiple mixing stages can be employed to shift the channel signals to baseband and/or one or more intermediate frequencies as part of the total frequency conversion. The transmitter (Xmtr) front-end 1984 includes a power amplifier and impedance matching to wirelessly transmit the frequency converted channel signals 1998 as a free space wireless signals via one or more antennas, such as antennas 1824, to one or more mobile or fixed communication devices in range of the communication node 1804B-E.

[0247] Turning now to **FIG. 19I,** a block diagram 1985 illustrating an example, non-limiting embodiment of a receiver is shown. In particular, a receiver 1981 is shown for use with, for example, transmitter 1982 and digital control channel processor 1995 in a transceiver, such as transceiver 1933 presented in conjunction with FIG. 19C. As shown, the receiver 1981 includes an analog receiver (RCVR) front-end 1983, local oscillator 1992, and mixer 1996. The digital control channel processor 1995 operates under control of instructions from the control channel to generate the pilot signal 1991, control channel signal 1987 and clock reference signal 1978.

[0248] The control signal 1993 generated by the digital control channel processor 1995 in response to instructions received via the control channel can also be used to select the particular channel signals 1994 along with the corresponding pilot signal 1991 and/or clock reference 1988 to be used for converting the frequencies of channel signals 1994 for reception via wireless interface 1811. The analog receiver front end 1983 includes a low noise amplifier and one or more filters or other frequency selection to receive one or more selected channels signals 1994 under control of the control signal 1993.

[0249] The local oscillator 1992 generates the local oscillator signal 1997 utilizing the pilot signal 1991 to reduce distortion during the frequency conversion process. In various embodiments the local oscillator employs bandpass filtration and/or other signal conditioning, frequency division, frequency multiplication or other frequency synthesis, based on the pilot signal 1991, to generate the local oscillator signal 1997 at the proper frequency and phase to frequency convert the channel signals 1994, the pilot signal 1991, control channel signal 1987

and clock reference signal 1978 to the spectrum of the distributed antenna system for transmission to other communication nodes 1804A-E. In particular, the mixer 1996 operates based on the local oscillator signal 1997 to shift the channel signals 1994 in frequency to generate frequency converted channel signals 1998 at the desired placement within spectrum spectral segment of the distributed antenna system for coupling to the amplifier 1938, to transceiver 1936A for amplification and retransmission via the transceiver 1936A back to the communication node 1804A or upstream communication nodes 1804B-E for further retransmission back to a base station, such as macro base station 1802, for processing. Again, while a single mixing stage is shown, multiple mixing stages can be employed to shift the channel signals to baseband and/or one or more intermediate frequencies as part of the total frequency conversion.

[0250] **FIG. 20A** is a block diagram of an example, non-limiting embodiment of a transmission device and **FIG. 20B** provides example, non-limiting embodiments of various coupler shapes in accordance with various aspects described herein. In particular, a transmission device 2000 is shown that includes a plurality of transceivers (Xcvr) 2020, each having a transmitting device (or transmitter) and/or a receiving device (receiver) that is coupled to a corresponding waveguide 2022 and coupler 2004. The plurality of couplers 2004 can be referred to collectively as a "coupling module". Each coupler 2004 of such a coupling module includes a receiving portion 2010 that receives an electromagnetic wave 2006 conveying first data from a transmitting device of transceiver 2020 via waveguide 2022. A guiding portion 2012 of the coupler 2004 guides a first electromagnetic wave 2006 to a junction 2014 for coupling the electromagnetic wave 2006 to a transmission medium 2002. In the embodiment shown, the junction 2014 includes an air gap for illustrative purposes, however other configurations are possible both with, and without an air gap. The guiding portion 2012 includes a coupling end 2015 that terminates at the junction 2014 that is shown with a particular tapered shape; however other shapes and configurations are likewise possible. The coupling end 2015 of the coupler 2004 can, for example, have a tapered, rounded or beveled shape (2050, 2052, 2054 or 2056) or a more complex, multidimensional shape. In particular, the number of planes that intersect the coupling device to create the taper, bevel or rounding can be two or greater, so that the resultant shape is more complex than a simple angular cut along a single plane.

[0251] In operation, tapering, rounding or beveling the coupling end 2015, via shapes 2025-2028 for example, can reduce or substantially eliminate reflections of electromagnetic

waves back along the guiding portions, while also enhancing the coupling (e.g., a coupling efficiency) of these electromagnetic waves, to and from the transmission medium 2002. Furthermore, the receiving portion 2010 can have a receiving end that is also tapered, rounded or beveled to enhance the coupling to and from the waveguide 2022 and the transceiver 2020. This receiving end, while not specifically shown, can be recessed within the waveguide 2022. The cross section of the guiding portion 2012, the waveguide 2022, the receiving portion 2010, and the coupling end 2015 can each be any of the shapes 2030-2036.

[0252] Each electromagnetic wave 2006 propagates via at least one first guided-wave mode. The coupling of the electromagnetic waves 2006 to the transmission medium 2002 via one or more of the junctions 2014 forms a plurality of electromagnetic waves 2008 that are guided to propagate along the outer surface of the transmission medium 2002 via at least one second guided-wave mode that can differ from the first guided-wave mode. The transmission medium 2002 can be a single wire transmission medium or other transmission medium 125 of **FIG. 1** that supports the propagation of the electromagnetic waves 2008 along the outer surface of the transmission medium 2002 to convey the first data. It will be appreciated that the single wire transmission medium described herein can be comprised of multiple strands or wire segments that are bundled or braided together without departing from example embodiments.

[0253] In various embodiments, the electromagnetic waves 2006 propagate along a coupler 2004 via one or more first guided-wave modes that can include either exclusively or substantially exclusively a symmetrical (fundamental) mode, however other modes can optionally be included in addition or in the alternative. In accordance with these embodiments, the second guided-wave mode of the electromagnetic waves 2008 can, if supported by the characteristics of the transmission medium 2002, include at least one asymmetric (non-fundamental) mode that is not included in the guided-wave modes of the electromagnetic waves 2006 that propagate along each coupler 2004. For example, an insulated wire transmission medium can support at least one asymmetric (non-fundamental) mode in one embodiment. In operation, the junctions 2014 induce the electromagnetic waves 2008 on transmission medium 2002 to optionally include a symmetric (fundamental) mode, but also one or more asymmetric (non-fundamental) modes not included in the guided-wave modes of the electromagnetic wave 2006 that propagate along the coupler 2004.

[0254] More generally, consider the one or more first guided-wave modes to be defined by the set of modes *S1* where:

$$S1 = (m11, m12, m13, \ldots)$$

[0255] And where the individual modes *m11, m12, m13, ...* can each be either a symmetrical (or fundamental) mode or an asymmetrical (or non-fundamental) mode that propagate more than a trivial distance, i.e. that propagate along the length of the guiding portion 2012 of a coupler 2004 from the receiving end 2010 to the other end 2015. In an embodiment, the guided-wave mode or modes of the electromagnetic wave 2006 includes a field distribution that, at the junction 2014, has a great degree of overlap with the transmission medium 2002 so as to couple a substantial portion or the most electromagnetic energy to the transmission medium. In addition to reducing reflections, the tapering, rounding and/or beveling of the coupling end 2015 can also promote such an effect (e.g., high coupling efficiency or energy transfer). As the cross sectional area of the coupler decreases along the coupling end 2105, the size of the field distribution can increase, encompassing more field strength at or around the transmission medium 2002 at the junction 2014. In one example, the field distribution induced by the coupler 2004 at the junction 2014 has a shape that approximates one or more propagation modes of the transmission medium itself, increasing the amount of electromagnetic energy that is converted to the propagating modes of the transmission medium.

[0256] Also consider the one or more second guided-wave modes to be defined by the set of modes *S2* where:

$$S2 = (m21, m22, m23, \ldots)$$

And, the individual modes *m21, m22, m23, ...* can each be either a symmetrical (or fundamental) mode or an asymmetrical (or non-fundamental) mode that propagate along the length of the transmission medium 2002 more than a trivial distance, i.e. that propagate sufficiently to reach a remote transmission device coupled at a different location on the transmission medium 2002.

[0257] In various embodiments, that condition that at least one first guided-wave mode is different from at least one second guided-wave mode implies that $S1 \neq S2$. In particular, *S1* may be a proper subset of *S2, S2* may be a proper subset of *S1*, or the intersection between *S1* and *S2* may be the null set.

[0258] In addition to operating as a transmitter, the transmission device 2000 can operate as or include a receiver as well. In this mode of operation, a plurality of electromagnetic waves 2018 conveys second data that also propagates along the outer surface of the transmission medium 2002, but in the opposite direction of the electromagnetic waves 2008. Each junction 2014 couples one of the electromagnetic waves 2018 from the transmission medium 2002 to form an electromagnetic wave 2016 that is guided to a receiver of the corresponding transceiver

2020 by the guiding portion 2012.

[0259] In various embodiments, the first data conveyed by the plurality of second electromagnetic waves 2008 includes a plurality of data streams that differ from one another and wherein the each of the plurality of first electromagnetic waves 2006 conveys one of the plurality of data streams. More generally, the transceivers 2020 operate to convey either the same data stream or different data streams via time division multiplexing, or some other form of multiplexing, such as frequency division multiplexing, or mode division multiplexing. In this fashion, the transceivers 2020 can be used in conjunction with a MIMO transmission system to send and receive full duplex data via axial diversity, cyclic delay diversity, spatial coding, space time block coding, space frequency block coding, hybrid space time/frequency block coding, single stream multi-coupler spatial mapping or other transmission/reception scheme.

[0260] While the transmission device 2000 is shown with two transceivers 2020 and two couplers 2004 arranged at the top and bottom of the transmission medium 2002, other configurations can include three or more transceivers and corresponding couplers. For example, a transmission device 2000 with four transceivers 2020 and four couplers 2004 can be arranged angularly around the outer surface of a cylindrical transmission medium at equidistant orientations of *0, π/2, π, and 3π/4*. Considering a further example, a transmission device 2000 with *n* transceivers 2020 can include *n* couplers 2004 arranged angularly around the outer surface of a cylindrical transmission medium at angles 2π/n apart. It should be noted however that unequal angular displacements between couplers can also be used.

[0261] Turning now to **FIG. 20C,** a block diagram is shown illustrating an example, non-limiting embodiment of a coupling system in accordance with various aspects described herein. In particular, a coupling system is shown for use with the transmission system of **FIG. 20A**, transmission device 101 or 102 presented in conjunction with **FIG. 1**, with any of the waveguide systems previously described, and/or as a launcher that launches guided electromagnetic waves on a transmission medium 2002. The coupling system includes waveguide 2022, a stub coupler 2044 and an optional reflective plate 2046.

[0262] In operation, the transceiver 2020 sends and receives RF signals such as millimeter wave or other microwave frequency signals waves via the waveguide 2022. The RF signals can convey data to communicate with one or more base stations, mobile devices, a building, a broadband communication network such as the Internet and/or any other device or system utilizing any of various signaling protocols (e.g., LTE, WiFi, WiMAX, Ultrawideband, IEEE

802.xx, 5G wireless, DOCSIS, etc.). The transceiver 2020 can be implemented using a klystron, magnetron, travelling wave tube, and/or other RF transceiver circuitry.

[0263] In various embodiments, the waveguide 2022 is a hollow waveguide that guides an electromagnetic wave conveying data from the transceiver 2020 to the stub coupler 2044 for propagation along the transmission medium 2002. In a reciprocal fashion, the waveguide 2022 can guide an electromagnetic wave travelling in the opposite direction conveying data from the transmission medium 2002, via the stub coupler 2044, to the transceiver 2020.

[0264] In an embodiment, waveguide 2022 can include a cylindrical or non-cylindrical metal (which, for example, can be hollow with any of the cross sectional shapes 2030-2036 depicted in **FIG. 20B**) or other conducting or non-conducting waveguide and an end of the stub coupler 2044 can be placed inside of the waveguide 2022 as shown, or otherwise in proximity to, the waveguide 2022 such that when the transceiver 2020 generates an RF signal transmission, a guided electromagnetic wave from the waveguide 2022 couples to stub coupler 2044 and propagates as a guided wave about the waveguide surface of the stub coupler 2044. For example, the guided wave can propagate partially or fully around the waveguide surface of the stub coupler 2044. While not expressly shown, the end of the stub coupler 2044 inserted in the waveguide 2022 (the "receiving end") can be tapered, rounded or beveled and have a selected length to minimize return losses and/or otherwise enhance the coupling to and from the waveguide 2022 and the transceiver 2020. For example, any of the shapes 2025-2028 depicted in **FIG. 20B** can be used for this purpose.

[0265] For example, before coupling to the stub coupler 2044, the one or more waveguide modes of the guided wave generated by the transceiver 2020 and travelling within or otherwise along the waveguide 2022 can couple to the stub coupler 2044 to induce, via the junction between the waveguide 2022 and the stub coupler 2044 at the receiving end, one or more wave propagation modes of the guided wave that propagates along the stub coupler 2044. The stub coupler 2044, itself operates as a waveguide. However, the wave propagation modes of the guided wave that propagates along the stub coupler 2044 can be different than the waveguide modes due to the different characteristics of the waveguide 2022 and the stub coupler 2044. In some embodiments, a guided wave can propagate in part on the outer surface of the stub coupler 2044 and in part inside the stub coupler 2044. In other embodiments, the guided wave can propagate substantially or completely on the outer surface of the stub coupler 2044. In yet other embodiments, the guided wave can propagate substantially or completely inside the stub coupler 2044. In this latter embodiment, the guided wave can radiate at an end of the stub

coupler 2044 (such as the tapered end shown) for coupling to the transmission medium 2002. Similarly, if a guided wave is incoming (coupled to the stub coupler 2044 from the transmission medium 2002), the guided wave then enters the waveguide 2022.

[0266] In a specific example however, the wave propagation modes of the guided wave propagating along the stub coupler 2044 can comprise the fundamental transverse electromagnetic mode (Quasi-TEM_{00}), where only small electrical and/or magnetic fields extend in the direction of propagation, and the electric and magnetic fields extend outwards from the stub coupler 2044 while the guided waves propagate along the stub coupler 2044. The wave propagation modes of the guided wave propagating along the stub coupler 2044 can further comprise HE_{11}, EH_{1m}, TM_{0m}, (where m = 1, 2, ...) or other non-fundamental and/or asymmetrical modes. The specific propagation modes of the stub coupler 2044 may or may not exist inside the waveguide 2022. For example, when the waveguide 2022 has a hollow metallic structure, the waveguide 2022 may not support the fundamental transverse electromagnetic mode (Quasi-TEM_{00}) and/or one or more other non-fundamental and/or asymmetrical modes. The waveguide modes generated by the transceiver 2020 for propagation along the waveguide 2022 can be selected to be waveguide modes that can effectively and efficiently generate the particular guided wave propagation modes of stub coupler 2044.

[0267] As discussed, the stub coupler 2044 guides electromagnetic waves from the waveguide 2022 along a portion of a transmission medium via the straight end for coupling the first electromagnetic wave to the transmission medium. The stub coupler 2044 can be conductorless and made of a dielectric material, or other low-loss insulator (e.g., Teflon, polyethylene and etc.), or made of a conducting (e.g., metallic, non-metallic, etc.) material, or any combination of the foregoing materials. The straight end of the stub coupler 2044 is placed near the transmission medium 2002 in order to facilitate coupling of guided electromagnetic waves between the stub coupler 2044 and the transmission medium 2002, to launch a guided electromagnetic wave on the transmission medium and/or to receive a guided electromagnetic wave from the transmission medium 2002.

[0268] In the embodiment shown, the stub coupler 2044 is curved for connection to the waveguide 2022, with a straight end having a length d1 that is clamped to the transmission medium 2002 via clamp 2045. The clamp 2045 can be a nylon cable tie or other type of non-conducting/dielectric material that is either separate from the stub coupler 2044 or constructed as an integrated component of the stub coupler 2044. Also note that while a clamp 2045 is shown, the stub coupler 2044 can likewise be tied, fastened, or otherwise mechanically coupled

to transmission medium 2002. While a particular curved shape is shown other shapes, including more gradual arcs may likewise be employed. When the straight end of the stub coupler 2044 is fastened to the transmission medium 2002, the straight end of the stub coupler 2044 is adjacent to (and not necessarily touching as shown), and either parallel to or substantially parallel to the transmission medium 2002.

[0269] As discussed above, a guided electromagnetic wave travelling along the stub coupler 2044 propagates via a first guided wave mode and a second guided mode. The portion of the stub coupler 2044 at the straight end has a length, d1, that supports the coupling of the second guided wave mode for propagation along the outer surface of the transmission medium, while suppressing the first guided wave mode. As shown, the stub coupler 2044 is separated from the transmission medium by a gap 2048. The gap 2048 can be an air gap as shown. In other embodiments however, the gap 2048 can be filled with a low loss dielectric, such as a dielectric foam or other dielectric that, for example, provides mechanical support between the transmission medium 2002 and the stub coupler 2044. It should be noted that the selection of the dielectric material to fill the gap 2048 and/or the spacing of the gap 2048 itself can further be selected to support the coupling of the second guided wave mode for propagation along the outer surface of the transmission medium 2002, while suppressing the first guided wave mode.

[0270] In various embodiments, the reflective plate 2046 is included and aligned parallel to the straight end of the dielectric stub coupler 2044 such that the dielectric stub coupler 2044 is between the reflective plate 2046 and the transmission medium 2002. The reflective plate reflects electromagnetic signals from the bottom of the stub coupler 2044 in the orientation shown to enhance the coupling of the guided electromagnetic waves from the stub coupler 2044 to the transmission medium 2002 and further to reduce emissions. While shown as being closely spaced to the stub coupler 2044, in other embodiments, a gap can be included with a spacing that is selected to specifically support the coupling of the second guided wave mode for propagation along the outer surface of the transmission medium 2002, while suppressing the first guided wave mode. Such a gap, if included can be filled with air or a low loss dielectric, such as a dielectric foam or other dielectric that, for example, provides mechanical support between the reflective plate 2046 and the stub coupler 2044.

[0271] In a specific example, the stub coupler 2044 guides the electromagnetic wave to a junction via a first guided wave mode, such as a quasi TEM_{00} and at least one second guided wave mode such as HE_{11}, EH_{1m}, TM_{0m}, (where m = 1, 2, ...) or other non-fundamental and/or asymmetrical modes. While some of the energy of the electromagnetic wave that propagates

along the stub coupler 2044 is outside of the stub coupler 2044, the majority of the energy of this electromagnetic wave is contained within the stub coupler 2044. The junction between the stub coupler 2044 and the transmission medium 2002 along the straight end couples the electromagnetic wave to the transmission medium 2002 at an azimuthal angle corresponding to the bottom of the transmission medium. This coupling induces an electromagnetic wave that is guided to propagate along the outer surface of the transmission medium 2002 via the at least one second guided wave mode such as HE_{11}, EH_{1m}, TM_{0m}, (where m = 1, 2, ...) or other non-fundamental and/or asymmetrical modes, while suppressing the first (symmetrical/fundamental) guided wave mode. In particular, the stub coupler guides the second guided wave mode at a second speed that is higher than at least one first speed of the at least one first guided wave mode to promote the desired inducement/suppression.

[0272] Turning now to **FIG. 20D,** a block diagram is shown illustrating an example, non-limiting embodiment of a coupling system in accordance with various aspects described herein. In particular, a coupling system is shown for use with the transmission system of **FIG. 20A**, transmission device 101 or 102 presented in conjunction with **FIG. 1**, with any of the waveguide systems previously described, and/or as a launcher that launches guided electromagnetic waves on a transmission medium 2002. The coupling system includes waveguide 2022, a stub coupler 2054 and an optional reflective plate 2046. The coupling system includes many similar features to the coupling system of **FIG. 20C**, however, the longer stub coupler 2044 is replaced by the shorter stub coupler 2054 having a length d2 extending from the waveguide 2022 that supports cancellation of one or more modes from the second electromagnetic wave as the second electromagnetic wave is coupled to the transmission medium 2002. For example, the length, d2, can be properly chosen to suppress the particular mode of modes to be cancelled. In this fashion, an electromagnetic wave with predominantly one or more desired modes and only small or insubstantial portions of the one or more cancelled wave modes is guided by the transmission medium 2002 for propagation over significant distances such as 100 meters or more with low loss. While not expressly shown, the end of the stub coupler 2054 inserted in the waveguide 2022 (the "receiving end") can be tapered, rounded or beveled and have a selected length to minimize return losses and/or otherwise enhance the coupling to and from the waveguide 2022 and the transceiver 2020.

[0273] Like the stub coupler 2044 of **FIG. 20C**, a guided electromagnetic wave travelling along the stub coupler 2054 propagates via a first guided wave mode and a second guided mode. The stub coupler 2054 has a length, d2, that supports the coupling of the second guided

wave mode for propagation along the outer surface of the transmission medium, while supporting cancellation the first guided wave mode. As shown, the stub coupler 2054 is separated from the transmission medium by a gap 2048. The gap 2048 can be an air gap as shown. In other embodiments however, the gap 2048 can be filled with a low loss dielectric, such as a dielectric foam or other dielectric that, for example, provides mechanical support between the transmission medium 2002 and the stub coupler 2054. In should be noted that the selection of the dielectric material to fill the gap 2048 and/or the width of the gap 2048 its self can further be selected to support the coupling of the second guided wave mode for propagation along the outer surface of the transmission medium 2002, while optionally suppressing the first guided wave mode.

[0274] In various embodiments, the reflective plate 2046 is included and aligned parallel the dielectric stub coupler 2054 such that the dielectric stub coupler 2054 is between the reflective plate 2046 and the transmission medium 2002. The reflective plate 2046 reflects electromagnetic signals from the bottom of the stub coupler 2054 in the orientation shown to enhance the coupling of the guided electromagnetic waves from the stub coupler 2054 to the transmission medium 2002 and further to reduce emissions. While shown as being closely spaced to the stub coupler 2054, in other embodiments, a gap can be included with a spacing that is selected to specifically support the coupling of the second guided wave mode for propagation along the outer surface of the transmission medium 2002, while supporting cancellation of the first guided wave mode from the coupling to the transmission medium. Such a gap, if included can be filled with air or a low loss dielectric, such as a dielectric foam or other dielectric that, for example, provides mechanical support between the reflective plate 2046 and the stub coupler 2054.

[0275] In a specific example, the stub coupler 2054 guides the electromagnetic wave to a junction via a first guided wave mode, such as a quasi TEM_{00} and at least one second guided wave mode such as HE_{11}, EH_{1m}, TM_{0m}, (where m = 1, 2, ...) or other non-fundamental and/or asymmetrical modes. While some of the energy of the electromagnetic wave that propagates along the stub coupler 2054 is outside of the stub coupler 2054, the majority of the energy of this electromagnetic wave is contained within the stub coupler 2054. The junction between the stub coupler 2054 and the transmission medium 2002 couples the electromagnetic wave to the transmission medium 2002 at an azimuthal angle corresponding to the bottom of the transmission medium. This coupling induces an electromagnetic wave that is guided to propagate along the outer surface of the transmission medium 2002 via the at least one second

guided wave mode such as HE_{11}, EH_{1m}, TM_{0m}, (where m = 1, 2, ...) or other non-fundamental and/or asymmetrical mode. Choosing the length d2 properly for the first (symmetrical/fundamental) guided wave mode supports cancellation of the first guided wave mode.

[0276] Referring now to **FIG. 21**, there is illustrated a block diagram of a computing environment in accordance with various aspects described herein. In order to provide additional context for various embodiments of the embodiments described herein, **FIG. 21** and the following discussion are intended to provide a brief, general description of a suitable computing environment 2100 in which the various embodiments of the subject disclosure can be implemented. While the embodiments have been described above in the general context of computer-executable instructions that can run on one or more computers, those skilled in the art will recognize that the embodiments can be also implemented in combination with other program modules and/or as a combination of hardware and software.

[0277] Generally, program modules comprise routines, programs, components, data structures, etc., that perform particular tasks or implement particular abstract data types. Moreover, those skilled in the art will appreciate that the inventive methods can be practiced with other computer system configurations, comprising single-processor or multiprocessor computer systems, minicomputers, mainframe computers, as well as personal computers, hand-held computing devices, microprocessor-based or programmable consumer electronics, and the like, each of which can be operatively coupled to one or more associated devices.

[0278] As used herein, a processing circuit includes processor as well as other application specific circuits such as an application specific integrated circuit, digital logic circuit, state machine, programmable gate array or other circuit that processes input signals or data and that produces output signals or data in response thereto. It should be noted that while any functions and features described herein in association with the operation of a processor could likewise be performed by a processing circuit.

[0279] The terms “first,” “second,” “third,” and so forth, as used in the claims, unless otherwise clear by context, is for clarity only and doesn’t otherwise indicate or imply any order in time. For instance, “a first determination,” “a second determination,” and “a third determination,” does not indicate or imply that the first determination is to be made before the second determination, or vice versa, etc.

[0280] The illustrated embodiments of the embodiments herein can be also practiced in distributed computing environments where certain tasks are performed by remote processing

devices that are linked through a communications network. In a distributed computing environment, program modules can be located in both local and remote memory storage devices.

[0281] Computing devices typically comprise a variety of media, which can comprise computer-readable storage media and/or communications media, which two terms are used herein differently from one another as follows. Computer-readable storage media can be any available storage media that can be accessed by the computer and comprises both volatile and nonvolatile media, removable and non-removable media. By way of example, and not limitation, computer-readable storage media can be implemented in connection with any method or technology for storage of information such as computer-readable instructions, program modules, structured data or unstructured data.

[0282] Computer-readable storage media can comprise, but are not limited to, random access memory (RAM), read only memory (ROM), electrically erasable programmable read only memory (EEPROM),flash memory or other memory technology, compact disk read only memory (CD-ROM), digital versatile disk (DVD) or other optical disk storage, magnetic cassettes, magnetic tape, magnetic disk storage or other magnetic storage devices or other tangible and/or non-transitory media which can be used to store desired information. In this regard, the terms "tangible" or "non-transitory" herein as applied to storage, memory or computer-readable media, are to be understood to exclude only propagating transitory signals per se as modifiers and do not relinquish rights to all standard storage, memory or computer-readable media that are not only propagating transitory signals per se.

[0283] Computer-readable storage media can be accessed by one or more local or remote computing devices, e.g., via access requests, queries or other data retrieval protocols, for a variety of operations with respect to the information stored by the medium.

[0284] Communications media typically embody computer-readable instructions, data structures, program modules or other structured or unstructured data in a data signal such as a modulated data signal, e.g., a carrier wave or other transport mechanism, and comprises any information delivery or transport media. The term "modulated data signal" or signals refers to a signal that has one or more of its characteristics set or changed in such a manner as to encode information in one or more signals. By way of example, and not limitation, communication media comprise wired media, such as a wired network or direct-wired connection, and wireless media such as acoustic, RF, infrared and other wireless media.

[0285] With reference again to **FIG. 21**, the example environment 2100 for transmitting

and receiving signals via or forming at least part of a base station (e.g., base station devices 1504, macrocell site 1502, or base stations 1614) or central office (e.g., central office 1501 or 1611). At least a portion of the example environment 2100 can also be used for transmission devices 101 or 102. The example environment can comprise a computer 2102, the computer 2102 comprising a processing unit 2104, a system memory 2106 and a system bus 2108. The system bus 2108 couples system components including, but not limited to, the system memory 2106 to the processing unit 2104. The processing unit 2104 can be any of various commercially available processors. Dual microprocessors and other multiprocessor architectures can also be employed as the processing unit 2104.

[0286] The system bus 2108 can be any of several types of bus structure that can further interconnect to a memory bus (with or without a memory controller), a peripheral bus, and a local bus using any of a variety of commercially available bus architectures. The system memory 2106 comprises ROM 2110 and RAM 2112. A basic input/output system (BIOS) can be stored in a non-volatile memory such as ROM, erasable programmable read only memory (EPROM), EEPROM, which BIOS contains the basic routines that help to transfer information between elements within the computer 2102, such as during startup. The RAM 2112 can also comprise a high-speed RAM such as static RAM for caching data.

[0287] The computer 2102 further comprises an internal hard disk drive (HDD) 2114 (e.g., EIDE, SATA), which internal hard disk drive 2114 can also be configured for external use in a suitable chassis (not shown), a magnetic floppy disk drive (FDD) 2116, (e.g., to read from or write to a removable diskette 2118) and an optical disk drive 2120, (e.g., reading a CD-ROM disk 2122 or, to read from or write to other high capacity optical media such as the DVD). The hard disk drive 2114, magnetic disk drive 2116 and optical disk drive 2120 can be connected to the system bus 2108 by a hard disk drive interface 2124, a magnetic disk drive interface 2126 and an optical drive interface 2128, respectively. The interface 2124 for external drive implementations comprises at least one or both of Universal Serial Bus (USB) and Institute of Electrical and Electronics Engineers (IEEE) 1394 interface technologies. Other external drive connection technologies are within contemplation of the embodiments described herein.

[0288] The drives and their associated computer-readable storage media provide nonvolatile storage of data, data structures, computer-executable instructions, and so forth. For the computer 2102, the drives and storage media accommodate the storage of any data in a suitable digital format. Although the description of computer-readable storage media above refers to a hard disk drive (HDD), a removable magnetic diskette, and a removable optical

media such as a CD or DVD, it should be appreciated by those skilled in the art that other types of storage media which are readable by a computer, such as zip drives, magnetic cassettes, flash memory cards, cartridges, and the like, can also be used in the example operating environment, and further, that any such storage media can contain computer-executable instructions for performing the methods described herein.

[0289] A number of program modules can be stored in the drives and RAM 2112, comprising an operating system 2130, one or more application programs 2132, other program modules 2134 and program data 2136. All or portions of the operating system, applications, modules, and/or data can also be cached in the RAM 2112. The systems and methods described herein can be implemented utilizing various commercially available operating systems or combinations of operating systems. Examples of application programs 2132 that can be implemented and otherwise executed by processing unit 2104 include the diversity selection determining performed by transmission device 101 or 102.

[0290] A user can enter commands and information into the computer 2102 through one or more wired/wireless input devices, e.g., a keyboard 2138 and a pointing device, such as a mouse 2140. Other input devices (not shown) can comprise a microphone, an infrared (IR) remote control, a joystick, a game pad, a stylus pen, touch screen or the like. These and other input devices are often connected to the processing unit 2104 through an input device interface 2142 that can be coupled to the system bus 2108, but can be connected by other interfaces, such as a parallel port, an IEEE 1394 serial port, a game port, a universal serial bus (USB) port, an IR interface, etc.

[0291] A monitor 2144 or other type of display device can be also connected to the system bus 2108 via an interface, such as a video adapter 2146. It will also be appreciated that in alternative embodiments, a monitor 2144 can also be any display device (e.g., another computer having a display, a smart phone, a tablet computer, etc.) for receiving display information associated with computer 2102 via any communication means, including via the Internet and cloud-based networks. In addition to the monitor 2144, a computer typically comprises other peripheral output devices (not shown), such as speakers, printers, etc.

[0292] The computer 2102 can operate in a networked environment using logical connections via wired and/or wireless communications to one or more remote computers, such as a remote computer(s) 2148. The remote computer(s) 2148 can be a workstation, a server computer, a router, a personal computer, portable computer, microprocessor-based entertainment appliance, a peer device or other common network node, and typically comprises

many or all of the elements described relative to the computer 2102, although, for purposes of brevity, only a memory/storage device 2150 is illustrated. The logical connections depicted comprise wired/wireless connectivity to a local area network (LAN) 2152 and/or larger networks, e.g., a wide area network (WAN) 2154. Such LAN and WAN networking environments are commonplace in offices and companies, and facilitate enterprise-wide computer networks, such as intranets, all of which can connect to a global communications network, e.g., the Internet.

[0293] When used in a LAN networking environment, the computer 2102 can be connected to the local network 2152 through a wired and/or wireless communication network interface or adapter 2156. The adapter 2156 can facilitate wired or wireless communication to the LAN 2152, which can also comprise a wireless AP disposed thereon for communicating with the wireless adapter 2156.

[0294] When used in a WAN networking environment, the computer 2102 can comprise a modem 2158 or can be connected to a communications server on the WAN 2154 or has other means for establishing communications over the WAN 2154, such as by way of the Internet. The modem 2158, which can be internal or external and a wired or wireless device, can be connected to the system bus 2108 via the input device interface 2142. In a networked environment, program modules depicted relative to the computer 2102 or portions thereof, can be stored in the remote memory/storage device 2150. It will be appreciated that the network connections shown are example and other means of establishing a communications link between the computers can be used.

[0295] The computer 2102 can be operable to communicate with any wireless devices or entities operatively disposed in wireless communication, e.g., a printer, scanner, desktop and/or portable computer, portable data assistant, communications satellite, any piece of equipment or location associated with a wirelessly detectable tag (e.g., a kiosk, news stand, restroom), and telephone. This can comprise Wireless Fidelity (Wi-Fi) and BLUETOOTH® wireless technologies. Thus, the communication can be a predefined structure as with a conventional network or simply an ad hoc communication between at least two devices.

[0296] Wi-Fi can allow connection to the Internet from a couch at home, a bed in a hotel room or a conference room at work, without wires. Wi-Fi is a wireless technology similar to that used in a cell phone that enables such devices, e.g., computers, to send and receive data indoors and out; anywhere within the range of a base station. Wi-Fi networks use radio technologies called IEEE 802.11 (a, b, g, n, ac, ag etc.) to provide secure, reliable, fast wireless

connectivity. A Wi-Fi network can be used to connect computers to each other, to the Internet, and to wired networks (which can use IEEE 802.3 or Ethernet). Wi-Fi networks operate in the unlicensed 2.4 and 5 GHz radio bands for example or with products that contain both bands (dual band), so the networks can provide real-world performance similar to the basic 10BaseT wired Ethernet networks used in many offices.

[0297] **FIG. 22** presents an example embodiment 2200 of a mobile network platform 2210 that can implement and exploit one or more aspects of the disclosed subject matter described herein. In one or more embodiments, the mobile network platform 2210 can generate and receive signals transmitted and received by base stations (e.g., base station devices 1504, macrocell site 1502, or base stations 1614), central office (e.g., central office 1501 or 1611),or transmission device 101 or 102 associated with the disclosed subject matter. Generally, wireless network platform 2210 can comprise components, e.g., nodes, gateways, interfaces, servers, or disparate platforms, that facilitate both packet-switched (PS) (e.g., internet protocol (IP), frame relay, asynchronous transfer mode (ATM)) and circuit-switched (CS) traffic (e.g., voice and data), as well as control generation for networked wireless telecommunication. As a non-limiting example, wireless network platform 2210 can be included in telecommunications carrier networks, and can be considered carrier-side components as discussed elsewhere herein. Mobile network platform 2210 comprises CS gateway node(s) 2222 which can interface CS traffic received from legacy networks like telephony network(s) 2240 (e.g., public switched telephone network (PSTN), or public land mobile network (PLMN)) or a signaling system #7 (SS7) network 2270. Circuit switched gateway node(s) 2222 can authorize and authenticate traffic (e.g., voice) arising from such networks. Additionally, CS gateway node(s) 2222 can access mobility, or roaming, data generated through SS7 network 2270; for instance, mobility data stored in a visited location register (VLR), which can reside in memory 2230. Moreover, CS gateway node(s) 2222 interfaces CS-based traffic and signaling and PS gateway node(s) 2218. As an example, in a 3GPP UMTS network, CS gateway node(s) 2222 can be realized at least in part in gateway GPRS support node(s) (GGSN). It should be appreciated that functionality and specific operation of CS gateway node(s) 2222, PS gateway node(s) 2218, and serving node(s) 2216, is provided and dictated by radio technology(ies) utilized by mobile network platform 2210 for telecommunication.

[0298] In addition to receiving and processing CS-switched traffic and signaling, PS gateway node(s) 2218 can authorize and authenticate PS-based data sessions with served

mobile devices. Data sessions can comprise traffic, or content(s), exchanged with networks external to the wireless network platform 2210, like wide area network(s) (WANs) 2250, enterprise network(s) 2270, and service network(s) 2280, which can be embodied in local area network(s) (LANs), can also be interfaced with mobile network platform 2210 through PS gateway node(s) 2218. It is to be noted that WANs 2250 and enterprise network(s) 2260 can embody, at least in part, a service network(s) like IP multimedia subsystem (IMS). Based on radio technology layer(s) available in technology resource(s) 2217, packet-switched gateway node(s) 2218 can generate packet data protocol contexts when a data session is established; other data structures that facilitate routing of packetized data also can be generated. To that end, in an aspect, PS gateway node(s) 2218 can comprise a tunnel interface (e.g., tunnel termination gateway (TTG) in 3GPP UMTS network(s) (not shown)) which can facilitate packetized communication with disparate wireless network(s), such as Wi-Fi networks.

[0299] In embodiment 2200, wireless network platform 2210 also comprises serving node(s) 2216 that, based upon available radio technology layer(s) within technology resource(s) 2217, convey the various packetized flows of data streams received through PS gateway node(s) 2218. It is to be noted that for technology resource(s) 2217 that rely primarily on CS communication, server node(s) can deliver traffic without reliance on PS gateway node(s) 2218; for example, server node(s) can embody at least in part a mobile switching center. As an example, in a 3GPP UMTS network, serving node(s) 2216 can be embodied in serving GPRS support node(s) (SGSN).

[0300] For radio technologies that exploit packetized communication, server(s) 2214 in wireless network platform 2210 can execute numerous applications that can generate multiple disparate packetized data streams or flows, and manage (e.g., schedule, queue, format …) such flows. Such application(s) can comprise add-on features to standard services (for example, provisioning, billing, customer support …) provided by wireless network platform 2210. Data streams (e.g., content(s) that are part of a voice call or data session) can be conveyed to PS gateway node(s) 2218 for authorization/authentication and initiation of a data session, and to serving node(s) 2216 for communication thereafter. In addition to application server, server(s) 2214 can comprise utility server(s), a utility server can comprise a provisioning server, an operations and maintenance server, a security server that can implement at least in part a certificate authority and firewalls as well as other security mechanisms, and the like. In an aspect, security server(s) secure communication served through wireless network platform 2210 to ensure network's operation and data integrity in addition to authorization and

authentication procedures that CS gateway node(s) 2222 and PS gateway node(s) 2218 can enact. Moreover, provisioning server(s) can provision services from external network(s) like networks operated by a disparate service provider; for instance, WAN 2250 or Global Positioning System (GPS) network(s) (not shown). Provisioning server(s) can also provision coverage through networks associated to wireless network platform 2210 (e.g., deployed and operated by the same service provider), such as the distributed antennas networks shown in FIG. 1(s) that enhance wireless service coverage by providing more network coverage. Repeater devices such as those shown in FIGs 7, 8, and 9 also improve network coverage in order to enhance subscriber service experience by way of UE 2275.

[0301] It is to be noted that server(s) 2214 can comprise one or more processors configured to confer at least in part the functionality of macro network platform 2210. To that end, the one or more processor can execute code instructions stored in memory 2230, for example. It is should be appreciated that server(s) 2214 can comprise a content manager 2215, which operates in substantially the same manner as described hereinbefore.

[0302] In example embodiment 2200, memory 2230 can store information related to operation of wireless network platform 2210. Other operational information can comprise provisioning information of mobile devices served through wireless platform network 2210, subscriber databases; application intelligence, pricing schemes, e.g., promotional rates, flat-rate programs, couponing campaigns; technical specification(s) consistent with telecommunication protocols for operation of disparate radio, or wireless, technology layers; and so forth. Memory 2230 can also store information from at least one of telephony network(s) 2240, WAN 2250, enterprise network(s) 2270, or SS7 network 2260. In an aspect, memory 2230 can be, for example, accessed as part of a data store component or as a remotely connected memory store.

[0303] In order to provide a context for the various aspects of the disclosed subject matter, **FIG. 22**, and the following discussion, are intended to provide a brief, general description of a suitable environment in which the various aspects of the disclosed subject matter can be implemented. While the subject matter has been described above in the general context of computer-executable instructions of a computer program that runs on a computer and/or computers, those skilled in the art will recognize that the disclosed subject matter also can be implemented in combination with other program modules. Generally, program modules comprise routines, programs, components, data structures, *etc.* that perform particular tasks and/or implement particular abstract data types.

[0304] **FIG. 23** depicts an illustrative embodiment of a communication device 2300. The communication device 2300 can serve as an illustrative embodiment of devices such as mobile devices and in-building devices referred to by the subject disclosure (e.g., in **FIGs.15, 16A** and **16B**).

[0305] The communication device 2300 can comprise a wireline and/or wireless transceiver 2302 (herein transceiver 2302), a user interface (UI) 2304, a power supply 2314, a location receiver 2316, a motion sensor 2318, an orientation sensor 2320, and a controller 2306 for managing operations thereof. The transceiver 2302 can support short-range or long-range wireless access technologies such as Bluetooth®, ZigBee®, WiFi, DECT, or cellular communication technologies, just to mention a few (Bluetooth® and ZigBee® are trademarks registered by the Bluetooth® Special Interest Group and the ZigBee® Alliance, respectively). Cellular technologies can include, for example, CDMA-1X, UMTS/HSDPA, GSM/GPRS, TDMA/EDGE, EV/DO, WiMAX, SDR, LTE, as well as other next generation wireless communication technologies as they arise. The transceiver 2302 can also be adapted to support circuit-switched wireline access technologies (such as PSTN), packet-switched wireline access technologies (such as TCP/IP, VoIP, etc.), and combinations thereof.

[0306] The UI 2304 can include a depressible or touch-sensitive keypad 2308 with a navigation mechanism such as a roller ball, a joystick, a mouse, or a navigation disk for manipulating operations of the communication device 2300. The keypad 2308 can be an integral part of a housing assembly of the communication device 2300 or an independent device operably coupled thereto by a tethered wireline interface (such as a USB cable) or a wireless interface supporting for example Bluetooth®. The keypad 2308 can represent a numeric keypad commonly used by phones, and/or a QWERTY keypad with alphanumeric keys. The UI 2304 can further include a display 2310 such as monochrome or color LCD (Liquid Crystal Display), OLED (Organic Light Emitting Diode) or other suitable display technology for conveying images to an end user of the communication device 2300. In an embodiment where the display 2310 is touch-sensitive, a portion or all of the keypad 2308 can be presented by way of the display 2310 with navigation features.

[0307] The display 2310 can use touch screen technology to also serve as a user interface for detecting user input. As a touch screen display, the communication device 2300 can be adapted to present a user interface having graphical user interface (GUI) elements that can be selected by a user with a touch of a finger. The touch screen display 2310 can be equipped with capacitive, resistive or other forms of sensing technology to detect how much surface area

of a user's finger has been placed on a portion of the touch screen display. This sensing information can be used to control the manipulation of the GUI elements or other functions of the user interface. The display 2310 can be an integral part of the housing assembly of the communication device 2300 or an independent device communicatively coupled thereto by a tethered wireline interface (such as a cable) or a wireless interface.

[0308] The UI 2304 can also include an audio system 2312 that utilizes audio technology for conveying low volume audio (such as audio heard in proximity of a human ear) and high volume audio (such as speakerphone for hands free operation). The audio system 2312 can further include a microphone for receiving audible signals of an end user. The audio system 2312 can also be used for voice recognition applications. The UI 2304 can further include an image sensor 2313 such as a charged coupled device (CCD) camera for capturing still or moving images.

[0309] The power supply 2314 can utilize common power management technologies such as replaceable and rechargeable batteries, supply regulation technologies, and/or charging system technologies for supplying energy to the components of the communication device 2300 to facilitate long-range or short-range portable communications. Alternatively, or in combination, the charging system can utilize external power sources such as DC power supplied over a physical interface such as a USB port or other suitable tethering technologies.

[0310] The location receiver 2316 can utilize location technology such as a global positioning system (GPS) receiver capable of assisted GPS for identifying a location of the communication device 2300 based on signals generated by a constellation of GPS satellites, which can be used for facilitating location services such as navigation. The motion sensor 2318 can utilize motion sensing technology such as an accelerometer, a gyroscope, or other suitable motion sensing technology to detect motion of the communication device 2300 in three-dimensional space. The orientation sensor 2320 can utilize orientation sensing technology such as a magnetometer to detect the orientation of the communication device 2300 (north, south, west, and east, as well as combined orientations in degrees, minutes, or other suitable orientation metrics).

[0311] The communication device 2300 can use the transceiver 2302 to also determine a proximity to a cellular, WiFi, Bluetooth®, or other wireless access points by sensing techniques such as utilizing a received signal strength indicator (RSSI) and/or signal time of arrival (TOA) or time of flight (TOF) measurements. The controller 2306 can utilize computing technologies such as a microprocessor, a digital signal processor (DSP), programmable gate arrays,

application specific integrated circuits, and/or a video processor with associated storage memory such as Flash, ROM, RAM, SRAM, DRAM or other storage technologies for executing computer instructions, controlling, and processing data supplied by the aforementioned components of the communication device 2300.

[0312] Other components not shown in **FIG. 23** can be used in one or more embodiments of the subject disclosure. For instance, the communication device 2300 can include a slot for adding or removing an identity module such as a Subscriber Identity Module (SIM) card or Universal Integrated Circuit Card (UICC). SIM or UICC cards can be used for identifying subscriber services, executing programs, storing subscriber data, and so on.

[0313] In the subject specification, terms such as "store," "storage," "data store," data storage," "database," and substantially any other information storage component relevant to operation and functionality of a component, refer to "memory components," or entities embodied in a "memory" or components comprising the memory. It will be appreciated that the memory components described herein can be either volatile memory or nonvolatile memory, or can comprise both volatile and nonvolatile memory, by way of illustration, and not limitation, volatile memory, non-volatile memory, disk storage, and memory storage. Further, nonvolatile memory can be included in read only memory (ROM), programmable ROM (PROM), electrically programmable ROM (EPROM), electrically erasable ROM (EEPROM), or flash memory. Volatile memory can comprise random access memory (RAM), which acts as external cache memory. By way of illustration and not limitation, RAM is available in many forms such as synchronous RAM (SRAM), dynamic RAM (DRAM), synchronous DRAM (SDRAM), double data rate SDRAM (DDR SDRAM), enhanced SDRAM (ESDRAM), Synchlink DRAM (SLDRAM), and direct Rambus RAM (DRRAM). Additionally, the disclosed memory components of systems or methods herein are intended to comprise, without being limited to comprising, these and any other suitable types of memory.

[0314] Moreover, it will be noted that the disclosed subject matter can be practiced with other computer system configurations, comprising single-processor or multiprocessor computer systems, mini-computing devices, mainframe computers, as well as personal computers, hand-held computing devices (*e.g.*, PDA, phone, smartphone, watch, tablet computers, netbook computers, etc.), microprocessor-based or programmable consumer or industrial electronics, and the like. The illustrated aspects can also be practiced in distributed computing environments where tasks are performed by remote processing devices that are linked through a communications network; however, some if not all aspects of the subject

disclosure can be practiced on stand-alone computers. In a distributed computing environment, program modules can be located in both local and remote memory storage devices.

[0315] Some of the embodiments described herein can also employ artificial intelligence (AI) to facilitate automating one or more features described herein. For example, artificial intelligence can be used in optional training controller 230 evaluate and select candidate frequencies, modulation schemes, MIMO modes, and/or guided wave modes in order to maximize transfer efficiency. The embodiments (e.g., in connection with automatically identifying acquired cell sites that provide a maximum value/benefit after addition to an existing communication network) can employ various AI-based schemes for carrying out various embodiments thereof. Moreover, the classifier can be employed to determine a ranking or priority of the each cell site of the acquired network. A classifier is a function that maps an input attribute vector, x = (x1, x2, x3, x4, ..., xn), to a confidence that the input belongs to a class, that is, f(x) = confidence (class). Such classification can employ a probabilistic and/or statistical-based analysis (e.g., factoring into the analysis utilities and costs) to prognose or infer an action that a user desires to be automatically performed. A support vector machine (SVM) is an example of a classifier that can be employed. The SVM operates by finding a hypersurface in the space of possible inputs, which the hypersurface attempts to split the triggering criteria from the non-triggering events. Intuitively, this makes the classification correct for testing data that is near, but not identical to training data. Other directed and undirected model classification approaches comprise, e.g., naïve Bayes, Bayesian networks, decision trees, neural networks, fuzzy logic models, and probabilistic classification models providing different patterns of independence can be employed. Classification as used herein also is inclusive of statistical regression that is utilized to develop models of priority.

[0316] As will be readily appreciated, one or more of the embodiments can employ classifiers that are explicitly trained (e.g., via a generic training data) as well as implicitly trained (e.g., via observing UE behavior, operator preferences, historical information, receiving extrinsic information). For example, SVMs can be configured via a learning or training phase within a classifier constructor and feature selection module. Thus, the classifier(s) can be used to automatically learn and perform a number of functions, including but not limited to determining according to a predetermined criteria which of the acquired cell sites will benefit a maximum number of subscribers and/or which of the acquired cell sites will add minimum value to the existing communication network coverage, etc.

[0317] As used in some contexts in this application, in some embodiments, the terms

"component," "system" and the like are intended to refer to, or comprise, a computer-related entity or an entity related to an operational apparatus with one or more specific functionalities, wherein the entity can be either hardware, a combination of hardware and software, software, or software in execution. As an example, a component may be, but is not limited to being, a process running on a processor, a processor, an object, an executable, a thread of execution, computer-executable instructions, a program, and/or a computer. By way of illustration and not limitation, both an application running on a server and the server can be a component. One or more components may reside within a process and/or thread of execution and a component may be localized on one computer and/or distributed between two or more computers. In addition, these components can execute from various computer readable media having various data structures stored thereon. The components may communicate via local and/or remote processes such as in accordance with a signal having one or more data packets (e.g., data from one component interacting with another component in a local system, distributed system, and/or across a network such as the Internet with other systems via the signal). As another example, a component can be an apparatus with specific functionality provided by mechanical parts operated by electric or electronic circuitry, which is operated by a software or firmware application executed by a processor, wherein the processor can be internal or external to the apparatus and executes at least a part of the software or firmware application. As yet another example, a component can be an apparatus that provides specific functionality through electronic components without mechanical parts, the electronic components can comprise a processor therein to execute software or firmware that confers at least in part the functionality of the electronic components. While various components have been illustrated as separate components, it will be appreciated that multiple components can be implemented as a single component, or a single component can be implemented as multiple components, without departing from example embodiments.

[0318] Further, the various embodiments can be implemented as a method, apparatus or article of manufacture using standard programming and/or engineering techniques to produce software, firmware, hardware or any combination thereof to control a computer to implement the disclosed subject matter. The term "article of manufacture" as used herein is intended to encompass a computer program accessible from any computer-readable device or computer-readable storage/communications media. For example, computer readable storage media can include, but are not limited to, magnetic storage devices (e.g., hard disk, floppy disk, magnetic strips), optical disks (e.g., compact disk (CD), digital versatile disk (DVD)), smart cards, and

flash memory devices (e.g., card, stick, key drive). Of course, those skilled in the art will recognize many modifications can be made to this configuration without departing from the scope or spirit of the various embodiments.

[0319] In addition, the words "example" and "exemplary" are used herein to mean serving as an instance or illustration. Any embodiment or design described herein as "example" or "exemplary" is not necessarily to be construed as preferred or advantageous over other embodiments or designs. Rather, use of the word example or exemplary is intended to present concepts in a concrete fashion. As used in this application, the term "or" is intended to mean an inclusive "or" rather than an exclusive "or". That is, unless specified otherwise or clear from context, "X employs A or B" is intended to mean any of the natural inclusive permutations. That is, if X employs A; X employs B; or X employs both A and B, then "X employs A or B" is satisfied under any of the foregoing instances. In addition, the articles "a" and "an" as used in this application and the appended claims should generally be construed to mean "one or more" unless specified otherwise or clear from context to be directed to a singular form.

[0320] Moreover, terms such as "user equipment," "mobile station," "mobile," subscriber station," "access terminal," "terminal," "handset," "mobile device" (and/or terms representing similar terminology) can refer to a wireless device utilized by a subscriber or user of a wireless communication service to receive or convey data, control, voice, video, sound, gaming or substantially any data-stream or signaling-stream. The foregoing terms are utilized interchangeably herein and with reference to the related drawings.

[0321] Furthermore, the terms "user," "subscriber," "customer," "consumer" and the like are employed interchangeably throughout, unless context warrants particular distinctions among the terms. It should be appreciated that such terms can refer to human entities or automated components supported through artificial intelligence (e.g., a capacity to make inference based, at least, on complex mathematical formalisms), which can provide simulated vision, sound recognition and so forth.

[0322] As employed herein, the term "processor" can refer to substantially any computing processing unit or device comprising, but not limited to comprising, single-core processors; single-processors with software multithread execution capability; multi-core processors; multi-core processors with software multithread execution capability; multi-core processors with hardware multithread technology; parallel platforms; and parallel platforms with distributed shared memory. Additionally, a processor can refer to an integrated circuit, an application

specific integrated circuit (ASIC), a digital signal processor (DSP), a field programmable gate array (FPGA), a programmable logic controller (PLC), a complex programmable logic device (CPLD), a discrete gate or transistor logic, discrete hardware components or any combination thereof designed to perform the functions described herein. Processors can exploit nano-scale architectures such as, but not limited to, molecular and quantum-dot based transistors, switches and gates, in order to optimize space usage or enhance performance of user equipment. A processor can also be implemented as a combination of computing processing units.

[0323] As used herein, terms such as "data storage," data storage," "database," and substantially any other information storage component relevant to operation and functionality of a component, refer to "memory components," or entities embodied in a "memory" or components comprising the memory. It will be appreciated that the memory components or computer-readable storage media, described herein can be either volatile memory or nonvolatile memory or can include both volatile and nonvolatile memory.

[0324] What has been described above includes mere examples of various embodiments. It is, of course, not possible to describe every conceivable combination of components or methodologies for purposes of describing these examples, but one of ordinary skill in the art can recognize that many further combinations and permutations of the present embodiments are possible. Accordingly, the embodiments disclosed and/or claimed herein are intended to embrace all such alterations, modifications and variations that fall within the spirit and scope of the appended claims. Furthermore, to the extent that the term "includes" is used in either the detailed description or the claims, such term is intended to be inclusive in a manner similar to the term "comprising" as "comprising" is interpreted when employed as a transitional word in a claim.

[0325] In addition, a flow diagram may include a "start" and/or "continue" indication. The "start" and "continue" indications reflect that the steps presented can optionally be incorporated in or otherwise used in conjunction with other routines. In this context, "start" indicates the beginning of the first step presented and may be preceded by other activities not specifically shown. Further, the "continue" indication reflects that the steps presented may be performed multiple times and/or may be succeeded by other activities not specifically shown. Further, while a flow diagram indicates a particular ordering of steps, other orderings are likewise possible provided that the principles of causality are maintained.

[0326] As may also be used herein, the term(s) "operably coupled to", "coupled to", and/or "coupling" includes direct coupling between items and/or indirect coupling between items via

one or more intervening items. Such items and intervening items include, but are not limited to, junctions, communication paths, components, circuit elements, circuits, functional blocks, and/or devices. As an example of indirect coupling, a signal conveyed from a first item to a second item may be modified by one or more intervening items by modifying the form, nature or format of information in a signal, while one or more elements of the information in the signal are nevertheless conveyed in a manner than can be recognized by the second item. In a further example of indirect coupling, an action in a first item can cause a reaction on the second item, as a result of actions and/or reactions in one or more intervening items.

[0327] Although specific embodiments have been illustrated and described herein, it should be appreciated that any arrangement which achieves the same or similar purpose may be substituted for the embodiments described or shown by the subject disclosure. The subject disclosure is intended to cover any and all adaptations or variations of various embodiments. Combinations of the above embodiments, and other embodiments not specifically described herein, can be used in the subject disclosure. For instance, one or more features from one or more embodiments can be combined with one or more features of one or more other embodiments. In one or more embodiments, features that are positively recited can also be negatively recited and excluded from the embodiment with or without replacement by another structural and/or functional feature. The steps or functions described with respect to the embodiments of the subject disclosure can be performed in any order. The steps or functions described with respect to the embodiments of the subject disclosure can be performed alone or in combination with other steps or functions of the subject disclosure, as well as from other embodiments or from other steps that have not been described in the subject disclosure. Further, more than or less than all of the features described with respect to an embodiment can also be utilized.

CLAIMS

What is claimed is:

1. A launcher comprising:

a hollow metal waveguide that guides a first electromagnetic wave conveying data from a transmitting device; and

a dielectric stub coupler configured to receive the first electromagnetic wave from the hollow metal waveguide via a portion of the dielectric stub coupler that fits within an end of the hollow metal waveguide, wherein the dielectric stub coupler is conductorless and comprises a plastic material, and forms, in response to the first electromagnetic wave from the hollow metal waveguide, a second electromagnetic wave that propagates along the dielectric stub coupler adjacent to a transmission medium, and wherein the dielectric stub coupler has a length extending from the end of the hollow metal waveguide, wherein the length supports a cancellation of at least one cancelled wave mode when coupling the second electromagnetic wave to the transmission medium.

2. The launcher of claim 1, wherein the length corresponds to an integer number of wavelengths of the at least one cancelled wave mode.

3. The launcher of claim 1, wherein the dielectric stub coupler is separated from the transmission medium by a gap that further supports the cancellation of the at least one cancelled wave mode when coupling the second electromagnetic wave to the transmission medium.

4. The launcher of claim 1, wherein the dielectric stub coupler is aligned parallel to a longitudinal axis of the transmission medium.

5. The launcher of claim 1, further comprising a reflective plate aligned parallel to the dielectric stub coupler, wherein the dielectric stub coupler is between the reflective plate and the transmission medium and wherein the reflective plate further supports the cancellation of the at least one cancelled wave mode when coupling the second electromagnetic wave to the transmission medium.

6. The launcher of claim 1, wherein the at least one cancelled wave mode is a fundamental mode.

7. The launcher of claim 1, wherein the dielectric stub coupler includes a tapered, rounded or beveled end that terminates adjacent to the transmission medium.

8. The launcher of claim 7, wherein the dielectric stub coupler includes a receiving end, opposite from the tapered, rounded or beveled end, that is within the hollow metal waveguide.

9. A coupling module comprising:

a waveguide that guides a first electromagnetic wave conveying data from a transmitting device; and

a dielectric coupler that receives the first electromagnetic wave from the waveguide to form a second electromagnetic wave, and that guides the second electromagnetic wave along the dielectric coupler adjacent to a transmission medium, and wherein the dielectric coupler has a first length extending from an end of the waveguide, wherein the first length supports a cancellation of at least one cancelled wave mode from a coupling of the second electromagnetic wave to the transmission medium.

10. The coupling module of claim 9, wherein the first length corresponds to an integer number of wavelengths of the at least one cancelled wave mode.

11. The coupling module of claim 9, wherein the dielectric coupler is separated from the transmission medium by a gap that further supports the cancellation of the at least one cancelled wave mode when coupling the second electromagnetic wave to the transmission medium.

12. The coupling module of claim 9, wherein the dielectric coupler is aligned parallel to a longitudinal axis of the transmission medium.

13. The coupling module of claim 9, further comprising a reflective plate aligned parallel to the dielectric coupler, wherein the dielectric coupler is between the reflective plate and the transmission medium and wherein the reflective plate further supports the cancellation of the

at least one cancelled wave mode when coupling the second electromagnetic wave to the transmission medium.

14. The coupling module of claim 9, wherein the portion of the dielectric stub coupler that fits within the end of the hollow metal waveguide has a second length extending within the end of the hollow metal waveguide that mitigates a return loss in receiving the first electromagnetic wave.

15. A method comprising:

guiding, a hollow metal waveguide, a first electromagnetic wave conveying data from a transmitting device; and

receiving, via a dielectric stub coupler, the first electromagnetic wave from the hollow metal waveguide via a portion of the dielectric stub coupler that fits within and end of the hollow metal waveguide, wherein the dielectric stub coupler is conductorless and comprises a plastic material; and

forming, in response to the first electromagnetic wave from the hollow metal waveguide, a second electromagnetic wave that propagates along the dielectric stub coupler adjacent to a transmission medium, and wherein the dielectric stub coupler has a length extending from the end of the hollow metal waveguide, wherein the length supports a cancellation of at least one cancelled wave mode when coupling the second electromagnetic wave to the transmission medium.

AMENDED CLAIMS
received by the International Bureau on 26 January 2018 (26.01.2018)

CLAIMS
What is claimed is:

1. A launcher comprising:

a hollow metal waveguide that guides a first electromagnetic wave conveying data from a transmitting device; and

a dielectric stub coupler configured to receive the first electromagnetic wave from the hollow metal waveguide via a portion of the dielectric stub coupler that fits within an end of the hollow metal waveguide, wherein the dielectric stub coupler is conductorless and comprises a plastic material, and forms, in response to the first electromagnetic wave from the hollow metal waveguide, a second electromagnetic wave that propagates along the dielectric stub coupler adjacent to a transmission medium via a plurality of wave modes including a quasi TEM_{00} wave mode and a TM_{01} wave mode, and wherein the dielectric stub coupler has a length extending from the end of the hollow metal waveguide, wherein the length supports a cancellation of the quasi TEM_{00} wave mode when coupling the second electromagnetic wave to the transmission medium by the length corresponding to an integer number of wavelengths of the quasi TEM_{00} wave mode.

2. The launcher of claim 1, wherein the transmission medium is a power line.

3. The launcher of claim 1, wherein the dielectric stub coupler is separated from the transmission medium by a gap that further supports the cancellation of the the quasi TEM_{00} wave mode when coupling the second electromagnetic wave to the transmission medium.

4. The launcher of claim 1, wherein the dielectric stub coupler is aligned parallel to a longitudinal axis of the transmission medium.

5. The launcher of claim 1, further comprising a reflective plate aligned parallel to the dielectric stub coupler, wherein the dielectric stub coupler is between the reflective plate and the transmission medium and wherein the reflective plate further supports the cancellation of the the quasi TEM_{00} wave mode when coupling the second electromagnetic wave to the transmission medium.

6. The launcher of claim 1, wherein the transmission medium is an insulated medium voltage power line.

7. The launcher of claim 1, wherein the dielectric stub coupler includes a tapered, rounded or beveled end that terminates adjacent to the transmission medium.

8. The launcher of claim 7, wherein the dielectric stub coupler includes a receiving end, opposite from the tapered, rounded or beveled end, that is within the hollow metal waveguide.

9. A coupling module comprising:

a waveguide that guides a first electromagnetic wave conveying data from a transmitting device; and

a dielectric coupler that receives the first electromagnetic wave from the waveguide to form a second electromagnetic wave, and that guides the second electromagnetic wave along the dielectric coupler adjacent to a transmission medium via a plurality of wave modes including a quasi TEM_{00} wave mode and a TM_{01} wave mode, and wherein the dielectric coupler has a first length extending from an end of the waveguide, wherein the first length supports a cancellation of the quasi TEM_{00} wave mode from a coupling of the second electromagnetic wave to the transmission medium by the first length corresponding to an integer number of wavelengths of the quasi TEM_{00} wave mode.

10. The coupling module of claim 9, wherein the transmission medium is a power line.

11. The coupling module of claim 9, wherein the dielectric coupler is separated from the transmission medium by a gap that further supports the cancellation of the the quasi TEM_{00} wave mode when coupling the second electromagnetic wave to the transmission medium.

12. The coupling module of claim 9, wherein the dielectric coupler is aligned parallel to a longitudinal axis of the transmission medium.

13. The coupling module of claim 9, further comprising a reflective plate aligned parallel to the dielectric coupler, wherein the dielectric coupler is between the reflective plate and the transmission medium and wherein the reflective plate further supports the cancellation of the

the quasi TEM_{00} wave mode when coupling the second electromagnetic wave to the transmission medium.

14. The coupling module of claim 9, wherein a portion of the dielectric coupler that fits within the end of the waveguide has a second length extending within the end of the waveguide that mitigates a return loss in receiving the first electromagnetic wave.

15. A method comprising:

guiding, a hollow metal waveguide, a first electromagnetic wave conveying data from a transmitting device; and

receiving, via a dielectric stub coupler, the first electromagnetic wave from the hollow metal waveguide via a portion of the dielectric stub coupler that fits within and end of the hollow metal waveguide, wherein the dielectric stub coupler is conductorless and comprises a plastic material; and

forming, in response to the first electromagnetic wave from the hollow metal waveguide, a second electromagnetic wave that propagates along the dielectric stub coupler adjacent to a transmission medium via a plurality of wave modes including a quasi TEM_{00} wave mode and a TM_{01} wave mode, and wherein the dielectric stub coupler has a length extending from the end of the hollow metal waveguide, wherein the length supports a cancellation of the quasi TEM_{00} wave mode when coupling the second electromagnetic wave to the transmission medium by the length corresponding to an integer number of wavelengths of the quasi TEM_{00} wave mode.

Statement under Article 19(1)

IA Number:
PCT/US2017/052473

International Filing Date:
20 September 2017

Date of submission:
26 January 2018

The claims in the present application are believed to be sufficiently clear, have novelty, an inventive step and industrial applicability, and such an indication is respectfully requested in the issuance of the International Preliminary Report on Patentability. It is respectfully requested that the Examiner call or email the undersigned if clarification is needed on any matter within this Amendment.

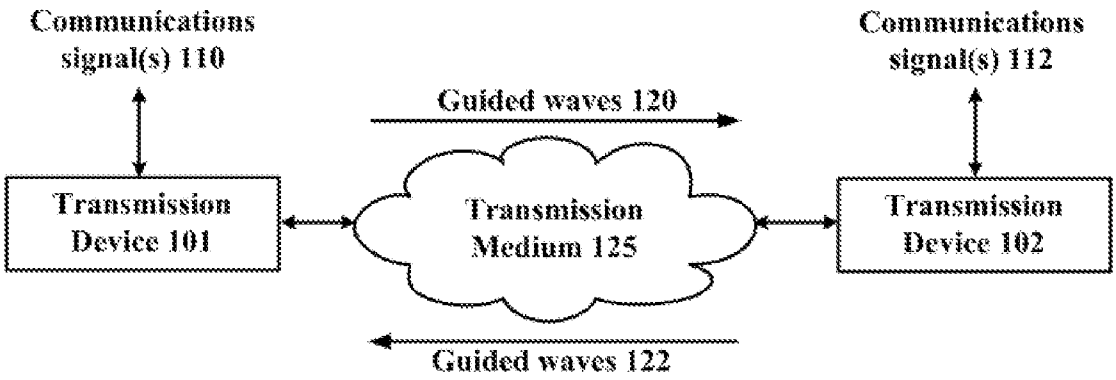

100

FIG. 1

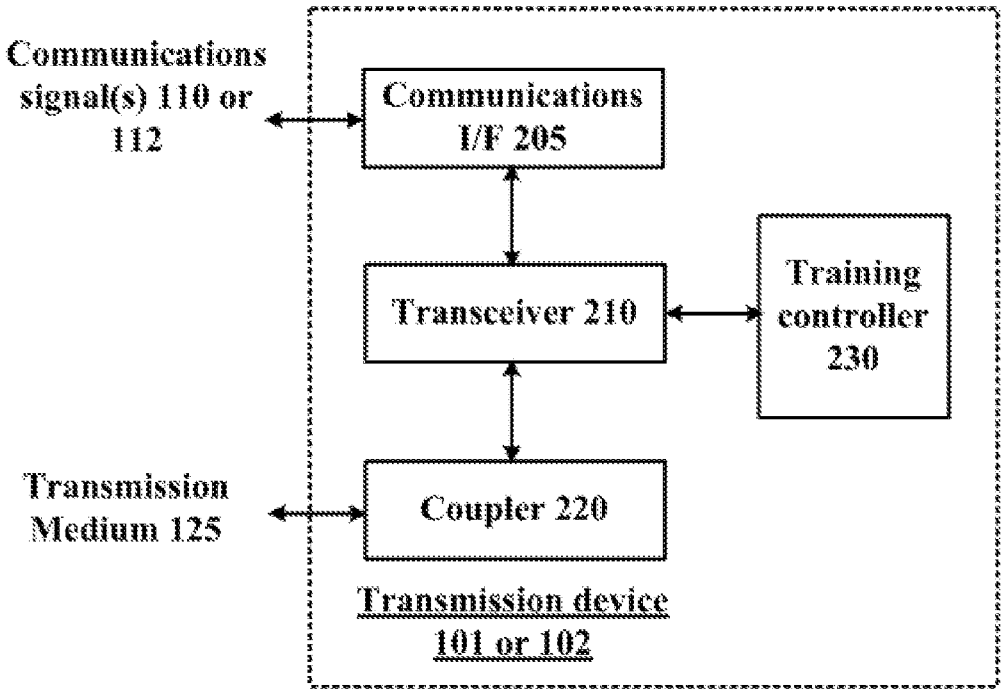

200

FIG. 2

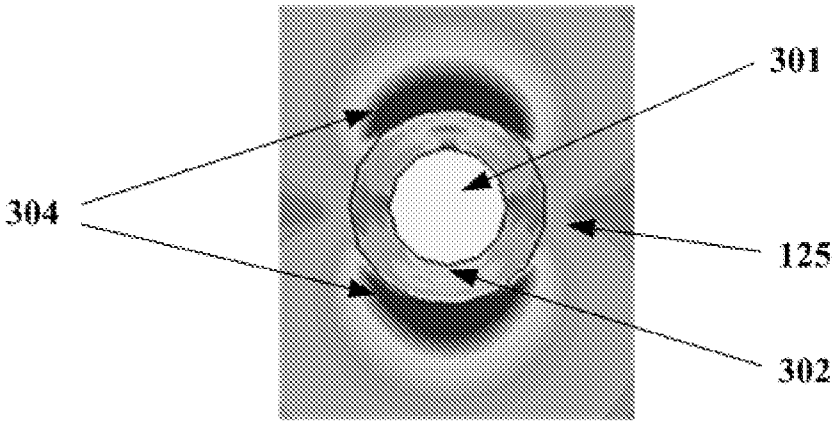

300

FIG. 3

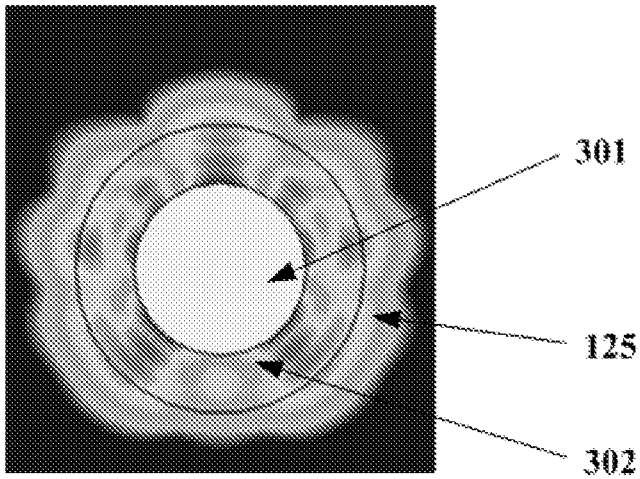

400

FIG. 4

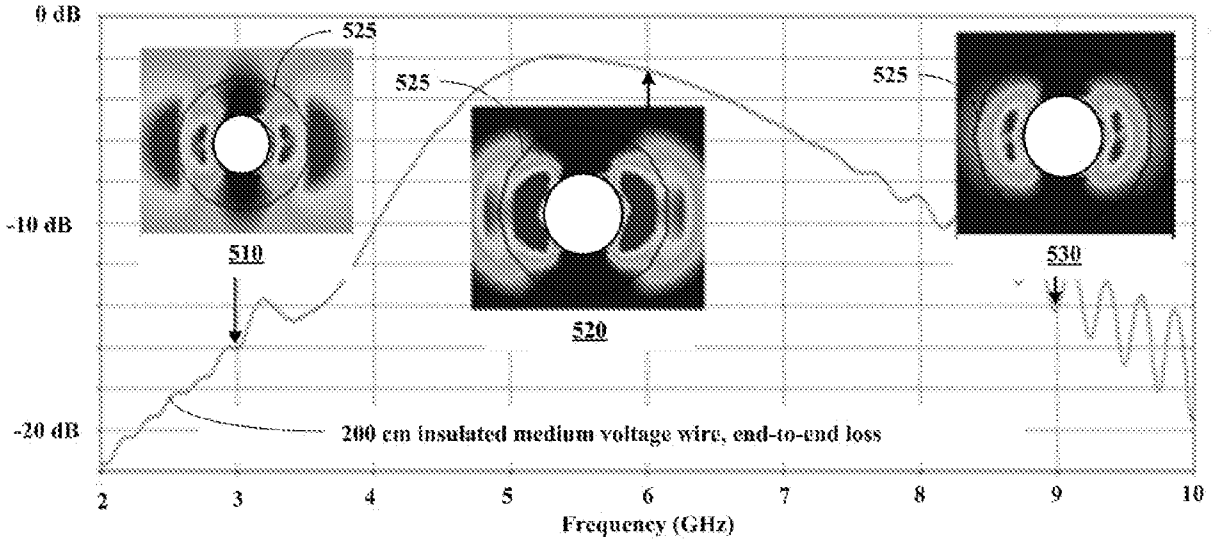

500

FIG. 5A

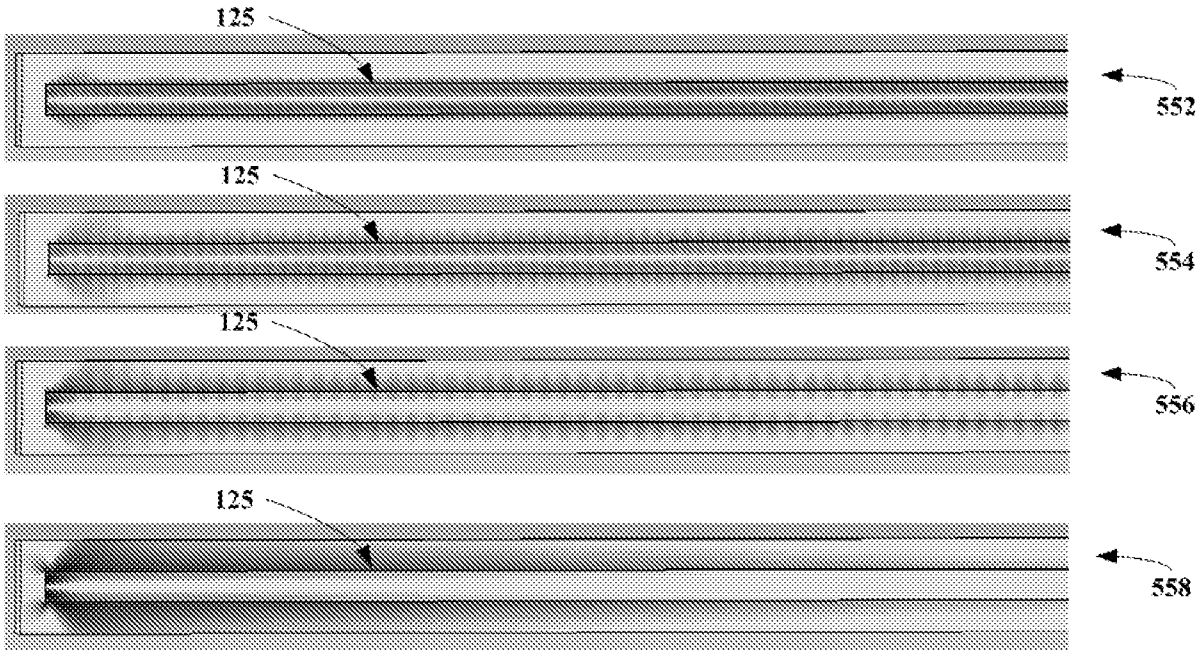

550

FIG. 5B

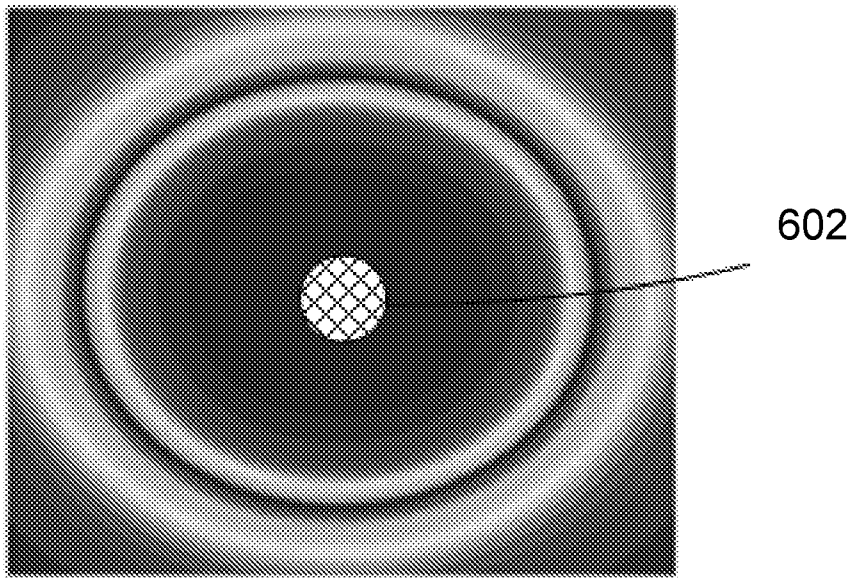

600

FIG. 6

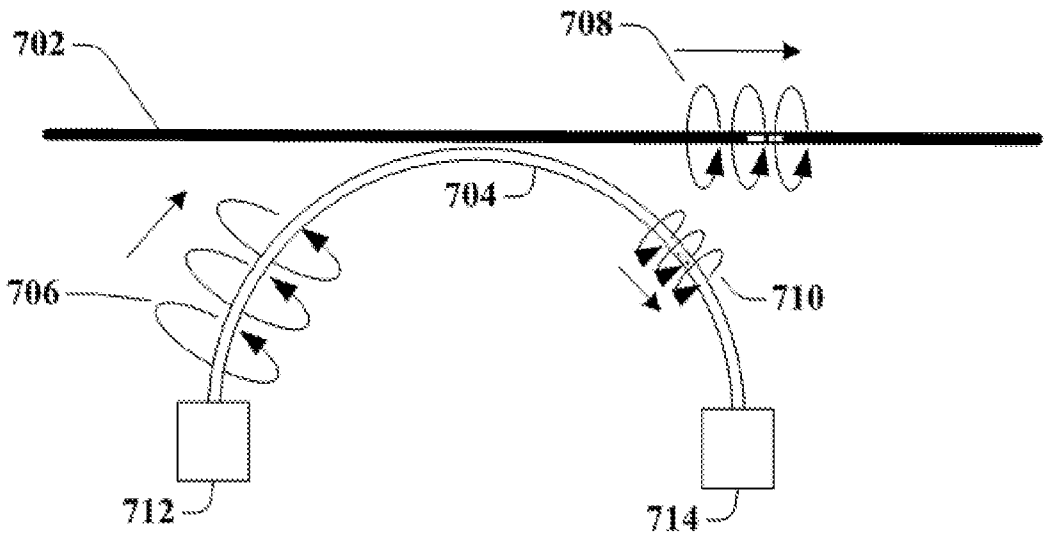

700

FIG. 7

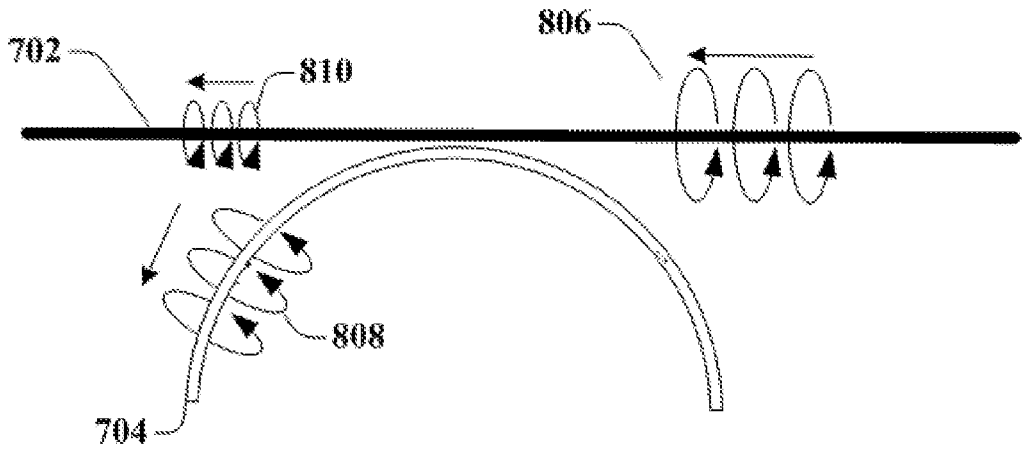

800

FIG. 8

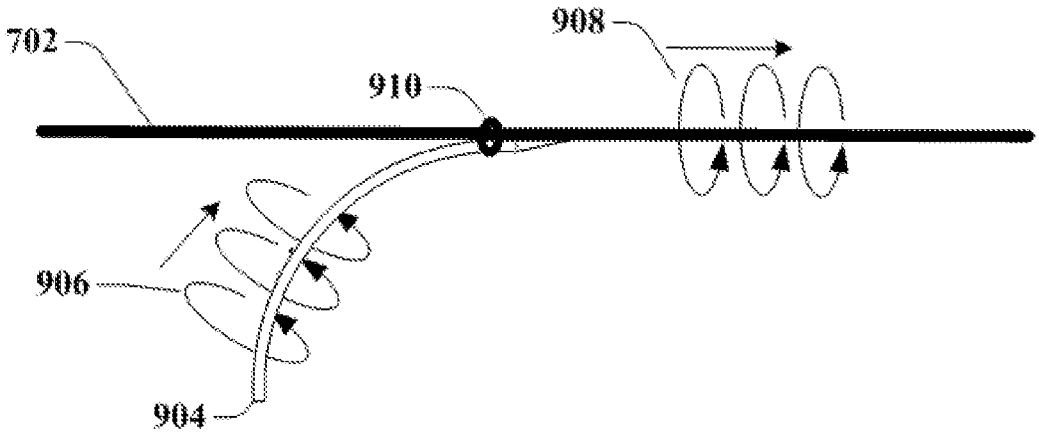

900

FIG. 9A

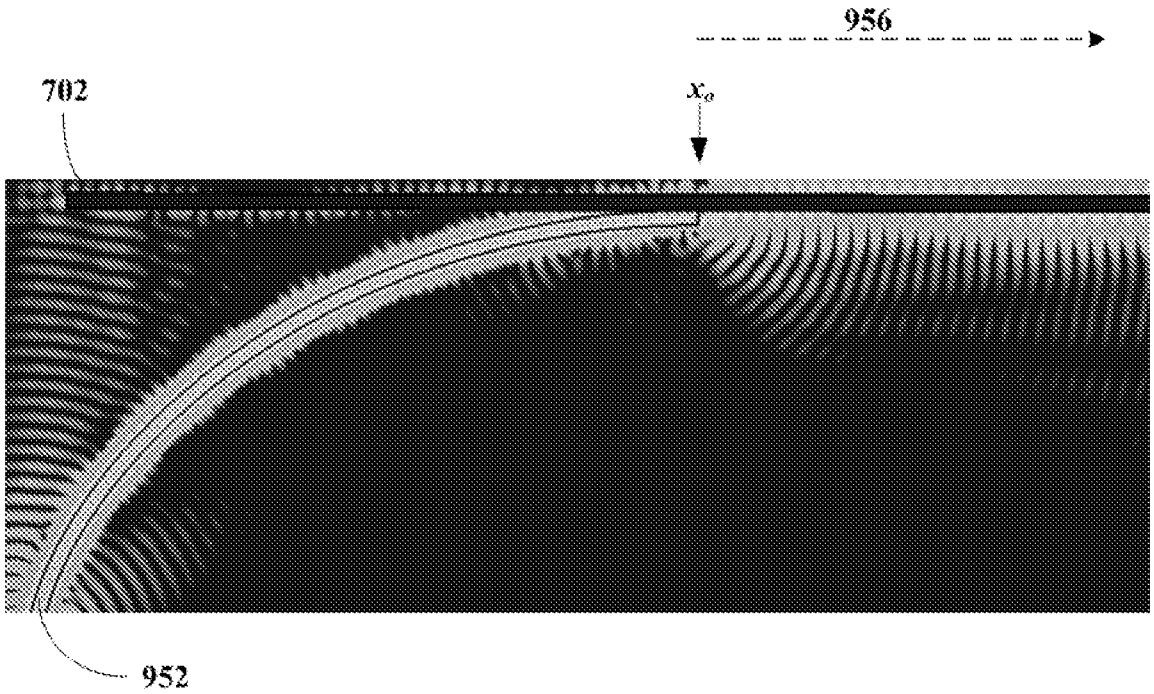

950

FIG. 9B

1000

FIG. 10A

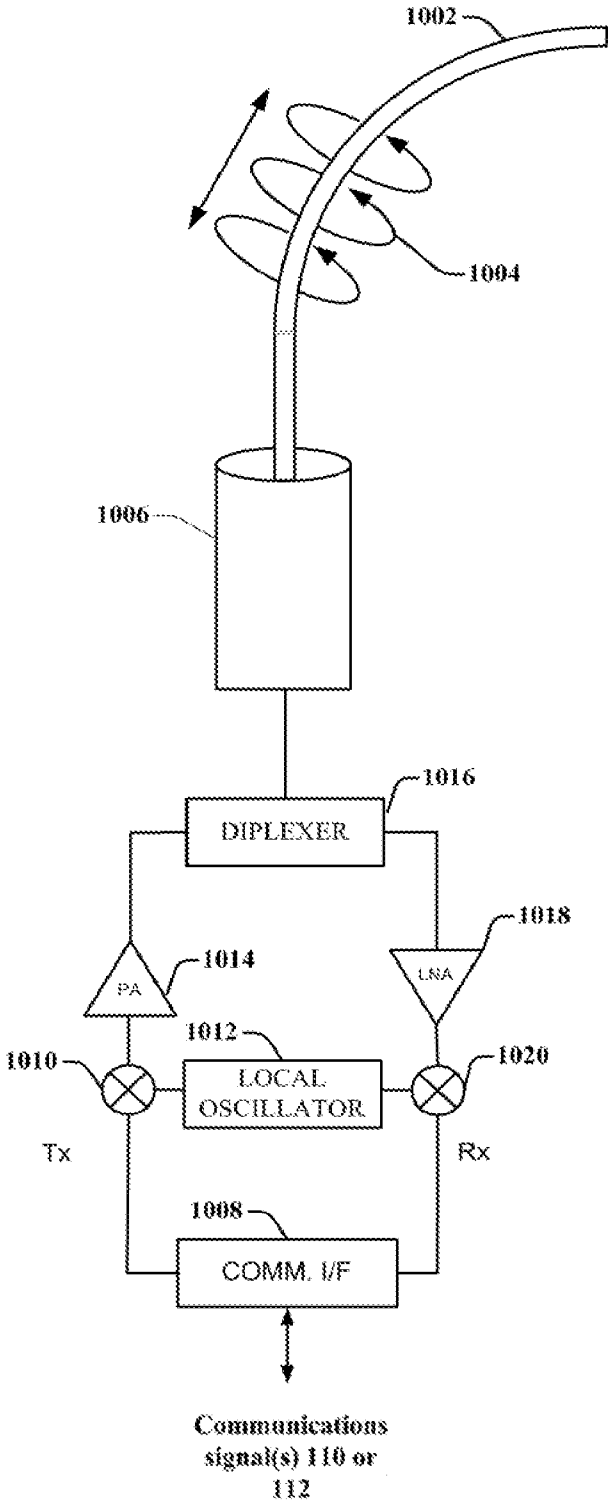
1002
1004
1006
1016
DIPLEXER
1018
1014
PA
LNA
1012
1010
LOCAL OSCILLATOR
1020
Tx
Rx
1008
COMM. I/F
Communications signal(s) 110 or 112

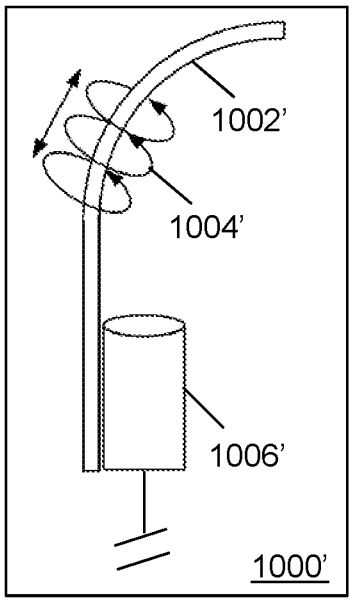

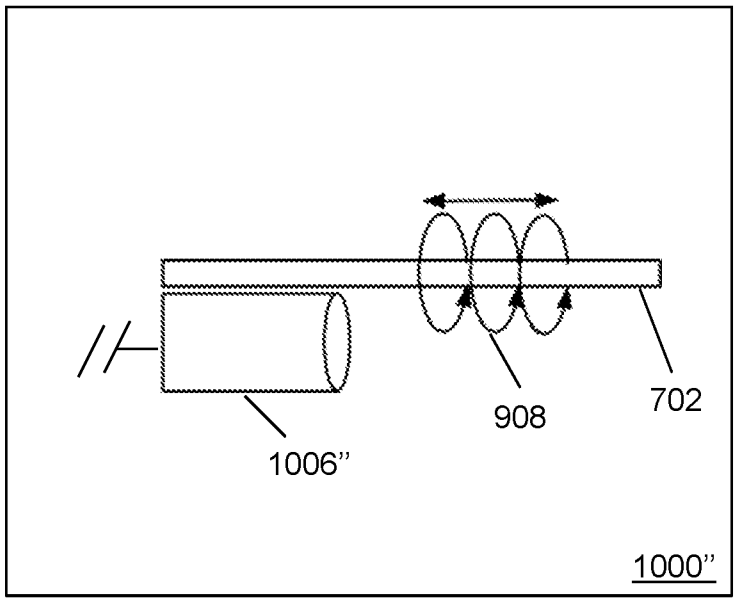

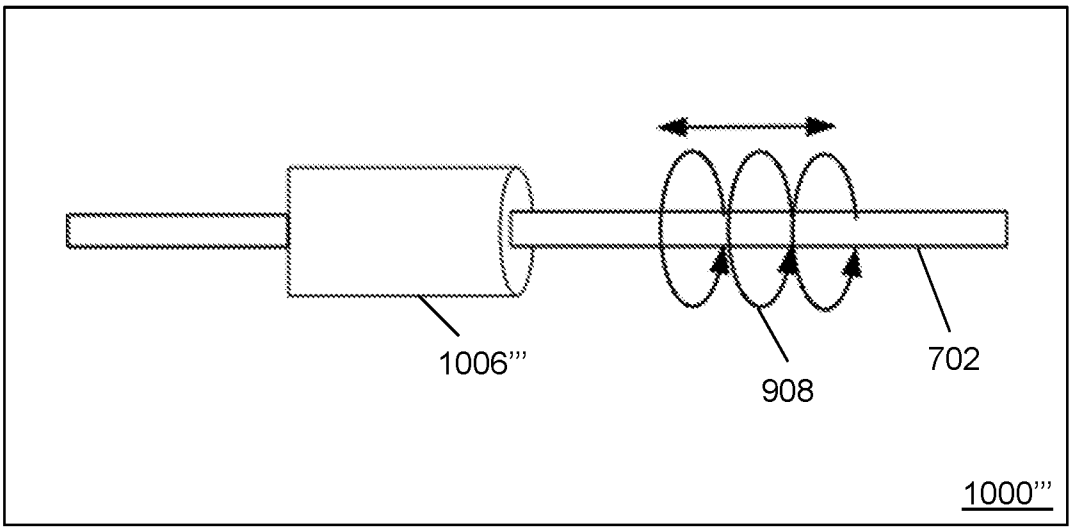

FIG. 10B

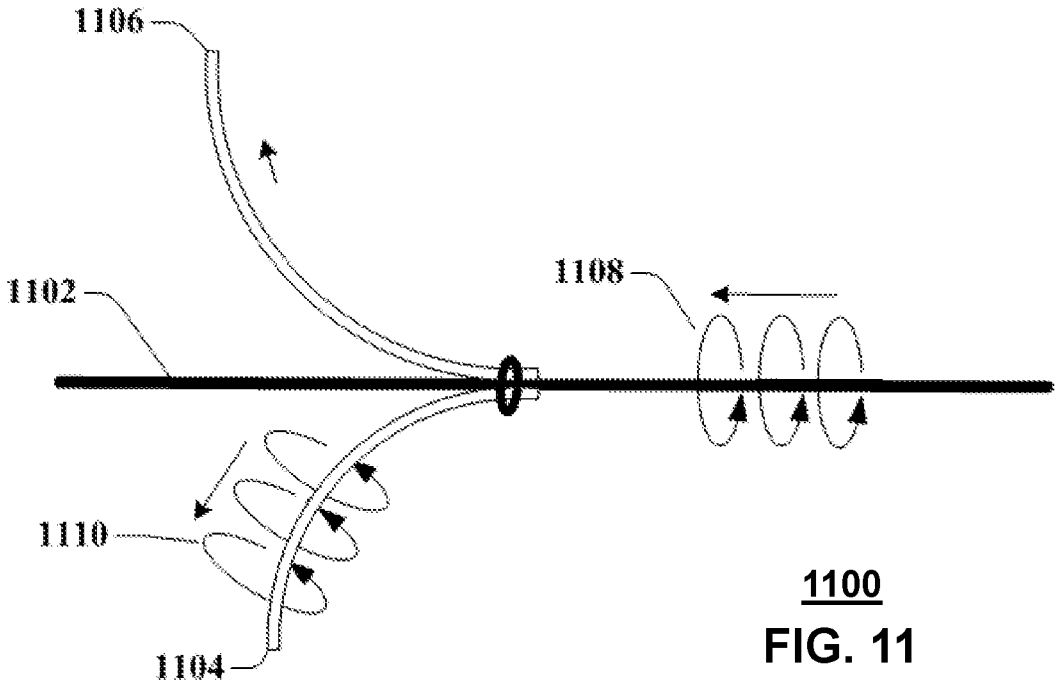

1100

FIG. 11

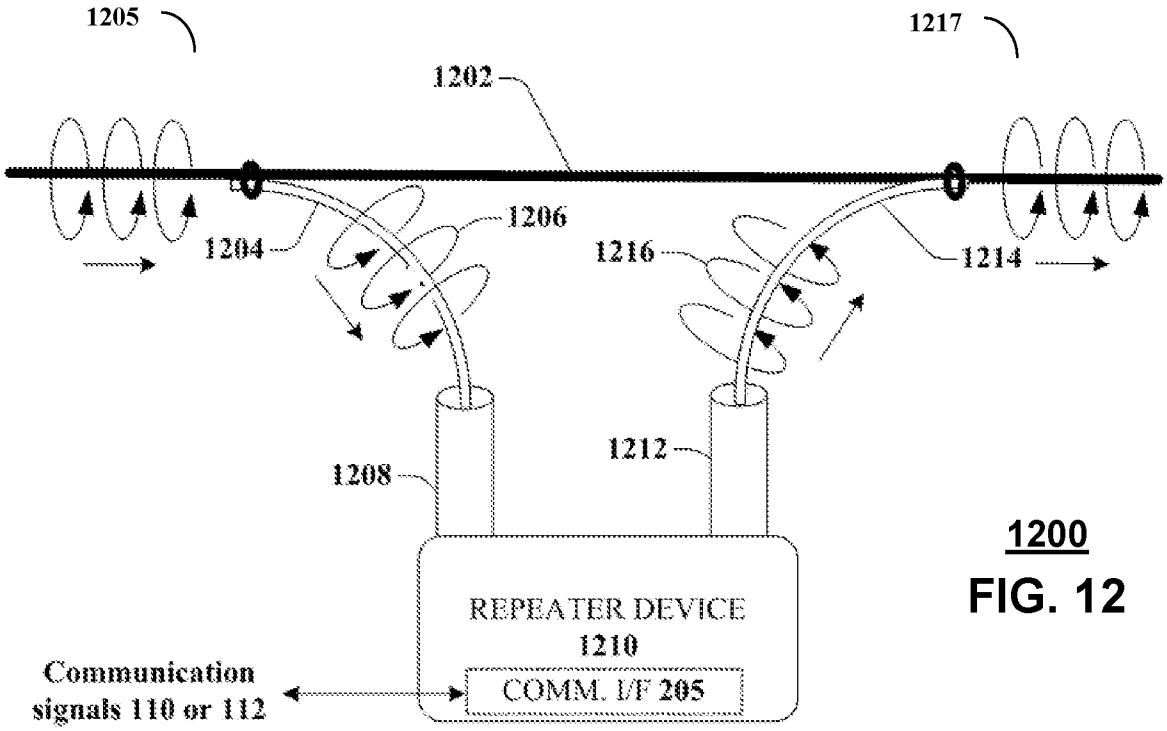

1200

FIG. 12

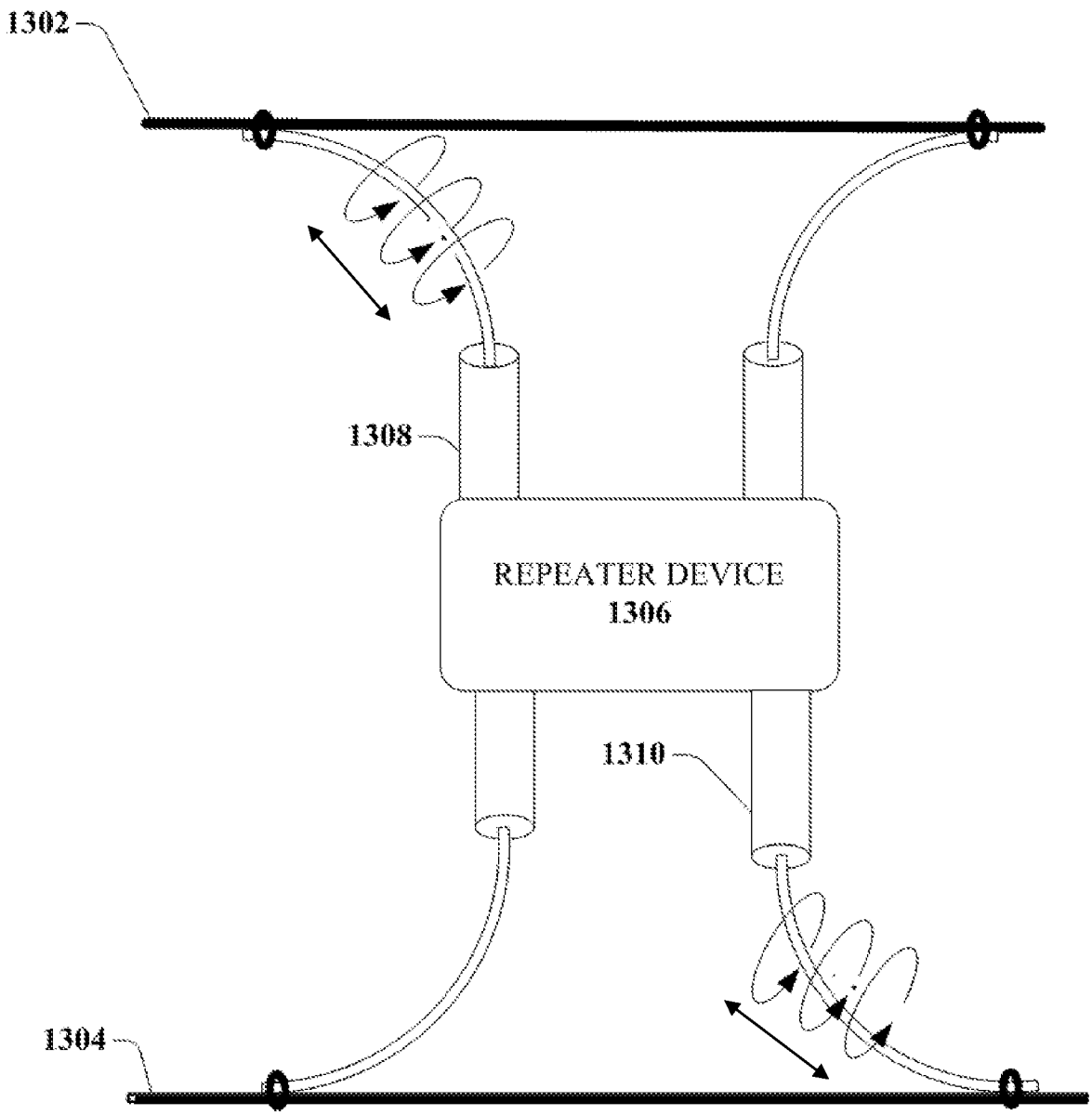

1300

FIG. 13

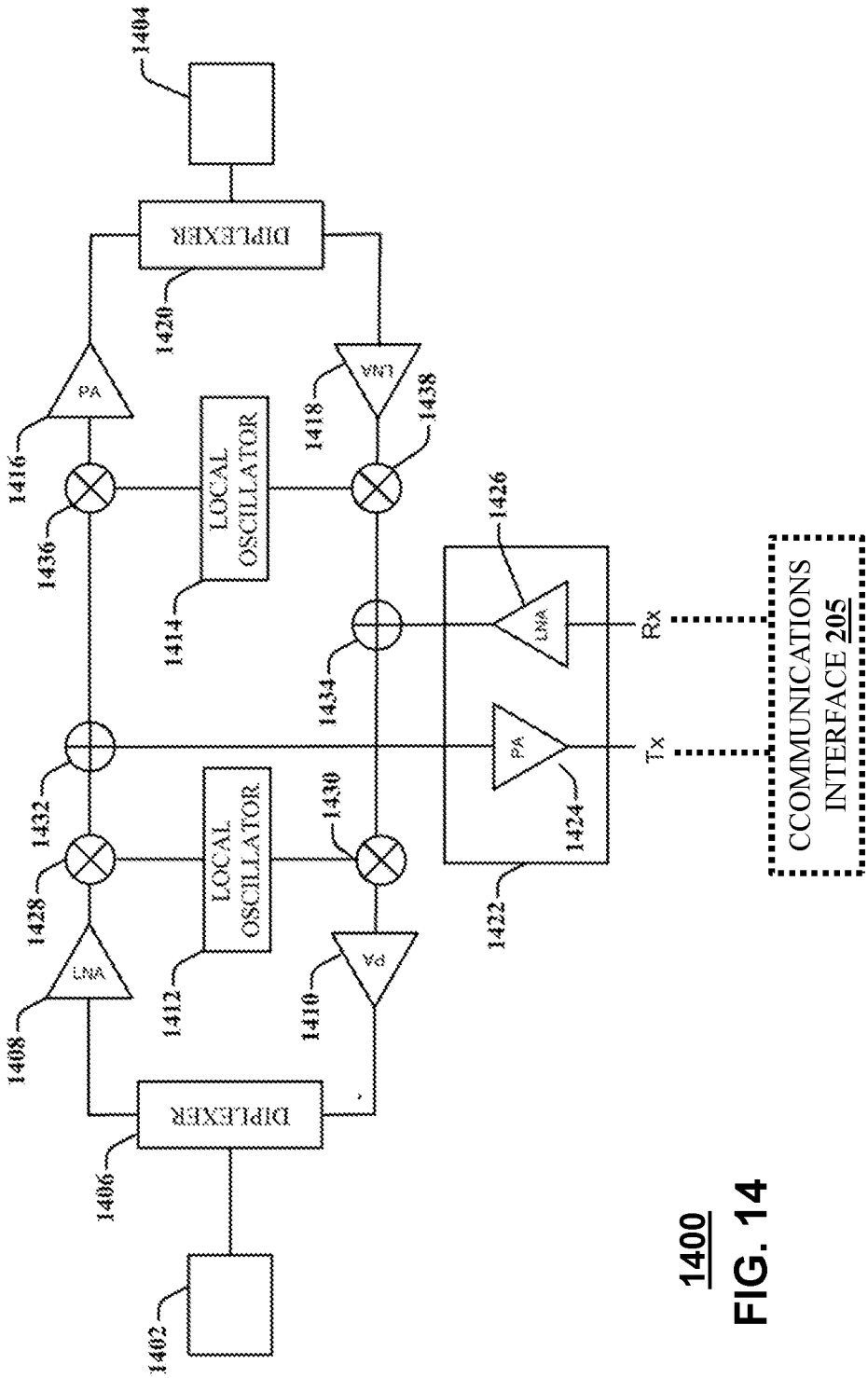
1404
DIPLEXER
1420
PA
1416
LNA
1418
1438
1436
LOCAL OSCILLATOR
1414
1426
LNA
Rx
1434
PA
Tx
1432
1424
1428
LOCAL OSCILLATOR
1430
1422
LNA
1408
1412
PA
1410
DIPLEXER
1406
1402
COMMUNICATIONS INTERFACE 205

1400

FIG. 14

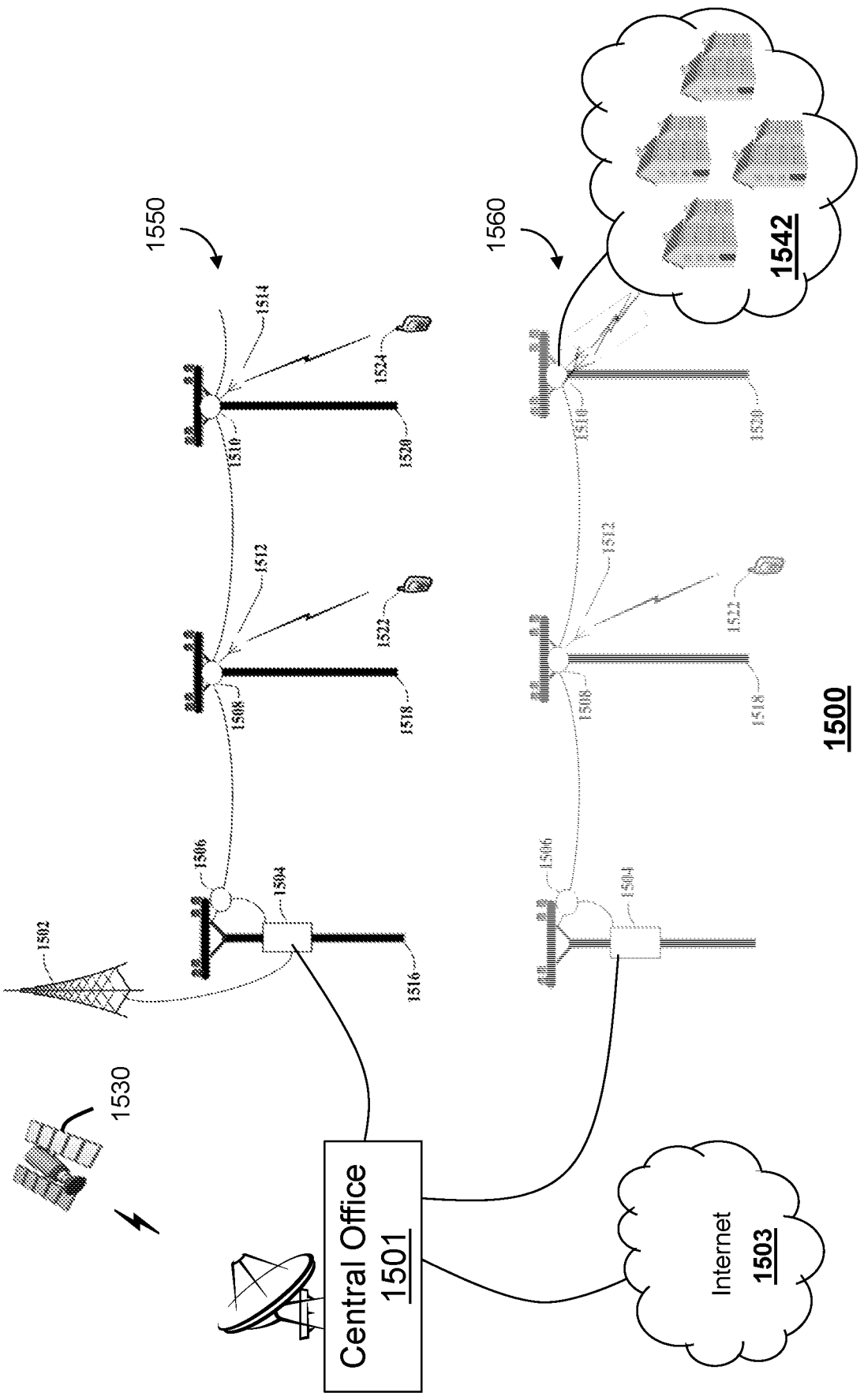
1550
1560
1542
1530
1502
1504
1506
1508
1510
1512
1514
1516
1518
1520
1522
1524
1526
1528
1530
Central Office
1501
Internet
1503

1500

FIG. 15

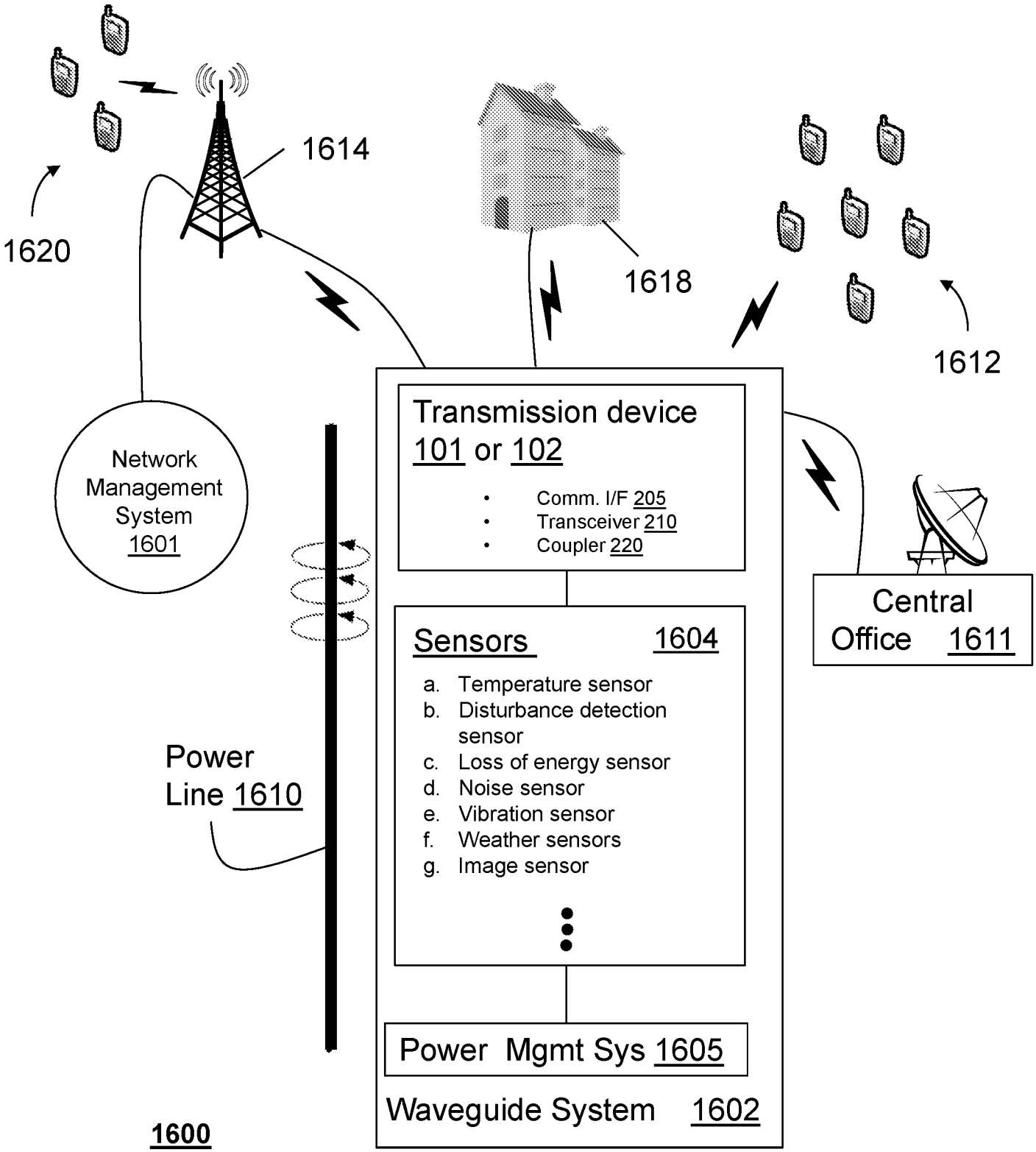
1614
1620
1618
1612
Transmission device
101 or 102
• Comm. I/F 205
• Transceiver 210
• Coupler 220
Network
Management
System
1601
Central
Office 1611
Sensors 1604
a. Temperature sensor
b. Disturbance detection sensor
c. Loss of energy sensor
d. Noise sensor
e. Vibration sensor
f. Weather sensors
g. Image sensor
Power
Line 1610
Power Mgmt Sys 1605
Waveguide System 1602
1600

FIG. 16A

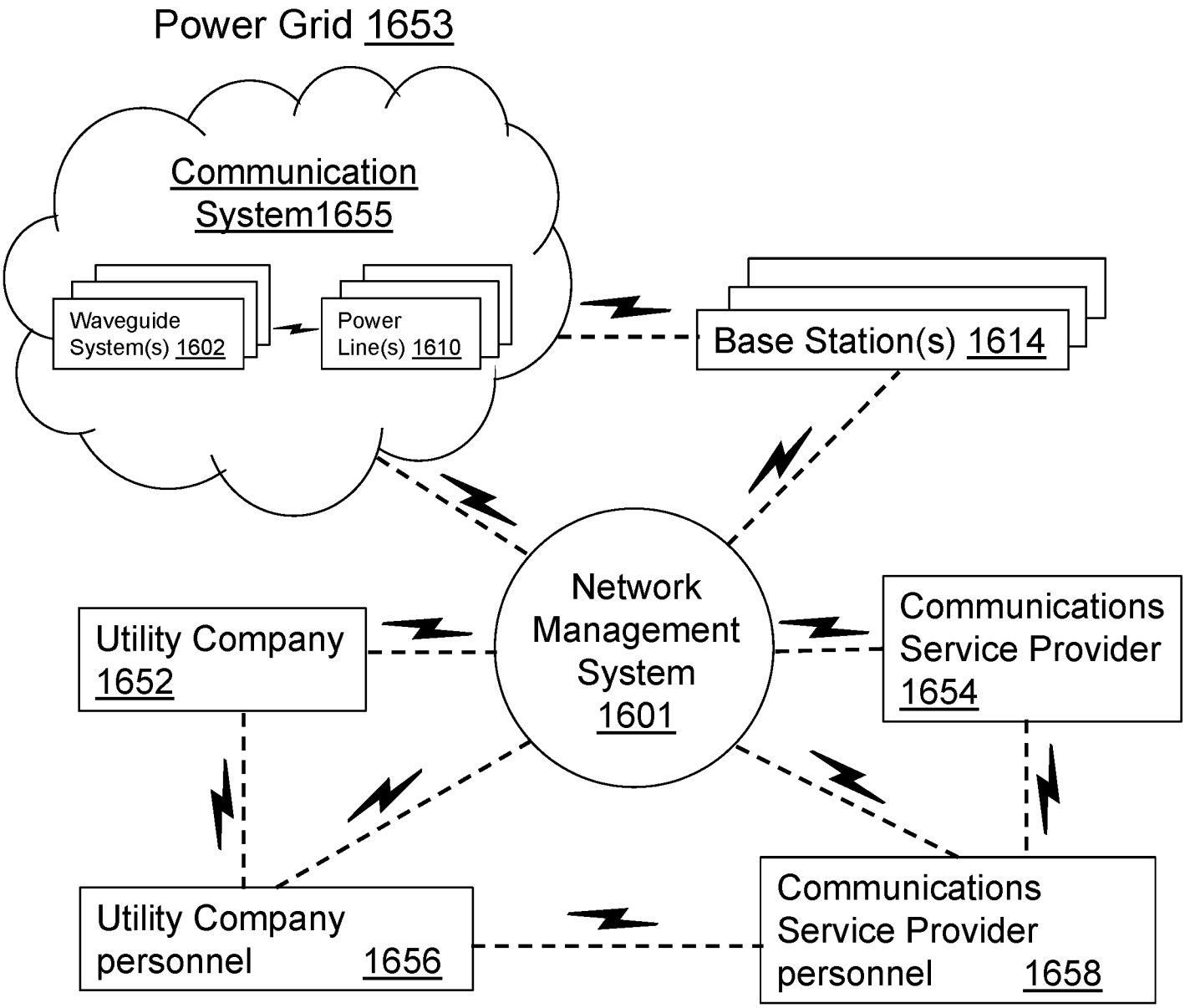
Power Grid 1653
Communication System1655
Waveguide System(s) 1602
Power Line(s) 1610
Base Station(s) 1614
Network Management System 1601
Utility Company 1652
Communications Service Provider 1654
Utility Company personnel 1656
Communications Service Provider personnel 1658

1650

FIG. 16B

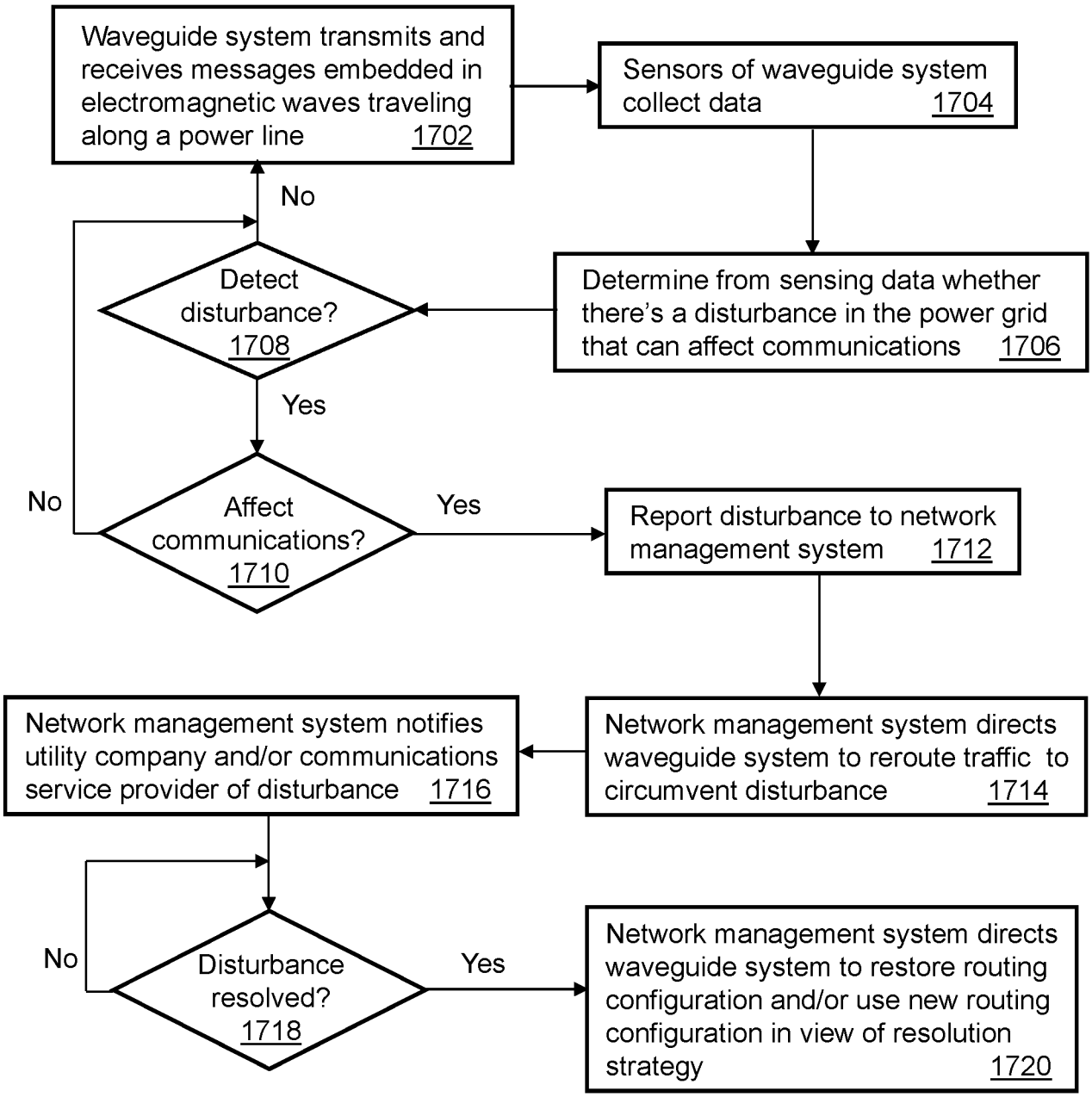
Waveguide system transmits and receives messages embedded in electromagnetic waves traveling along a power line 1702
Sensors of waveguide system collect data 1704
Determine from sensing data whether there's a disturbance in the power grid that can affect communications 1706
Detect disturbance? 1708
No
Yes
Affect communications? 1710
No
Yes
Report disturbance to network management system 1712
Network management system directs waveguide system to reroute traffic to circumvent disturbance 1714
Network management system notifies utility company and/or communications service provider of disturbance 1716
Disturbance resolved? 1718
No
Yes
Network management system directs waveguide system to restore routing configuration and/or use new routing configuration in view of resolution strategy 1720

1700

FIG. 17A

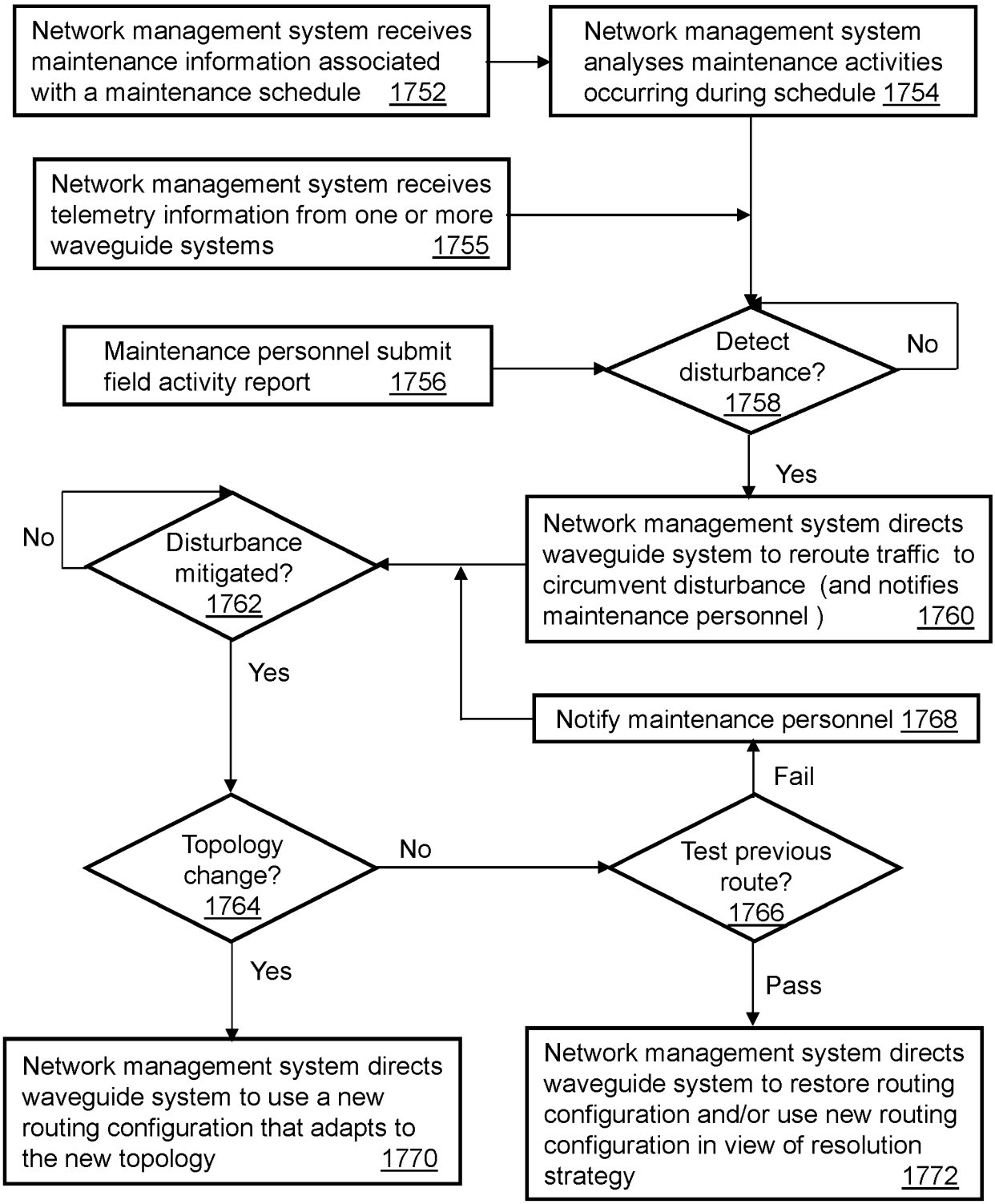
Network management system receives maintenance information associated with a maintenance schedule 1752
Network management system analyses maintenance activities occurring during schedule 1754
Network management system receives telemetry information from one or more waveguide systems 1755
Maintenance personnel submit field activity report 1756
Detect disturbance? 1758
No
Yes
Network management system directs waveguide system to reroute traffic to circumvent disturbance (and notifies maintenance personnel) 1760
No
Disturbance mitigated? 1762
Yes
Notify maintenance personnel 1768
Fail
Topology change? 1764
No
Test previous route? 1766
Yes
Pass
Network management system directs waveguide system to use a new routing configuration that adapts to the new topology 1770
Network management system directs waveguide system to restore routing configuration and/or use new routing configuration in view of resolution strategy 1772

1750

FIG. 17B

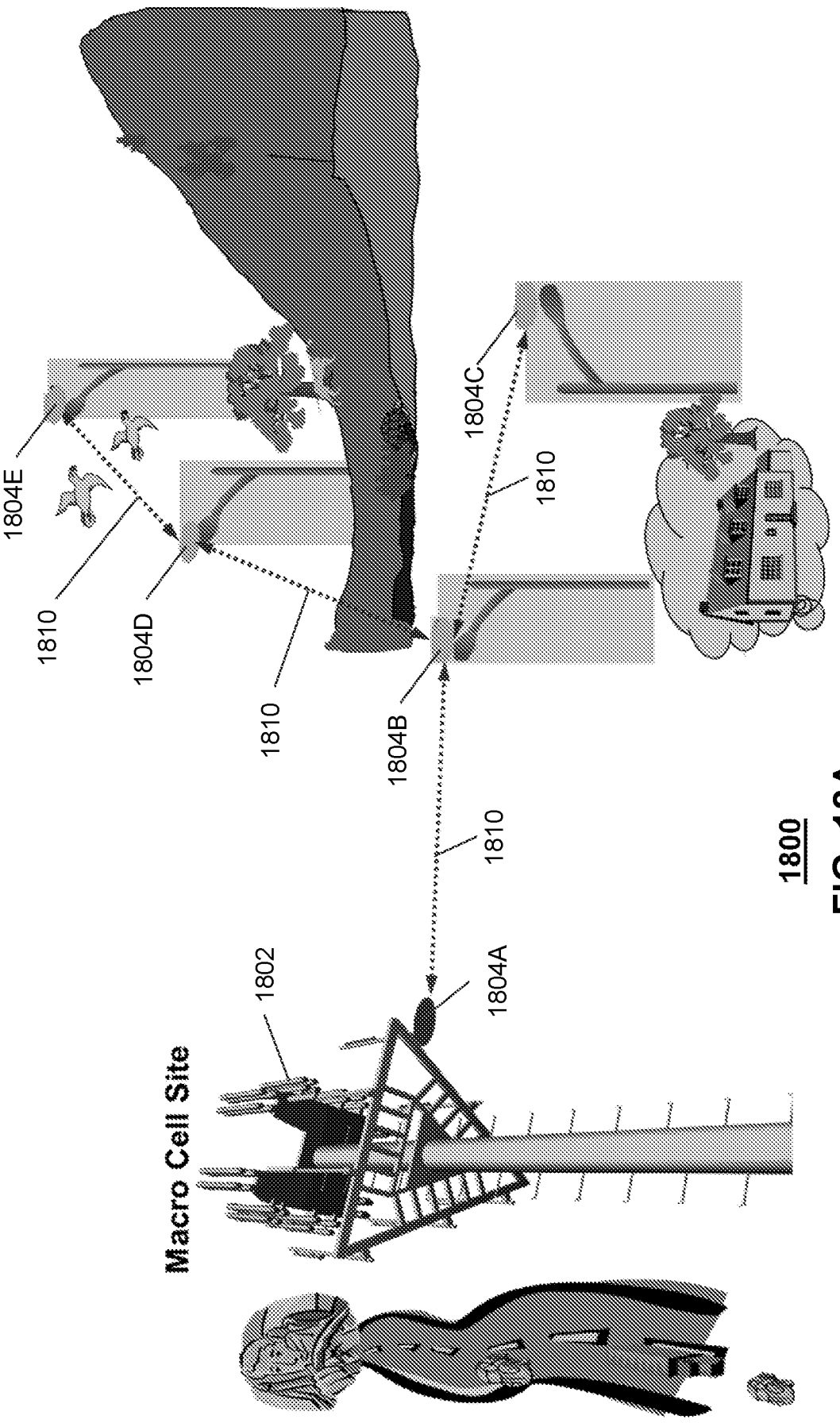
Macro Cell Site
1802
1804A
1810
1804B
1810
1804D
1810
1804E
1804C
1810

1800

FIG. 18A

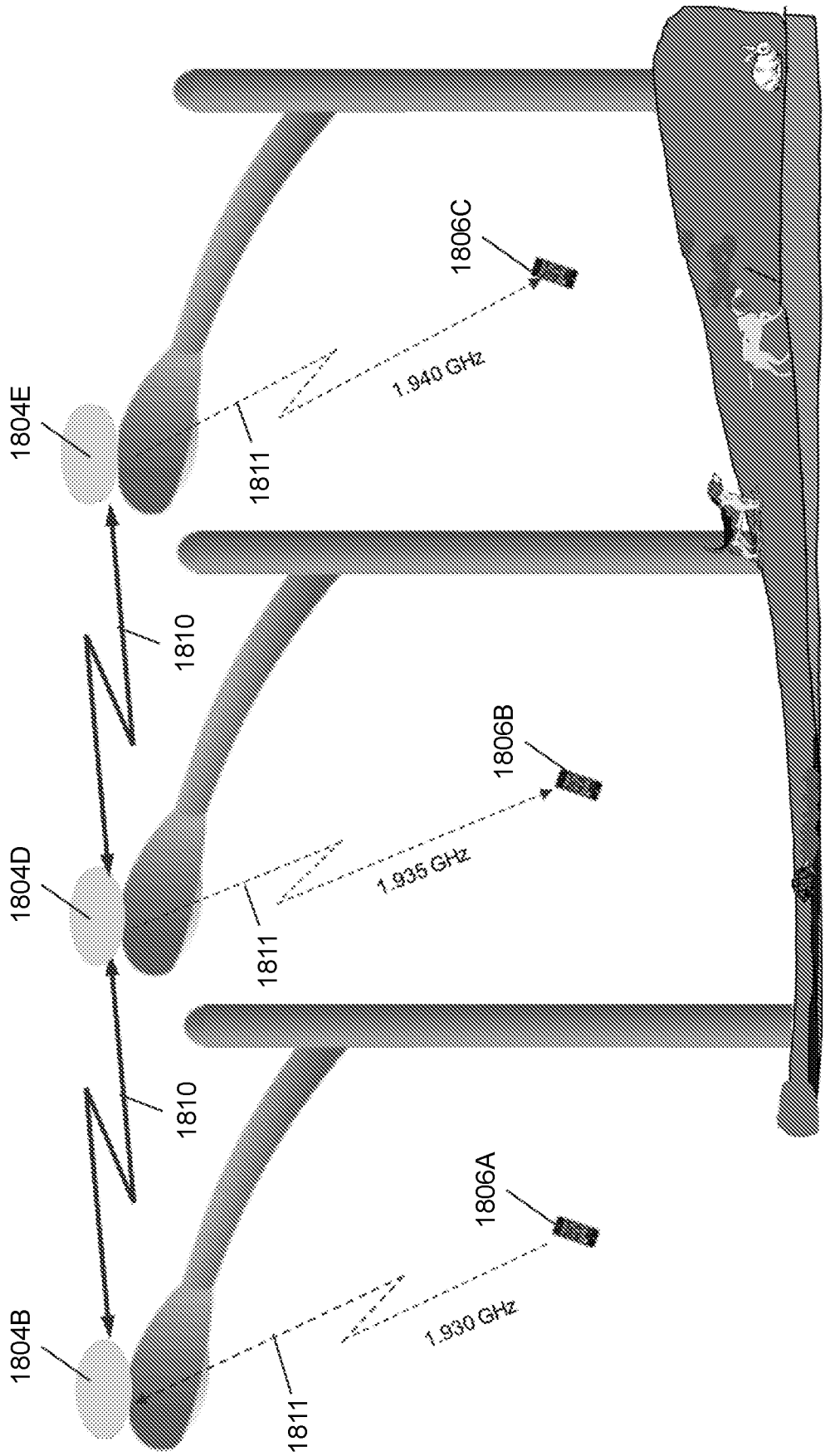
1804E
1806C
1940 GHz
1811
1810
1804D
1806B
1935 GHz
1811
1810
1804B
1806A
1930 GHz
1811

FIG. 18B

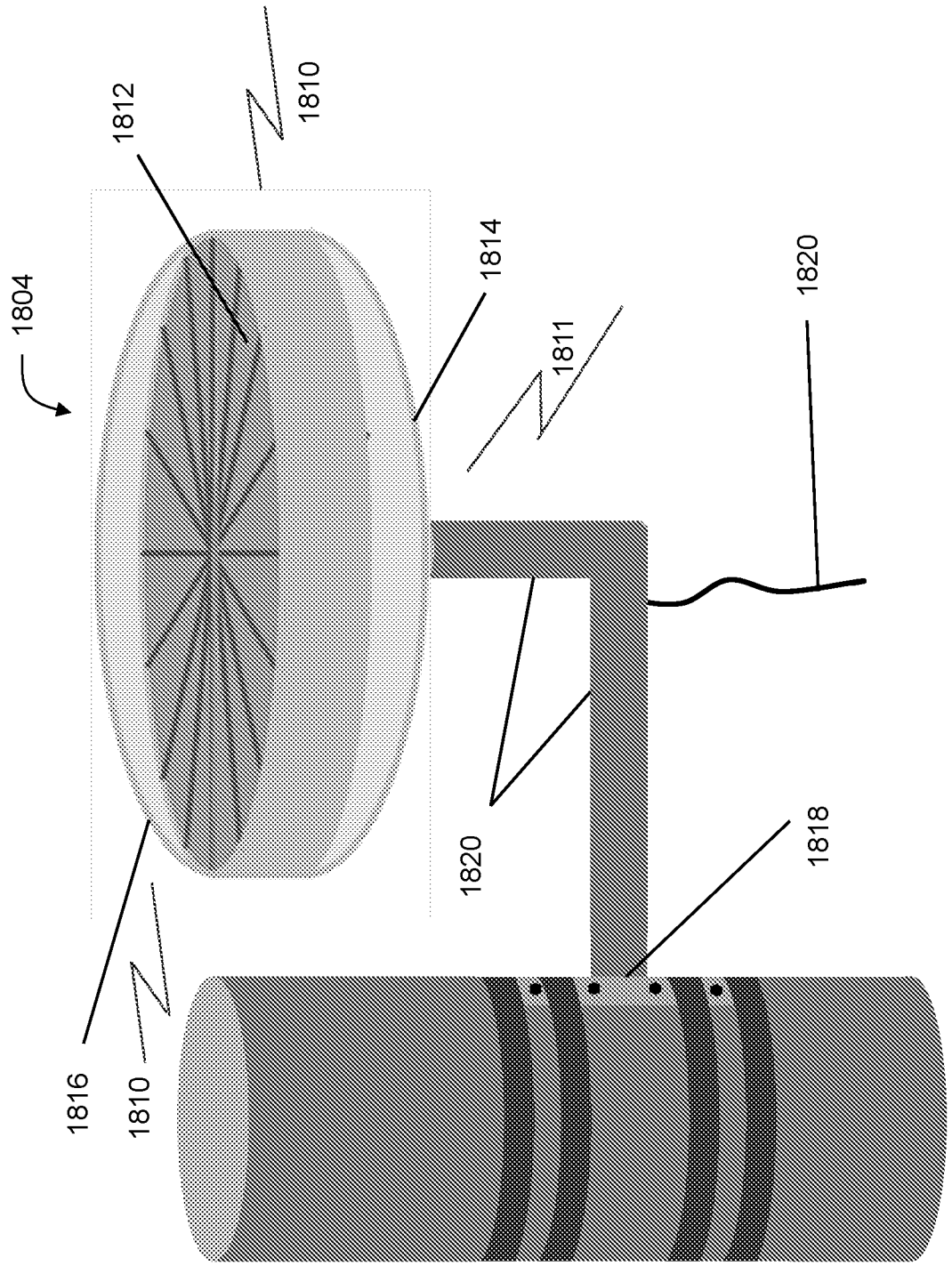

FIG. 18C

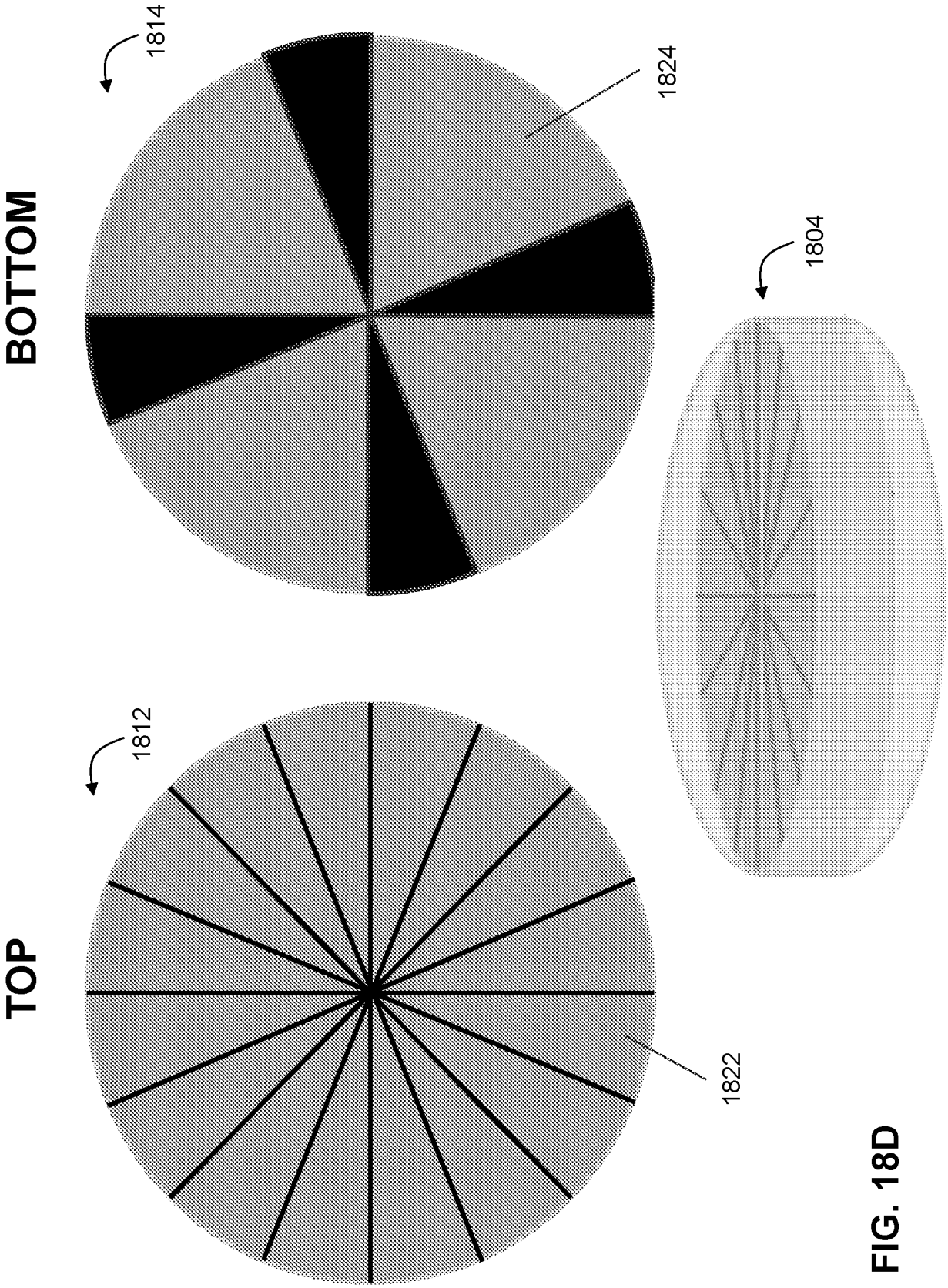

FIG. 18D

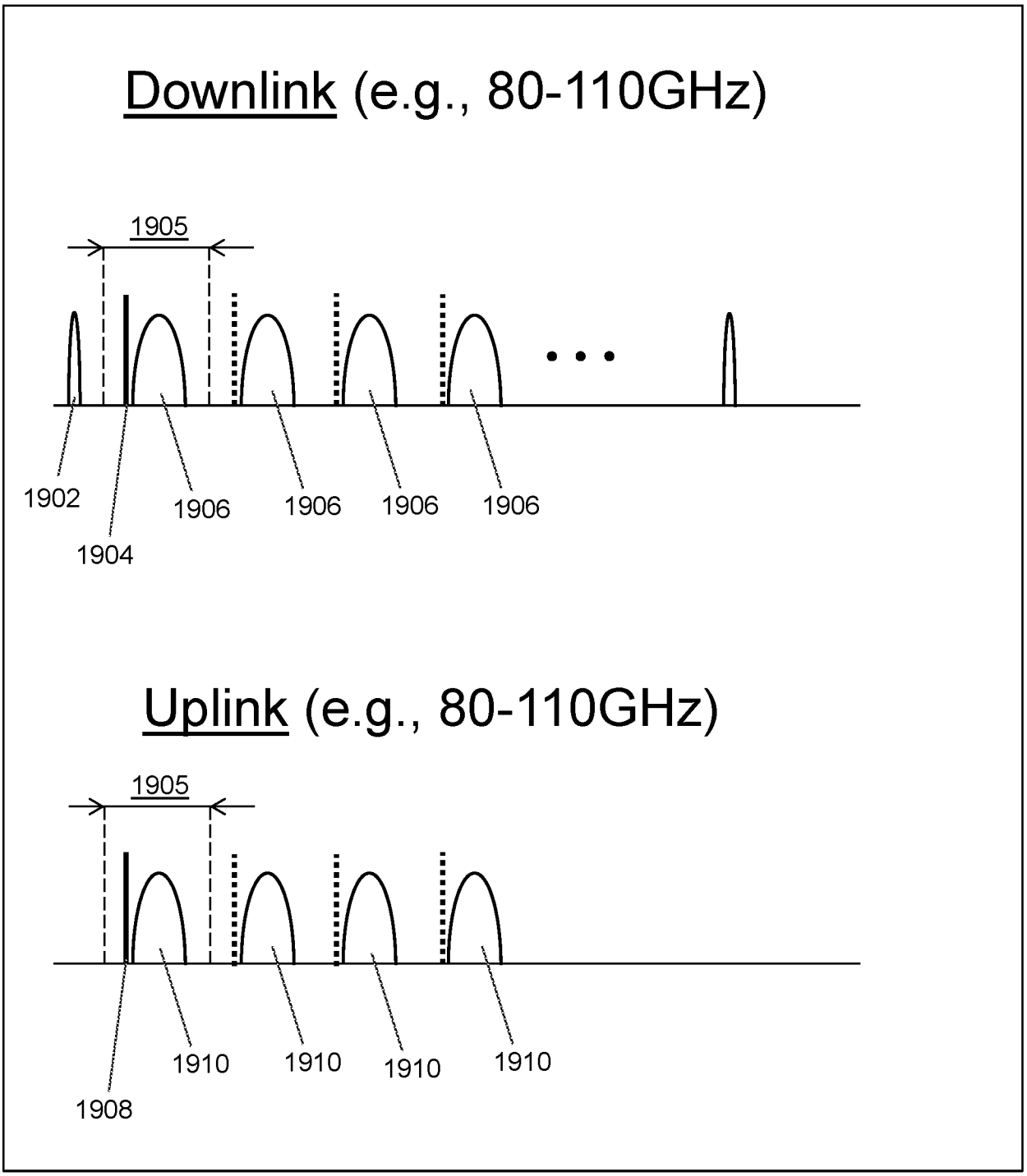
Downlink (e.g., 80-110GHz)
1905
1902
1904
1906
1906
1906
1906
Uplink (e.g., 80-110GHz)
1905
1908
1910
1910
1910
1910

1900

FIG. 19A

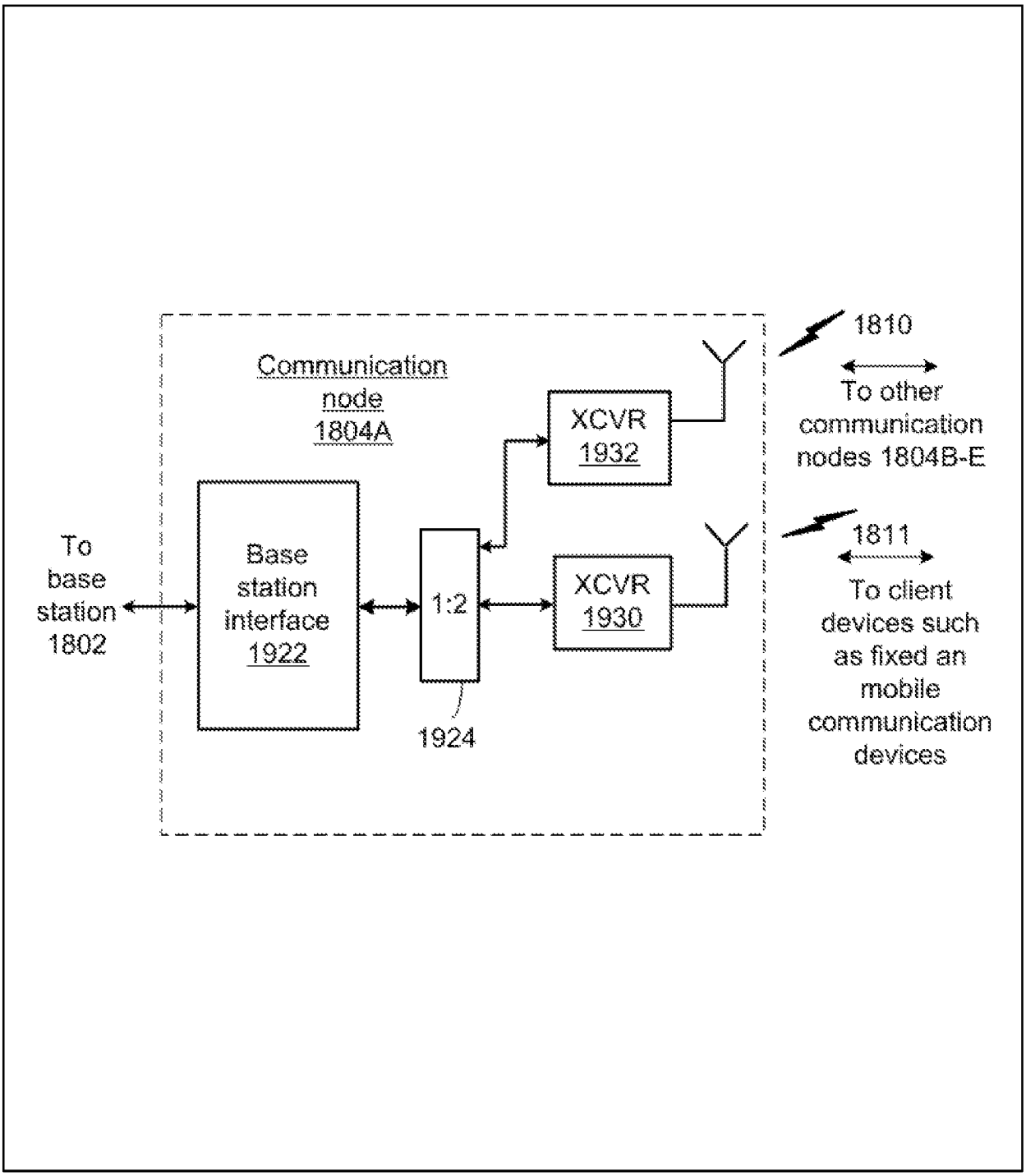
Communication node 1804A
Base station interface 1922
1:2
1924
XCVR 1932
XCVR 1930
To base station 1802
1810
To other communication nodes 1804B-E
1811
To client devices such as fixed an mobile communication devices

1920

FIG. 19B

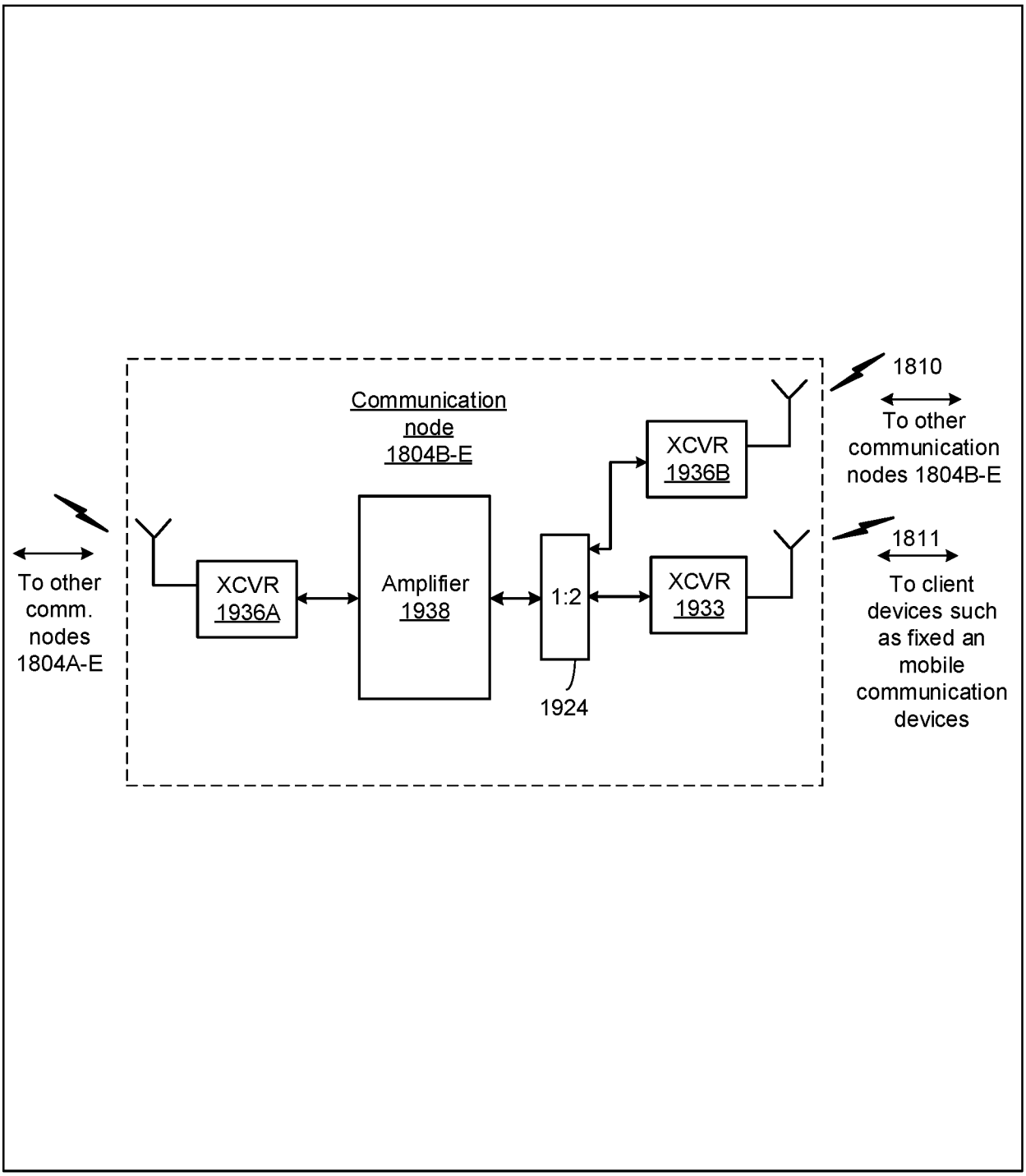
Communication node 1804B-E
XCVR 1936A
Amplifier 1938
1:2
XCVR 1936B
XCVR 1933
1924
To other comm. nodes 1804A-E
1810
To other communication nodes 1804B-E
1811
To client devices such as fixed an mobile communication devices

1935

FIG. 19C

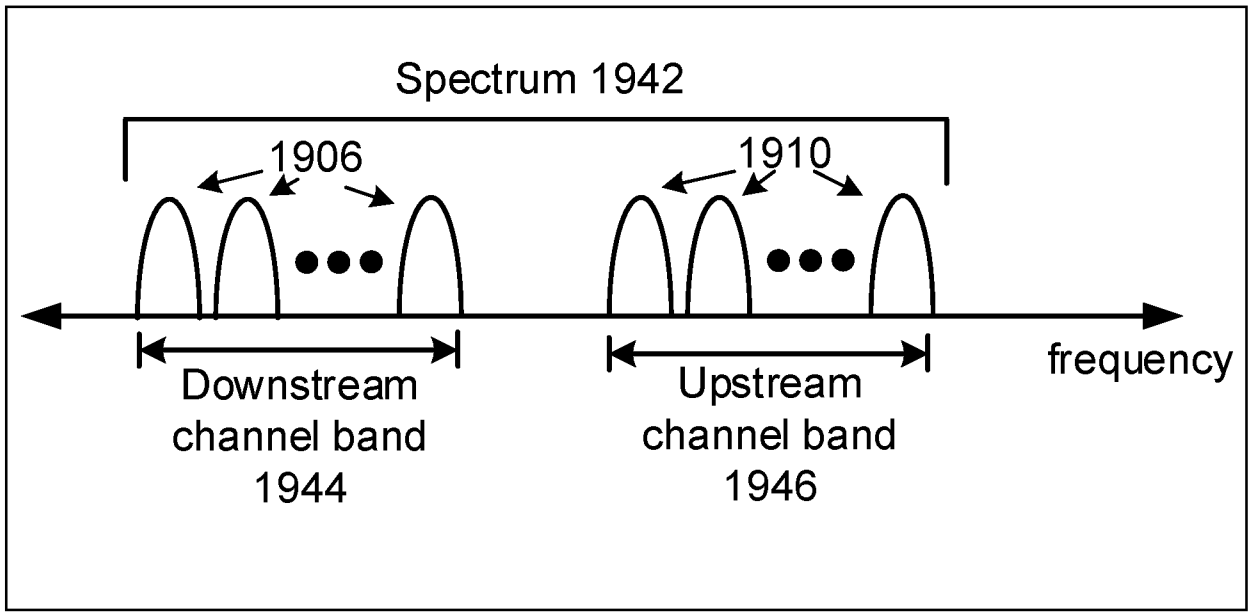

1940

FIG. 19D

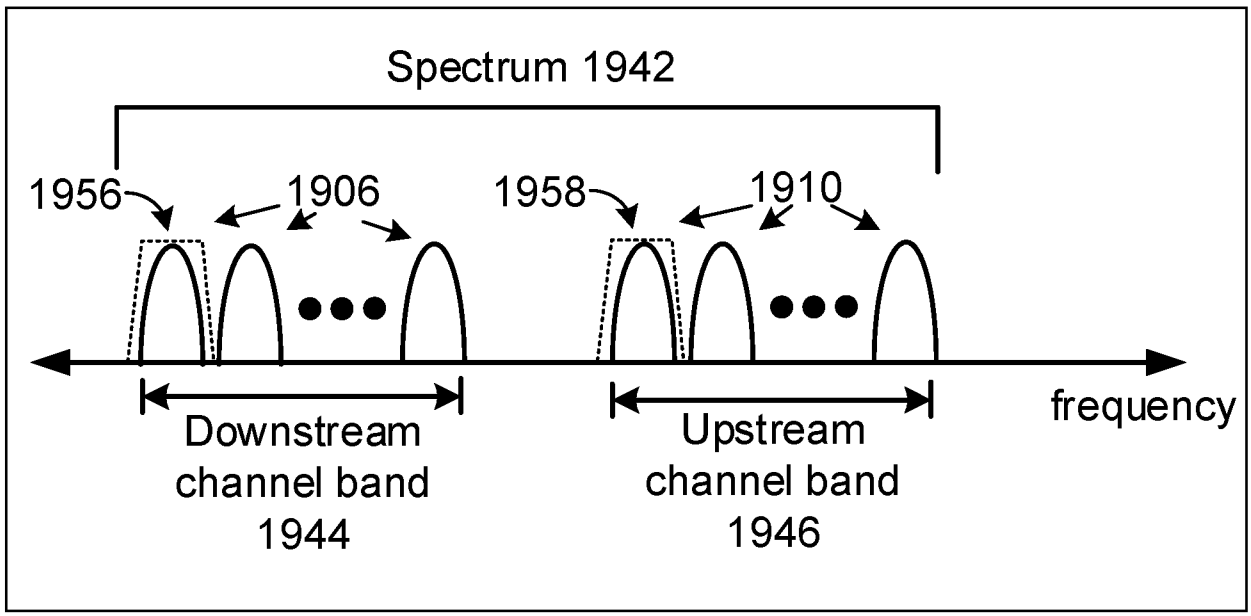

1950

FIG. 19E

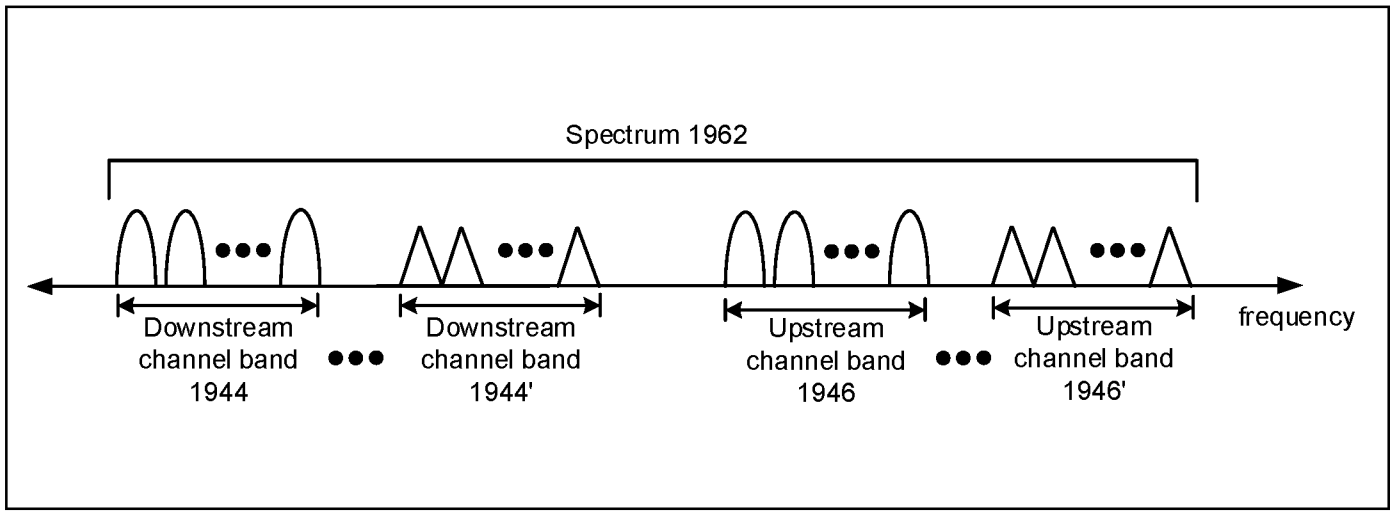

1960

FIG. 19F

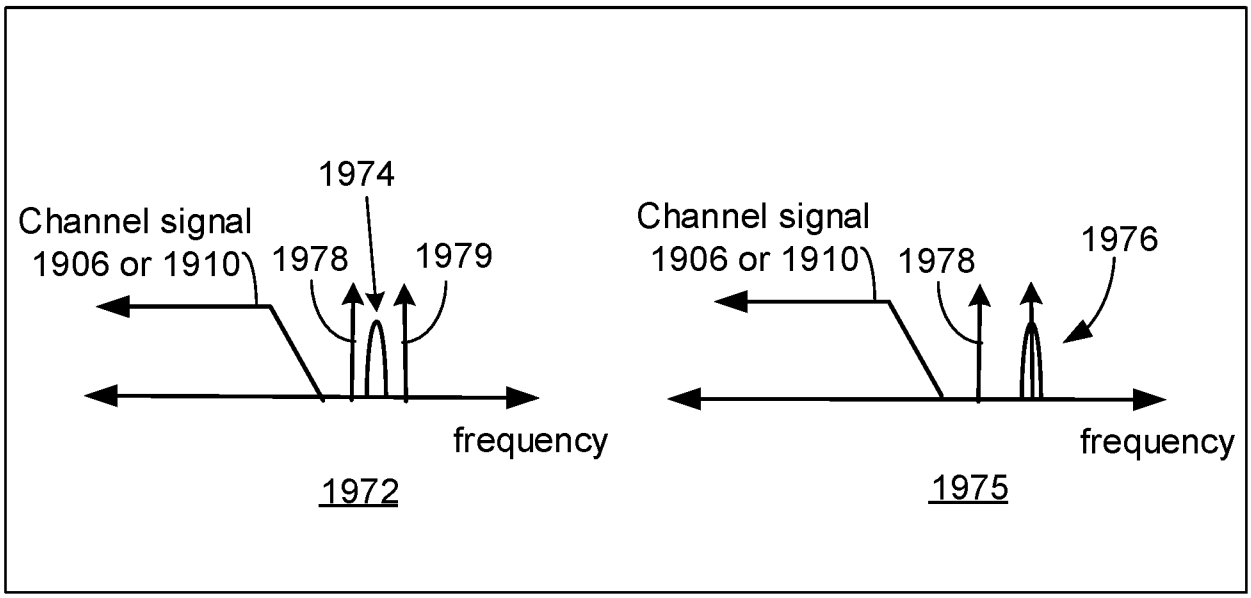

1970

FIG. 19G

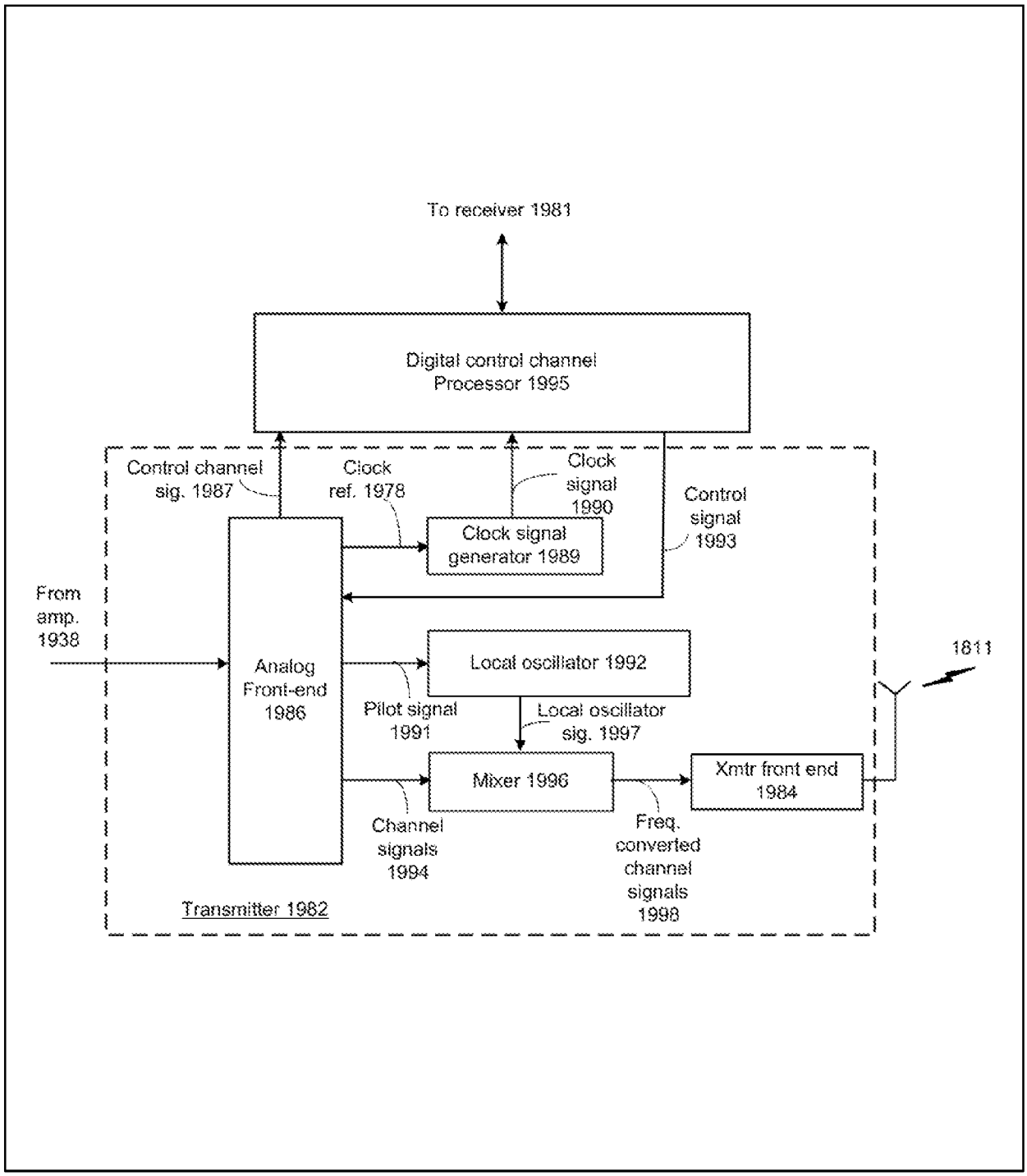
To receiver 1981
Digital control channel Processor 1995
Control channel sig. 1987
Clock ref. 1978
Clock signal 1990
Control signal 1993
Clock signal generator 1989
From amp. 1938
Analog Front-end 1986
Local oscillator 1992
1811
Pilot signal 1991
Local oscillator sig. 1997
Mixer 1996
Xmtr front end 1984
Channel signals 1994
Freq. converted channel signals 1998
Transmitter 1982

1980

FIG. 19H

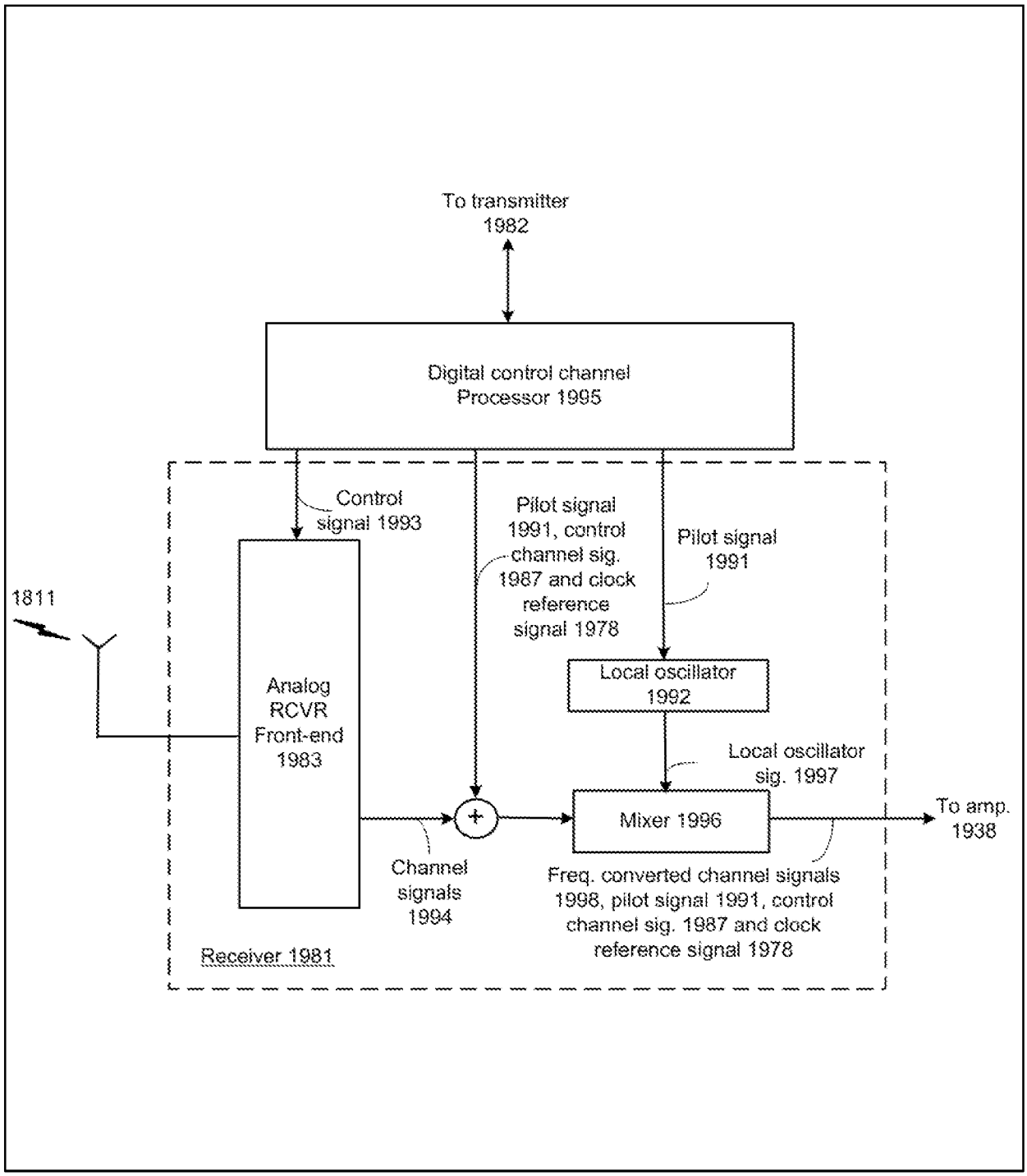
To transmitter 1982
Digital control channel Processor 1995
Control signal 1993
Pilot signal 1991, control channel sig. 1987 and clock reference signal 1978
Pilot signal 1991
1811
Analog RCVR Front-end 1983
Local oscillator 1992
Local oscillator sig. 1997
Mixer 1996
To amp. 1938
Channel signals 1994
Freq. converted channel signals 1998, pilot signal 1991, control channel sig. 1987 and clock reference signal 1978
Receiver 1981

1985

FIG. 19I

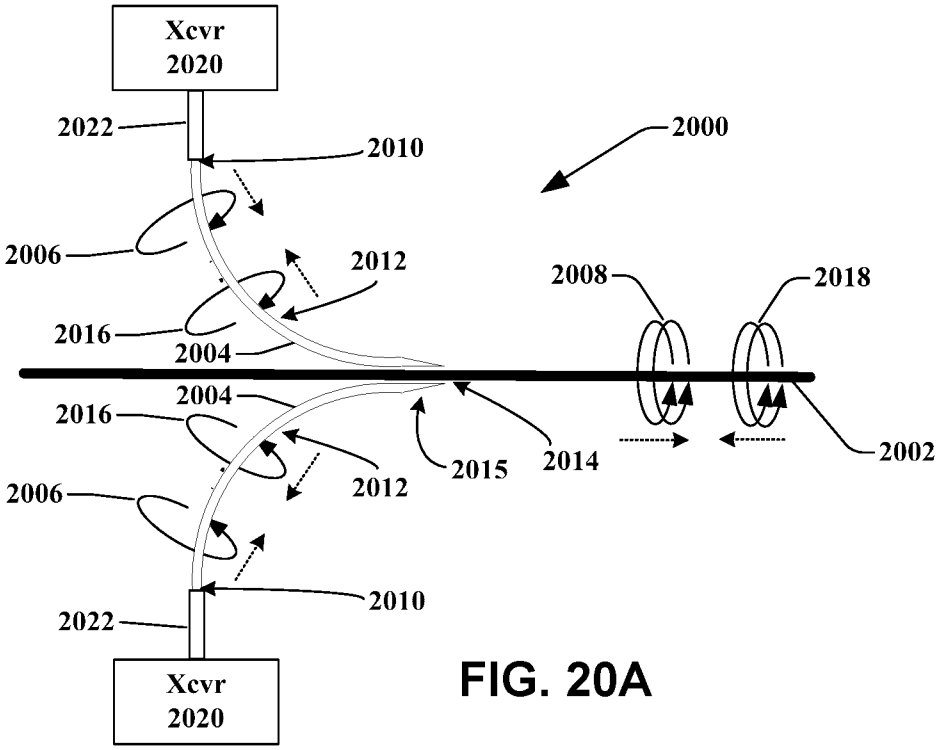

FIG. 20A

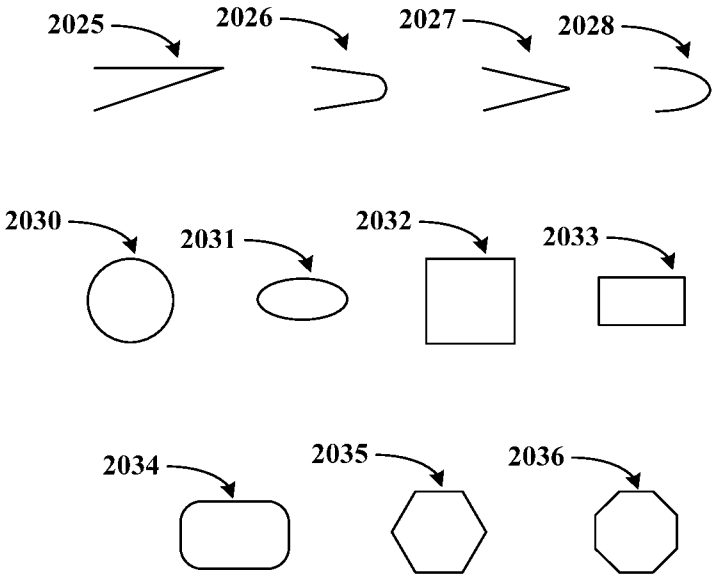

FIG. 20B

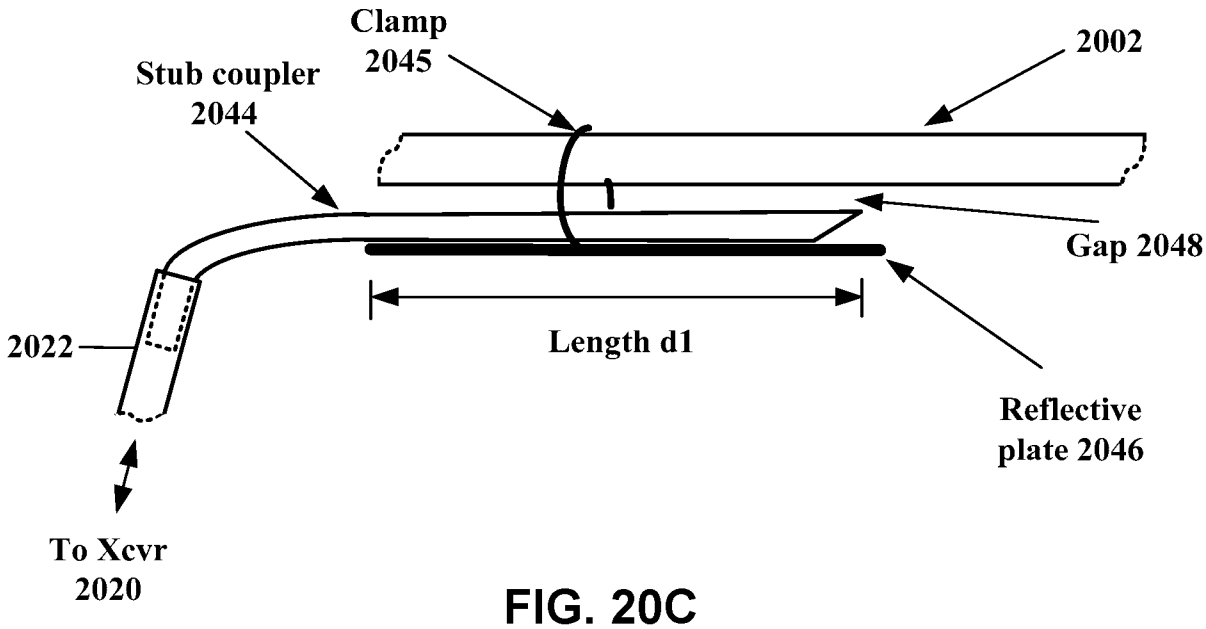

FIG. 20C

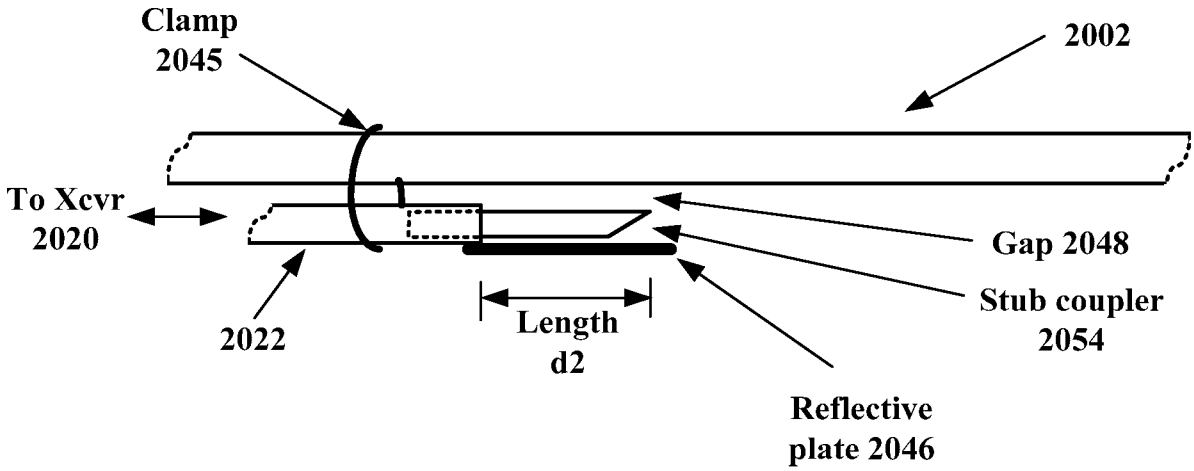

FIG. 20D

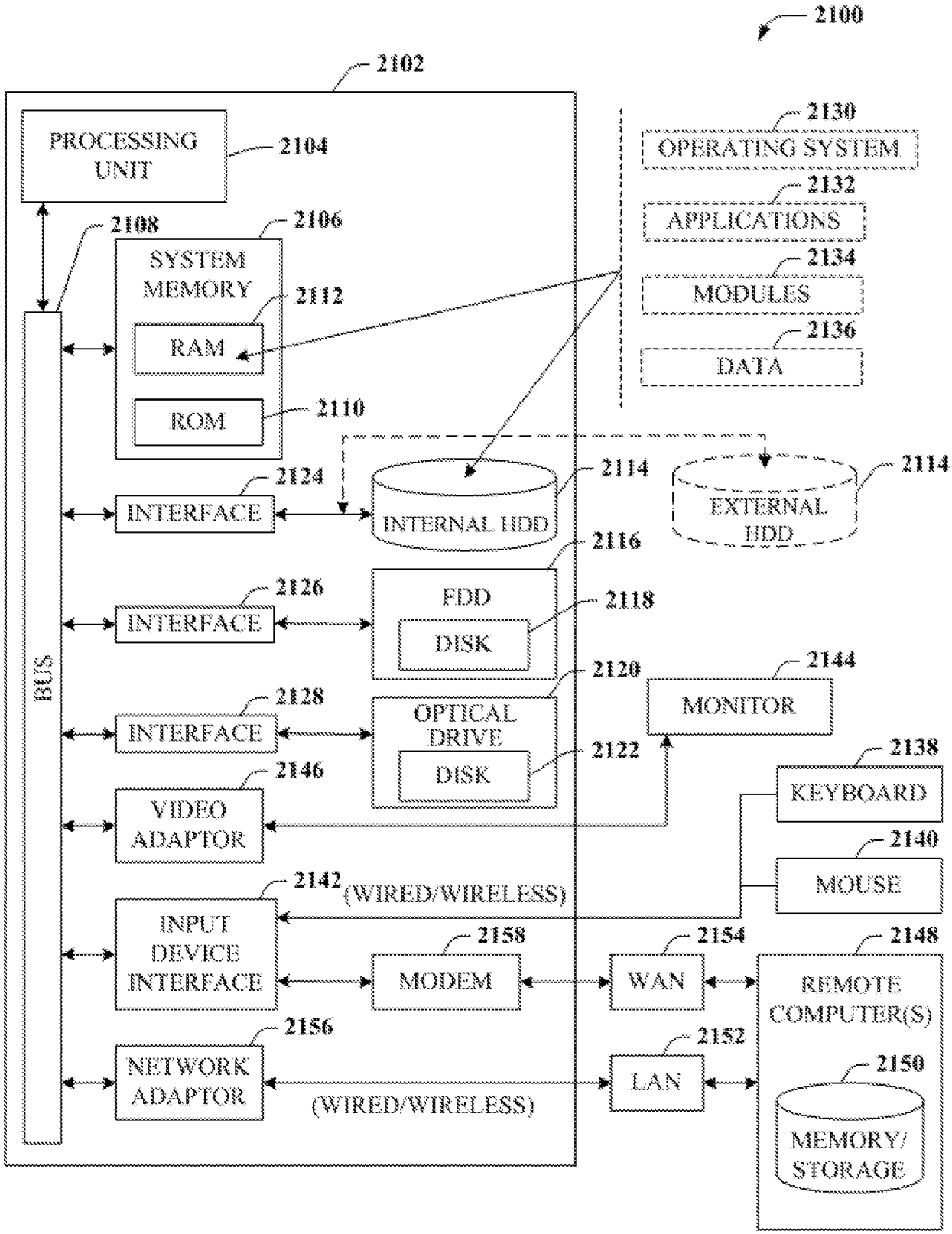
2100
2102
PROCESSING UNIT
2104
2108
2106
SYSTEM MEMORY
2112
RAM
ROM
2110
BUS
2130
OPERATING SYSTEM
2132
APPLICATIONS
2134
MODULES
2136
DATA
2124
INTERFACE
INTERNAL HDD
2114
EXTERNAL HDD
2114
2116
2126
INTERFACE
FDD
DISK
2118
2120
2128
INTERFACE
OPTICAL DRIVE
DISK
2122
2144
MONITOR
2146
VIDEO ADAPTOR
2138
KEYBOARD
2140
MOUSE
2142
(WIRED/WIRELESS)
INPUT DEVICE INTERFACE
2158
MODEM
2154
WAN
2148
REMOTE COMPUTER(S)
2156
NETWORK ADAPTOR
(WIRED/WIRELESS)
2152
LAN
2150
MEMORY/ STORAGE

FIG. 21

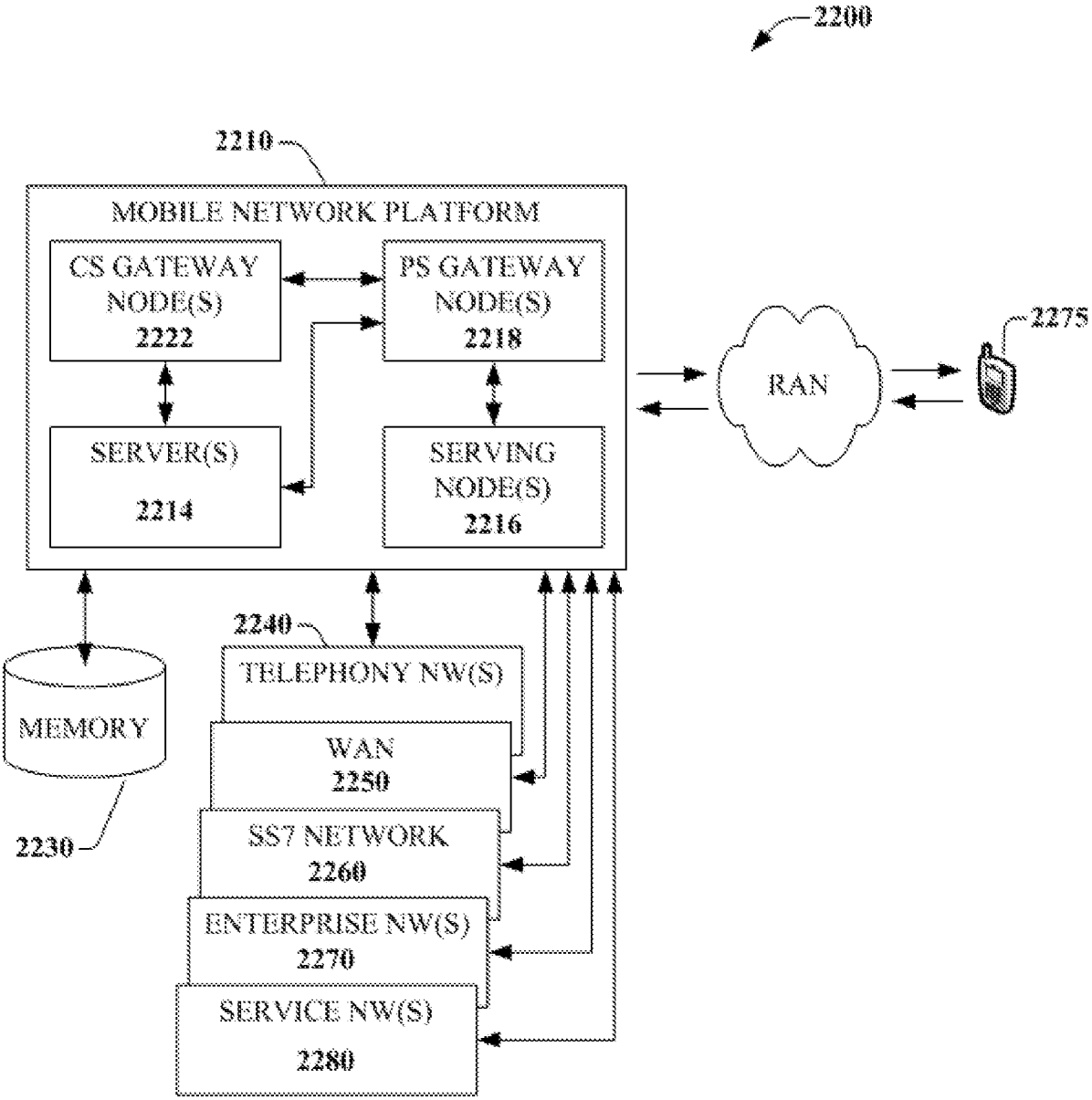
2200
2210
MOBILE NETWORK PLATFORM
CS GATEWAY NODE(S) 2222
PS GATEWAY NODE(S) 2218
SERVER(S) 2214
SERVING NODE(S) 2216
RAN
2275
2240
TELEPHONY NW(S)
MEMORY
WAN 2250
SS7 NETWORK 2260
ENTERPRISE NW(S) 2270
SERVICE NW(S) 2280
2230

FIG. 22

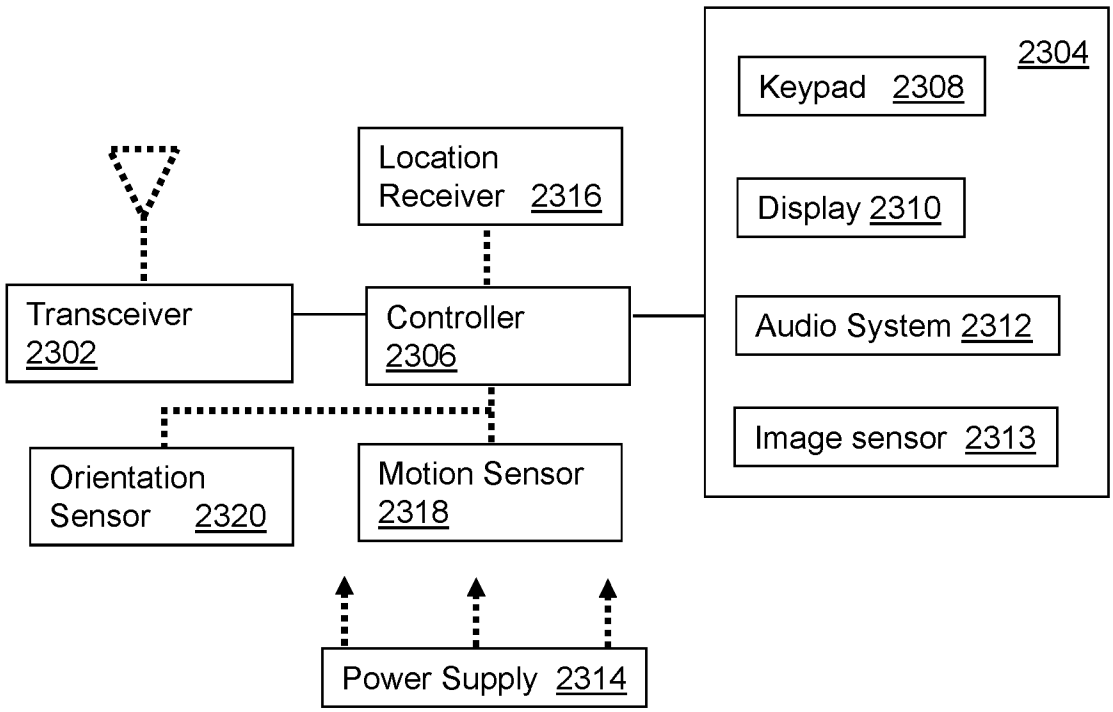
2304
Keypad 2308
Location Receiver 2316
Display 2310
Transceiver 2302
Controller 2306
Audio System 2312
Image sensor 2313
Orientation Sensor 2320
Motion Sensor 2318
Power Supply 2314

2300

FIG. 23

INTERNATIONAL SEARCH REPORT

International application No
PCT/US2017/052473

A. CLASSIFICATION OF SUBJECT MATTER
INV. H01P5/18
ADD.

According to International Patent Classification (IPC) or to both national classification and IPC

B. FIELDS SEARCHED

Minimum documentation searched (classification system followed by classification symbols)
H01P

Documentation searched other than minimum documentation to the extent that such documents are included in the fields searched

Electronic data base consulted during the international search (name of data base and, where practicable, search terms used)
EPO-Internal, INSPEC

C. DOCUMENTS CONSIDERED TO BE RELEVANT

Category*	Citation of document, with indication, where appropriate, of the relevant passages	Relevant to claim No.
A	US 2016/112094 A1 (STUCKMAN BRUCE [US] ET AL) 21 April 2016 (2016-04-21) paragraph [0105]; figure 5 paragraph [0193] - paragraph [0203]; figures 20a, 20b	1-15
A	FICKENSCHE: "Theoretical and experimental results of aperture coupling between image guides", 20071008, vol. 1, no. 5, 8 October 2007 (2007-10-08) , pages 1042-1045, XP006029680, * Section 2 Theoretical Analysis *	1-15

-/--

[X] Further documents are listed in the continuation of Box C.

[X] See patent family annex.

* Special categories of cited documents :

"A" document defining the general state of the art which is not considered to be of particular relevance

"E" earlier application or patent but published on or after the international filing date

"L" document which may throw doubts on priority claim(s) or which is cited to establish the publication date of another citation or other special reason (as specified)

"O" document referring to an oral disclosure, use, exhibition or other means

"P" document published prior to the international filing date but later than the priority date claimed

"T" later document published after the international filing date or priority date and not in conflict with the application but cited to understand the principle or theory underlying the invention

"X" document of particular relevance; the claimed invention cannot be considered novel or cannot be considered to involve an inventive step when the document is taken alone

"Y" document of particular relevance; the claimed invention cannot be considered to involve an inventive step when the document is combined with one or more other such documents, such combination being obvious to a person skilled in the art

"&" document member of the same patent family

Date of the actual completion of the international search	Date of mailing of the international search report
14 December 2017	21/12/2017

Name and mailing address of the ISA/	Authorized officer
European Patent Office, P.B. 5818 Patentlaan 2 NL - 2280 HV Rijswijk Tel. (+31-70) 340-2040, Fax: (+31-70) 340-3016	La Casta Muñoa, S

INTERNATIONAL SEARCH REPORT

International application No
PCT/US2017/052473

C(Continuation). DOCUMENTS CONSIDERED TO BE RELEVANT

Category*	Citation of document, with indication, where appropriate, of the relevant passages	Relevant to claim No.
A	JOSÉ RODRÍGUEZ ET AL: "Wide-Band Directional Couplers in Dielectric Waveguide", IEEE TRANSACTIONS ON MICROWAVE THEORY AND TECHNIQUES, PLENUM, USA, vol. MTT-35, no. 8, 1 January 1987 (1987-01-01), pages 681-687, XP001366366, ISSN: 0018-9480 * Section II. Theory *	1-15
A	MARK A MCHENRY ET AL: "Coupled-Mode Theory of Two Nonparallel Dielectric Waveguides", IEEE TRANSACTIONS ON MICROWAVE THEORY AND TECHNIQUES, PLENUM, USA, vol. MTT-32, no. 11, 1 November 1984 (1984-11-01), pages 1469-1475, XP001366358, ISSN: 0018-9480 * Section III. Analysis of couplers formed with circularly curved slab waveguides * * Appendix II, Appendix III*	1-15

INTERNATIONAL SEARCH REPORT

Information on patent family members

International application No
PCT/US2017/052473

Patent document cited in search report	Publication date	Patent family member(s)	Publication date
US 2016112094 A1	21-04-2016	CA 2964257 A1	28-04-2016
		CN 107005278 A	01-08-2017
		EP 3210254 A1	30-08-2017
		KR 20170071600 A	23-06-2017
		US 2016112094 A1	21-04-2016
		US 2017085295 A1	23-03-2017
		WO 2016064506 A1	28-04-2016