June 3, 1930. K. F. MARX 1,761,221

MEANS FOR REDUCTION OF FIRE HAZARDS IN VEHICLES

Filed July 15, 1927

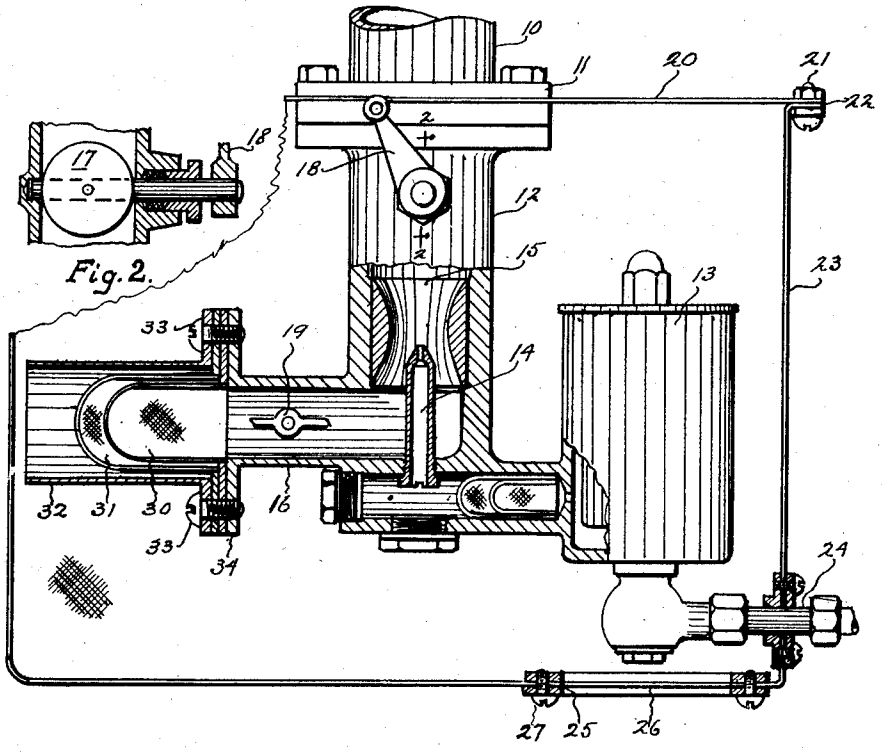

Fig. 2.

Fig. 1.

INVENTOR
Karl F. Marx
BY
Francis D. Hardesty
ATTORNEY

Patented June 3, 1930 1,761,221

UNITED STATES PATENT OFFICE

KARL F. MARX, OF DETROIT, MICHIGAN, ASSIGNOR TO ARTHUR E. FIXEL, OF DETROIT, MICHIGAN

MEANS FOR REDUCTION OF FIRE HAZARDS IN VEHICLES

Application filed July 15, 1927. Serial No. 206,011.

The present invention relates to means for reduction of fire hazards in vehicles or other places or mechanisms in which internal combustion engines are used.

The most common form of internal combustion engine comprises a carburetor in which comminuted or vaporized fuel is mixed with air to produce a suitably explosive mixture which is then taken into the cylinders of the engine and ignited. Sometimes, however, through faulty operation, due to various causes, a body of the explosive mixture becomes ignited in the induction pipe and in exploding or burning expands backward through the carburetor and causes projection of flaming gases from the air inlet, this being usually a comparatively large unrestricted opening. Such an explosion or burning is commonly called "back firing." In such cases, if it so happens that there is in the immediate locality an inflammable gas mixture due to fuel leakage or spillage or other highly inflammable and easily ignitable material, such material is liable to be ignited with disastrous results.

Among the objects of the present invention therefore is to prevent such results.

Another object is to avoid ignition of adjacent materials or parts of such installations and at the same time not interfere with the normal operation of the engine.

Other objects will readily appear to those skilled in the art upon reference to the following description and accompanying drawing in which Figure 1 illustrates more or less conventionally a carburetor embodying the invention and Fig. 2 a section on line 2—2 of Fig. 1.

Referring to the drawing, an intake manifold for an internal combustion engine is shown at 10 with the usual flange 11 for the attachment of a carburetor. Secured to said flange is a carburetor 12 having the usual float bowl 13, fuel jet 14, mixing chamber 15 and air inlet 16. Above the mixing chamber is a butterfly throttle valve 17 having a control lever 18 and in air inlet 16 a choke valve 19 may be used.

Instead of securing the carburetor 12 directly to flange 11 as is usual, a sheet of metal gauze or fine mesh woven wire screen 20 will be placed between with a suitable opening so as not to obstruct the gas and air mixture. This sheet will be provided with suitable holes at its edges for the passage of bolts 21 by means of which the flange 22 of a box or container 23 of like material may be secured to sheet 20 so as to enclose the entire carburetor in a protective screen of finely foraminous material. Casing 23 may be provided with suitable openings for the passage of the fuel supply pipe 24 and for making whatever connections and adjustments may be necessary. Such an opening as the latter is indicated at 25 with a small piece of the screen 26 secured over it as by screws 27.

Such a screen container furnishes an effective barrier against the passage of flame from air inlet 16 to the outside but does not materially affect the operation of the carburetor as because of its comparatively large area it does not cause a material depression of the pressure within said casing when the engine is operating.

An additional defense against such flame projection is shown at 30 and 31, these being thimbles of similar foraminous material mounted within an extension 32 secured to the air inlet 16 of the carburetor. Both thimbles may be flanged as may also the extension and all secured as by screws 33 to a suitable flange 34 on the air inlet 16.

The present invention is especially adapted for airplane or other air vehicle engines and is designed particularly for such use, as fires on such vehicles are much more hazardous than elsewhere on account of the nature of the travel, etc., the invention will therefore be claimed specifically for such purposes.

Now having described the invention and the preferred form of embodiment thereof, it is to be understood that the said invention is to be limited, not to the specific details herein set forth and illustrated but only by the scope of the claims which follow.

I claim:—

1. An internal combustion engine having a carburetor and an enclosing casing for the latter of finely foraminous metallic material.

2. In an air vehicle having an internal

combustion engine provided with a carburetor means for preventing projection of flame from said carburetor upon "back firing" of said engine, said means comprising an enclosing casing for said carburetor of finely foraminous metallic material and a second screen of similar material enclosing the air inlet of said carburetor.

3. In an air vehicle having an internal combustion engine provided with a carburetor means for preventing projection of flame from said carburetor upon "back firing" of said engine, said means comprising an enclosing casing for said carburetor of finely foraminous metallic material and a plurality of screens of similar material enclosing the air inlet of said carburetor.

KARL F. MARX.