J. M. MAXWELL.

SHEARING MACHINE.

APPLICATION FILED JUNE 22, 1906.

**932,992.**

**Patented Aug. 31, 1909**

2 SHEETS—SHEET 1.

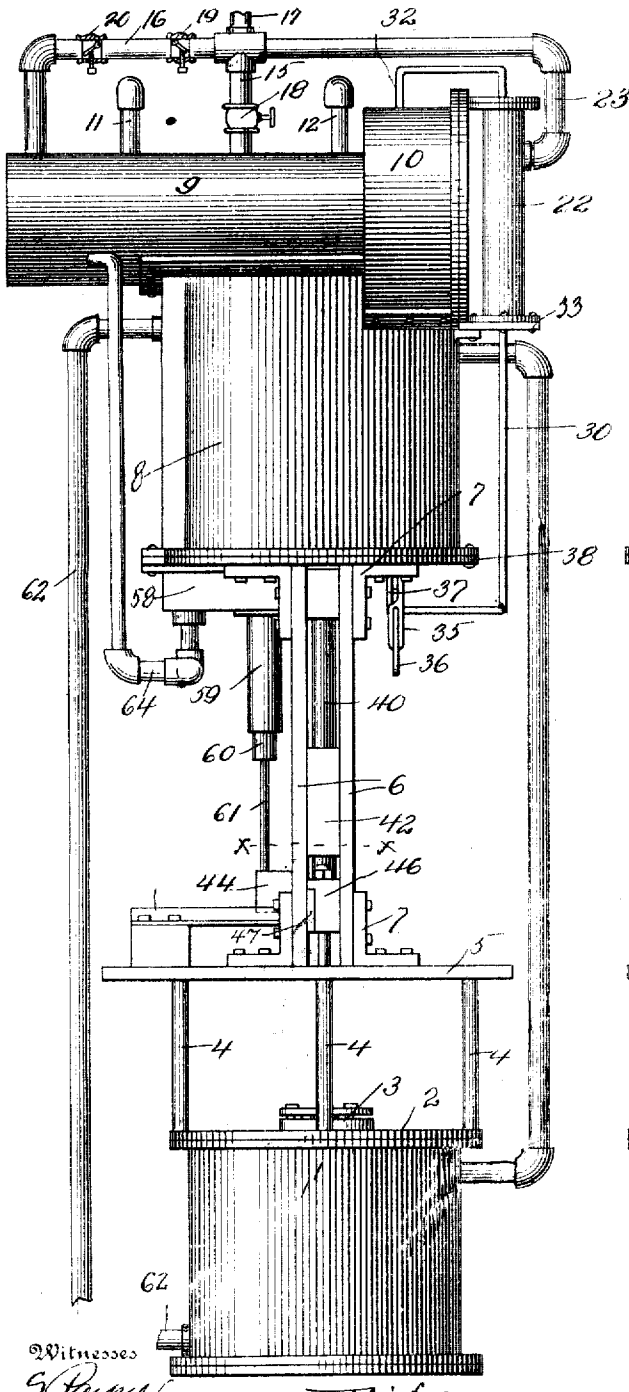


Witnesses

S. Payne.

K. H. Butler

Fig. 1.

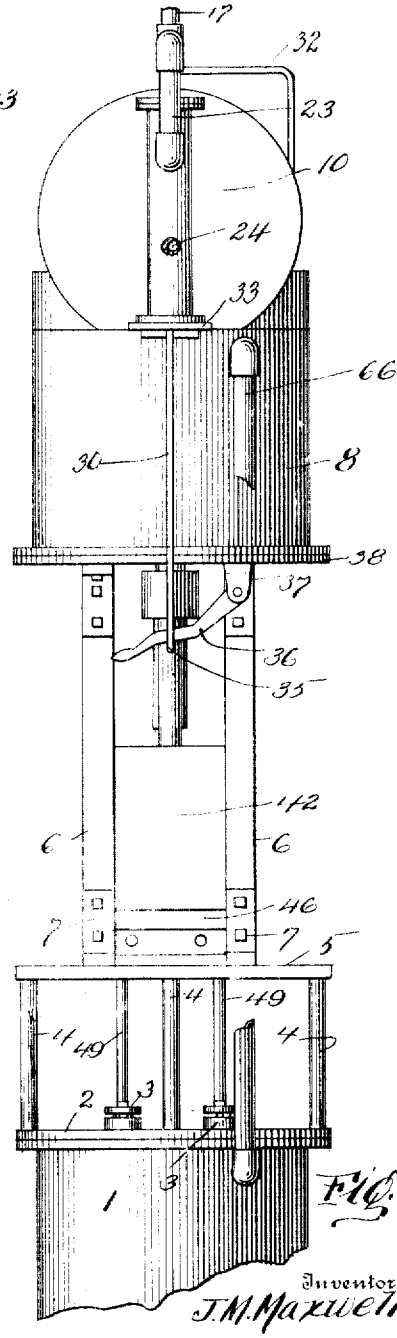


Fig. 2.

Inventor

J. M. Maxwell

By H. C. Evert & Co.

Attorneys

J. M. MAXWELL.

SHEARING MACHINE.

APPLICATION FILED JUNE 22, 1908.

**932,992.**

Patented Aug. 31, 1909.

2 SHEETS—SHEET 2.

Fig. 3.

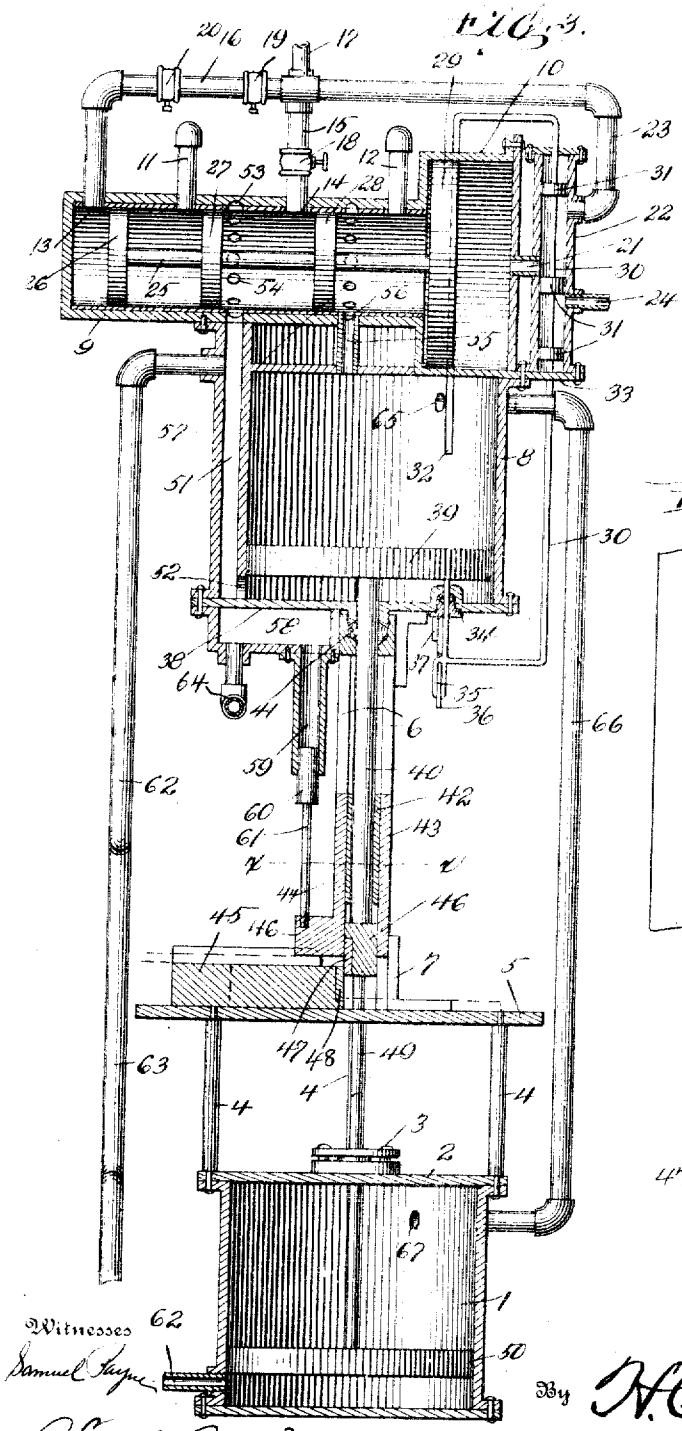

Fig. 4.

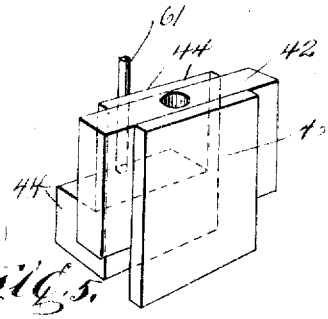

Fig. 5.

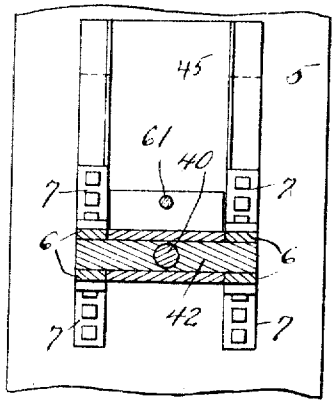

Fig. 6.

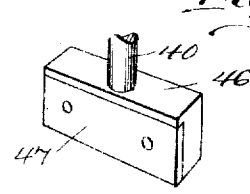

Witnesses

Samuel Payne

R. H. Butler

Inventor

J. M. Maxwell.

By H. C. Evert & Co.

Attorneys

# UNITED STATES PATENT OFFICE.

JAMES M. MAXWELL, OF MOUNT OLIVER BOROUGH, PENNSYLVANIA.

## SHEARING-MACHINE.

932,992. Specification of Letters Patent. Patented Aug. 31, 1909.

Application filed June 22, 1908. Serial No. 439,738.

*To all whom it may concern:*

Be it known that I, JAMES M. MAXWELL, a citizen of the United States of America, residing at Mount Oliver borough, in the county of Allegheny and State of Pennsylvania, have invented certain new and useful Improvements in Shearing-Machines, of which the following is a specification, reference being had therein to the accompanying drawing.

This invention relates to shearing machines, and the primary object of this invention is to provide a shearing machine that will be positive in its action, simple and durable in construction, and free from danger of injury by ordinary use.

Another object of this invention is to provide a shearing machine wherein novel means is employed for holding a piece of work being operated upon, thereby preventing the sheared edge of said piece of work from bending or becoming distorted due to the stresses and strains of the shearing action.

With the above and other objects in view which will more readily appear as the invention is better understood, the same consists in the novel construction, combination and arrangement of parts to be presently described and then specifically pointed out in the appended claims.

In the drawings:—Figure 1 is a side elevation of a shearing machine embodying my invention. Fig. 2 is a front elevation of the same partly broken away. Fig. 3 is a vertical sectional view of the shearing machine partly in elevation, Fig. 4 is a perspective view of a work holding member. Fig. 5 is a horizontal sectional view taken on the line *x*—*x* of Fig. 1, and Fig. 6 is a perspective view of the shearing head.

To put my invention into practice, I provide a main cylinder 1 having a head 2 provided with a stuffing box 3. To the head 2 is secured a plurality of standards 4 for a platform 5, and upon this platform are erected four guides 6, said guides being braced by angle bars 7. The four guides 6 support a vertical auxiliary cylinder 8 and a superposed horizontal cylinder 9, said horizontal cylinder communicating with a large horizontal cylinder 10, both of which are secured to the upper end of the cylinder 8.

The cylinder 9 is provided with exhaust ports 11 and 12 and with inlet ports 13 and 14, said ports communicating by pipes 15 and 16 with a suitable steam supply pipe 17. The pipe 15 is provided with a drilling valve 18, while the pipe 16 is provided with check valves 19 and 20, said check valves being of a conventional form that can be easily regulated to control the passage of steam through the pipe 16 in either direction.

Communicating with the cylinder 10 by a pipe 21 is a vertical reversing cylinder 22, this cylinder connecting by a pipe 23 with the steam supply pipe 17. The cylinder 22 is provided with an exhaust pipe 24. Arranged in the cylinder 9 is a piston rod 25 having pistons 26, 27 and 28 within said cylinder and a piston 29 within the cylinder 10. Extending through the cylinder 22 is a piston rod 30 having pistons 31. The rod 30 extends to one side of the cylinder 10 and down into the cylinder 8, as at 32, while the opposite end of the piston rod 30 extends through the lower head or support 33 of the cylinder 22, and to such a point that the same can be bent inwardly and upwardly through a stuffing box 34 into the cylinder 8, the bend of said rod 30 being formed with a loop 35 through which extends a lever 36 pivotally mounted upon a bracket 37, carried by the lower head 38 of the cylinder 8. (See Figs. 1 and 2.)

In the cylinder 8 is a piston 39 having a piston rod 40 extending through a stuffing box 41 carried by the lower head 38 of said cylinder. The piston rod 40 extends through a work holding member, comprising a block 42 guided between the guides 6. The block 42 is provided with a rear plate 43 and a front plate 44, the latter being adapted to engage a piece of work placed upon the flanged work rest 45 mounted upon the platform 5.

The lower end of the piston rod 40 is provided with a shear head 46 having a shearing blade 47 adapted to act in conjunction with the shearing blade 48, carried by the work rest 45 for shearing a piece of work. Adapted to engage the lower end of the shear head 46 is a piston rod 49, said rod extending through the stuffing box 3 into the cylinder 1, where the end of said rod is provided with a piston head 50.

The cylinder 8 is formed with a bypass 51, said bypass communicating with the lower end of the cylinder 8 by a port 52, and with the cylinder 9 by a circumferentially arranged port 53, and a plurality of circumferentially arranged openings 54. The cyl-

inder 8 is also in communication with the cylinder 9 by means of a passage 55, a circumferentially arranged port 56, and a plurality of circumferentially arranged openings 57. The lower head 38 of the cylinder 8 is provided with a chamber 58, said chamber being provided with a depending cylinder 59 having a piston 60 arranged therein with a depending piston rod 61, said piston rod being connected to the work holding member previously described. The chamber 58 is in communication with the cylinder 9 by a pipe 64. The bypass 51 communicates with the lower end of the cylinder 1 by a pipe 62, said pipe being bent to one side, as at 63 to permit of a piece of work being placed upon the rest 45. The cylinder 8 is provided near its upper end with a port 65 which is connected by a pipe 66 to a port 67 formed in the cylinder 1 near the upper end thereof.

Operation: In Fig. 3 of the drawings, the shearing machine is illustrated as taking steam into the cylinders 9, 10 and 22, and upon the left hand side of the pistons 26 and 28, and upon the right hand side of the piston 29. Since the piston 29 is of a greater area than the pistons 26 and 28, the piston rod 25 will be held in the position shown in Fig. 3, since the piston 29 engages the end of the cylinder 10. The steam entering the cylinder 9 between the pistons 27 and 28 passes through openings 54, port 53 into the bypass 51. From this bypass the steam passes through port 52 into the cylinder 8 beneath the piston 39, and through pipe 62 to the cylinder 1 beneath the piston 50. The steam that is above the piston 39 exhausts through pipe 55, port 56, openings 57 and pipe 12, while the steam above the piston 50 exhausts through port 67, pipe 66, port 65, and exhausts similar to the steam contained in cylinder 8 above the piston 39. Since the steam is being admitted to the lower ends of the cylinders 1 and 8, the upward movement of the pistons 39 and 50 elevates the shear head 46 and causes this head to engage the work holding member, which is also elevated; the steam within the cylinder 59 being forced into the chamber 58 and the pipe connecting therewith. As the piston 39 travels upwardly within the cylinder 8, it strikes the lower end 32 of the piston rod 30, causing this piston rod to elevate the pistons 31, cut off the supply of steam to the cylinder 10 and allow the steam therein to exhaust through pipe 21, cylinder 22 and pipe 24. The pressure of steam against the pistons 26 and 28 then forces the pistons 26, 27, 28 and 29 to the right, and the steam from pipe 15 passes through the opening 57, port 56 and pipe 55 into the cylinder 8, also through port 65, pipe 66 and port 67, causing the pistons 39 and 50 to travel downwardly. The steam from the pipe 16 entering the cylinder 9 passes through pipe 64 into the chamber 58 and the cylinder 59, forcing the piston 60 downwardly and placing the work holding member in positive engagement with a piece of work, while the same is being operated upon. The steam upon the lower sides of the pistons 39 and 50 exhausts through pipes 62, port 52, bypass 51, port 53, openings 54, into the space between pistons 26 and 27, and finally exhausts through pipe 11. Upon the piston 39 striking the lower end of the piston rod 30, the pistons 31 are immediately elevated and the steam from pipe 23 enters the cylinder 10 and reverses the shearing machine, the operation being continuous as long as steam is supplied to the pipe 17. When the shear head 46 descends and shears a piece of material, the work holding member is held in engagement with the material by the steam within the cylinder 59 and the chamber 58, this work holding member being of a sufficient weight, which together with the pressure of steam in the cylinder 59 and the chamber 58 is sufficient to prevent a piece of work from buckling or becoming distorted while being sheared. The adjustable check valves 19 and 20 are employed for regulating the pressure of steam in the end of the cylinder and against the piston 26. The lever 36 is employed, whereby the vertical reciprocating shear head 46 can be retarded in its movement or stopped, this being accomplished by moving the pistons 31 either to admit steam to the cylinder 10 or permit said cylinder to exhaust, according to the direction in which the shear head is moved.

From the foregoing description it will be observed that I have devised a shearing machine wherein the horizontal cylinder 9 and its appurtenant parts constitute a sliding valve and the cylinder 22 and its appurtenant parts a reversing valve, the former controlling the admission and exhaust of steam to and from the cylinders 1 and 8, while the latter controls the operation of the pistons 39 and 50.

While in the drawings forming a part of this application there are illustrated the preferred embodiments of my invention, I desire it to be understood that the elements therein may be varied or changed as to the shape, proportion and exact manner of assemblage without departing from the spirit of the invention.

Having now described my invention what I claim as new, is:—

1. A shearing machine embodying a main cylinder, a platform carried thereby, and vertical guides mounted upon said platform, an auxiliary cylinder supported by said guides, horizontal cylinders supported upon said auxiliary cylinder, a vertical reversing cylinder supported by said auxiliary cylinder, a steam supply pipe communicating with said

horizontal cylinders and with said reversing cylinder, a piston rod mounted in said horizontal cylinders, pistons carried thereby, exhaust pipes carried by said horizontal cylinders, a piston rod arranged in said vertical cylinder and having its ends protruding into said auxiliary cylinder, a piston slidably mounted in said auxiliary cylinder, a piston rod carried thereby, a work holding member slidably mounted between said guides and adapted to be moved by said piston rod, a shear head carried by said piston rod and adapted to engage said work holding member, a work rest arranged upon said platform, a piston slidably mounted in said main cylinder, a piston rod carried thereby, and extending through said platform to engage said shear head, said auxiliary cylinder having a bypass formed therein, a pipe establishing communication between said bypass and the lower end of said main cylinder, a pipe establishing communication between the upper end of said main cylinder and the upper end of said auxiliary cylinder, a steam chamber arranged beneath said auxiliary cylinder and in communication with said main cylinder, a depending cylinder in communication with said chamber, a piston arranged in said cylinder and connecting with said work holding member, one of said horizontal cylinders having circumferentially arranged ports formed therein communicating with said auxiliary cylinder and bypass thereof, said horizontal cylinders having openings formed therein communicating with said ports, controlling valves located upon said steam supply pipe, and a lever pivotally carried by said auxiliary cylinder for moving the piston rod of said reversing cylinder.

2. A shearing machine embodying a main cylinder, a platform carried thereby, and vertical guides mounted upon said platform, an auxiliary cylinder supported by said guides, horizontal cylinders supported upon said auxiliary cylinder, a vertical reversing cylinder supported by said auxiliary cylinder, a steam supply pipe communicating with said horizontal cylinder and with said reversing cylinder, a piston rod mounted in said horizontal cylinders, pistons carried thereby, exhaust pipes carried by said horizontal cylinders, a piston rod arranged in said vertical cylinder and having its ends protruding into said auxiliary cylinder, a piston slidably mounted in said auxiliary cylinder, a piston rod carried thereby, a work holding member slidably mounted between said guides and adapted to be moved by said piston rod, a shear head carried by said piston rod and adapted to engage said work holding member, a work rest arranged upon said platform, a piston slidably mounted in said main cylinder, a piston rod carried thereby, and extending through said platform to engage said shear head, said auxiliary cylinder having a bypass formed therein, a pipe establishing communication between said bypass and the lower end of said main cylinder, a pipe establishing communication between the upper end of said main cylinder and the upper end of said auxiliary cylinder, a steam chamber arranged beneath said auxiliary cylinder and in communication with said main cylinder, a depending cylinder in communication with said chamber, a piston arranged in said cylinder and connecting with said work holding member, one of said horizontal cylinders having circumferentially arranged ports formed therein communicating with said auxiliary cylinder and bypass thereof, said horizontal cylinders having openings formed therein communicating with said ports, and means carried by said auxiliary cylinder for moving the pistons of said reversing cylinder.

3. A shearing machine embodying a main cylinder, a platform carried thereby, an auxiliary cylinder supported above said main cylinder, horizontal cylinders carried by said auxiliary cylinder, a reversing cylinder supported by said auxiliary cylinder, steam supply pipes communicating with said horizontal cylinders and said reversing cylinder, pistons movably mounted in all of said cylinders, a piston rod carried by the piston of said auxiliary cylinder, a shear head carried by said piston rod, a work holding member adapted to be moved by said shear head, a piston rod carried by the piston of said main cylinder and adapted to engage said shear head, said auxiliary cylinder having a bypass formed therein, a pipe establishing communication between said bypass and the lower end of said main cylinder, a pipe establishing communication between the upper ends of said main cylinder and said auxiliary cylinder, one of said horizontal cylinders having ports formed therein for establishing communication between said cylinders, said auxiliary cylinder and the bypass thereof, a depending cylinder supported from said auxiliary cylinder and in communication with said main cylinder, a piston located in said depending cylinder and connecting with said work holding member, means extending into said auxiliary cylinder and adapted to be actuated by the piston thereof for moving the pistons of said reversing cylinder, and means for controlling the admission of steam to said horizontal cylinders.

4. A shearing machine embodying a main cylinder, a platform carried thereby, an auxiliary cylinder supported above said main cylinder, horizontal cylinders carried by said auxiliary cylinder, a reversing cylinder supported by said auxiliary cylinder, steam supply pipes communicating with said horizontal cylinders and said reversing cylinder, pistons movably mounted in all of said cyl-

inders, a piston rod carried by the piston of said auxiliary cylinder, a shear head carried by said piston rod, a work holding member adapted to be moved by said shear head, a piston rod carried by the piston of said main cylinder and adapted to engage said shear head, said auxiliary cylinder having a bypass formed therein, a pipe establishing communication between said bypass and the lower end of said main cylinder, a pipe establishing communication between the said main cylinder and said auxiliary cylinder, one of said horizontal cylinders having ports formed therein for establishing communication between said cylinders, said auxiliary cylinder and the bypass thereof, a depending cylinder supported from said auxiliary cylinder and in communication with said main cylinder, a piston located in said depending cylinder and connecting with said work holding member, and means extending into said auxiliary cylinder and adapted to be actuated by the piston thereof for moving the pistons of said reversing cylinder.

5. A shearing machine comprising a main cylinder, an auxiliary cylinder, horizontal cylinders communicating with said auxiliary cylinder, a reversing cylinder communicating with said horizontal cylinders, steam supply pipes communicating with said horizontal cylinders and with said reversing cylinder, pistons located in all of said cylinders, a shear head actuated by the pistons of said main cylinder and said auxiliary cylinder, a work holding member adapted to be moved by said shear head, said auxiliary cylinder having a bypass formed therein, a pipe establishing communication between said bypass and the lower end of said main cylinder, a pipe establishing communication between the upper end of said main cylinder and said auxiliary cylinder, one of said horizontal cylinders having ports formed therein establishing communication between said steam supply pipes, said auxiliary cylinder and the bypass thereof, a steam chamber in communication with said main cylinder, a depending cylinder in communication with said steam chamber, a piston located therein and connecting with said work holding member, and means protruding into said auxiliary cylinder for moving the pistons of said reversing cylinder.

6. A shearing machine comprising a main cylinder, an auxiliary cylinder, horizontal cylinders, a reversing cylinder, a depending cylinder, pistons located in all of said cylinders, a shear head actuated by the pistons of said main cylinder and said auxiliary cylinder, a work holding member adapted to be moved by said shear head and connecting with the pistons of said depending cylinder, said auxiliary cylinder having a bypass formed therein, one of said horizontal cylinders ports formed therein communicating with said auxiliary cylinder and the bypass thereof, means for establishing communication between said main cylinder, auxiliary cylinder and depending cylinder, and means protruding into said auxiliary cylinder and adapted to be actuated by the piston thereof for moving the pistons of said reversing cylinder.

7. A shearing machine comprising a main cylinder, an auxiliary cylinder, horizontal cylinders, a reversing cylinder, pistons movably mounted in all of said cylinders, a shear head actuated by the pistons of said auxiliary cylinder and said main cylinder, steam supply pipes connecting with said auxiliary cylinders and said reversing cylinder, means for establishing communication between said main cylinder, auxiliary cylinder and horizontal cylinders, and means protruding into said auxiliary cylinder and adapted to be actuated by the piston thereof for moving the pistons of said reversing cylinder.

8. In a shearing machine, a main cylinder, and an auxiliary cylinder, pistons in said cylinders, a shear connected to the rod of the piston in said auxiliary cylinder, a work holding member co-acting with said shear, a sliding valve mechanism controlling the admission and exhaust of fluid to and from the main cylinder and the auxiliary cylinder, and a reversing valve mechanism controlling the operation of the pistons in said main cylinder and auxiliary cylinder.

9. In a shearing machine, a main cylinder, and an auxiliary cylinder, pistons in said cylinders, inlet ports and exhaust ports for said cylinders, a shear connected to the rod of the piston in said auxiliary cylinder, a sliding valve mechanism controlling the admission and exhaust of fluid to and from the main cylinder and the auxiliary cylinder, and a reversing valve mechanism controlling the operation of the pistons in said main cylinder and auxiliary cylinder.

In testimony whereof I affix my signature in the presence of two witnesses.

JAMES M. MAXWELL.

Witnesses:
MAX H. SKOLOVITZ,
K. H. BUTLER.