Sept. 5, 1967 J. I. NUGENT 3,339,785

CLOSURE APPARATUS FOR PRESSURE CHAMBER

Filed June 9, 1965

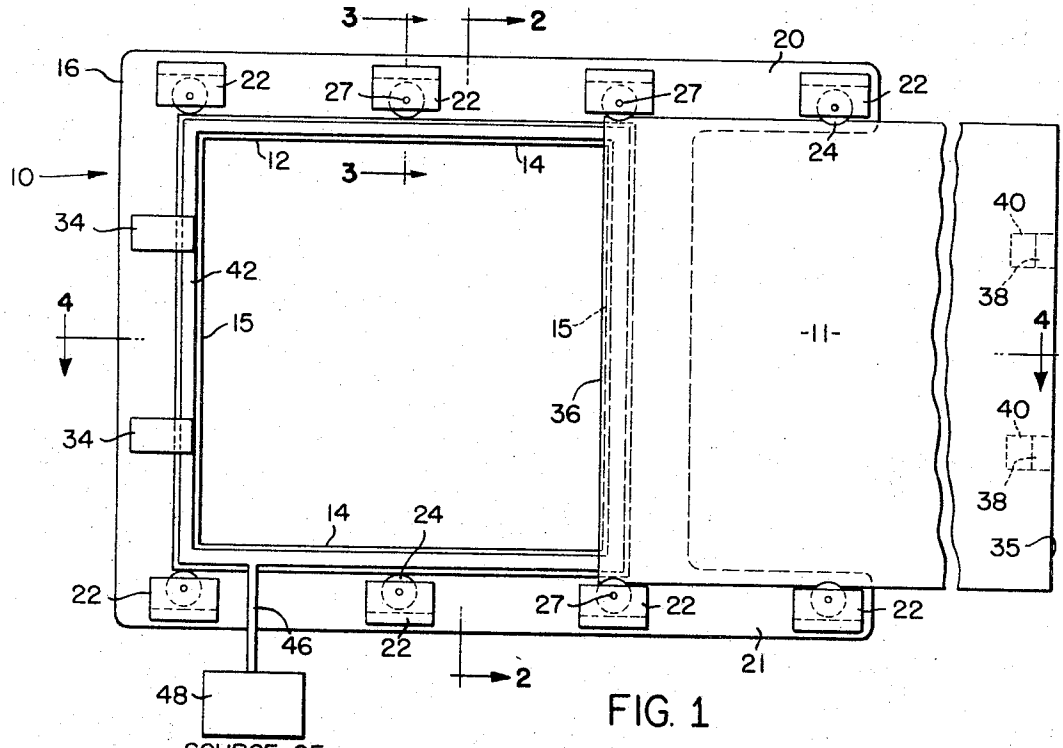

FIG. 1

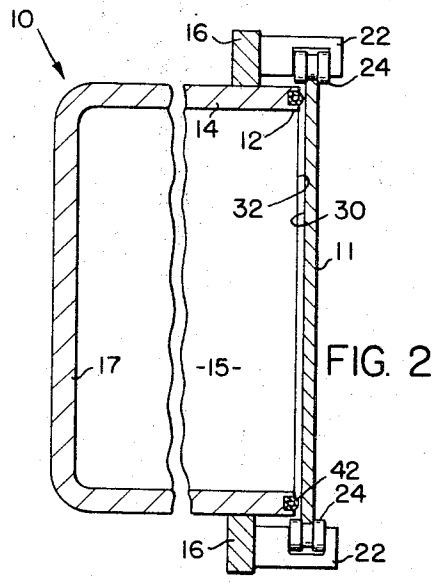

FIG. 2

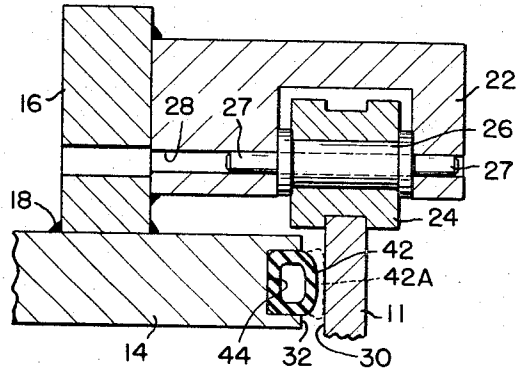

FIG. 3

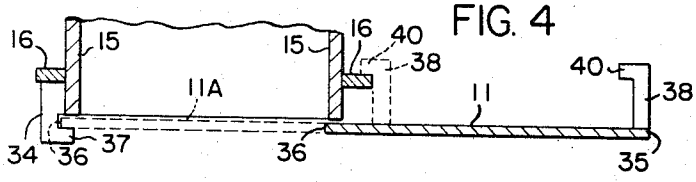

FIG. 4

INVENTOR.
JOHN I. NUGENT
BY Thomson & Thomson
ATTORNEYS

United States Patent Office

3,339,785

Patented Sept. 5, 1967

3,339,785

CLOSURE APPARATUS FOR PRESSURE CHAMBER

John I. Nugent, Rochester, N.Y., assignor, by mesne assignments, to Ritter Pfaudler Corporation, a corporation of New York

Filed June 9, 1965, Ser. No. 462,575
15 Claims. (Cl. 220—41)

ABSTRACT OF THE DISCLOSURE

There is a pressure vessel 14 having an opening 12 surrounded by an inflatable seal 42. A door 11 is slidably supported on a plurality of flanged rollers 24 for movement between open and closed positions respectively between flange stops 34 on the vessel engaging the leading edge of the door 11 and stops 38 mounted on the trailing edge of the door engaging a vessel flange 16, both of which stops also function coactively with the flanged rollers to prevent outward movement of the door away from the vessel.

This invention relates to apparatus for closure and sealing of pressure chambers and more specifically to apparatus for closure and sealing of pressurizable sterilizing chambers.

One object of this invention is to provide improved apparatus for closing and sealing a pressure chamber.

A further object of this invention is to provide an improved door or closure construction for a pressure chamber eliminating the need for conventional locking means for securing the door in closed and sealed relationship with the opening of the pressure vessel.

It is a further object of this invention to provide a greatly simplified, less expensive pressure chamber closure construction.

It is a significant object of this invention to provide a slidable door with means for limiting the outward movement of the door away from the pressure vessel opening when at least in the closed position with the opening.

An important object of this invention is to provide flanged rollers slidably supporting the door or closure member and limiting it from outward movement.

It is another important object of this invention to provide the last described construction in combination with an inflatable seal intermediate the door and the pressure vessel around the opening thereof.

It is another significant object of this invention to provide flanged stop elements extending along the trailing edges of the door adapted to embrace the vessel member when a closed position and flange the stop elements on the vessel adapted to embrace the leading edge of the door when in a closed position coactive with the flanged rollers for limiting outward movement of the door when under pressure.

Other objects and advantages of this invention will be particularly set forth in the claims and will be apparent from the following description, when taken in connection with the accompanying drawings, in which:

FIG. 1 is a front elevational view of one embodiment of this invention;

FIG. 2 is a cross-sectional view of the FIG. 1 embodiment taken along the line 2—2 looking in the direction indicated by the arrows and with parts broken away;

FIG. 3 is an enlarged cross-sectional view taken along the line 3—3 of FIG. 1 looking in the direction indicated by the arrows;

FIG. 4 is a reduced diagrammatic cross-sectional view taken along the line 4—4 of FIG. 1 looking in the direction indicated by the arrows illustrating the door in open and closed positions.

With reference to the figures, there is a horizontally disposed sterilizer or pressure vessel generally indicated by the numeral 10, referred to hereinafter in the claims as a "vessel member." This vessel 10 is constructed according to conventional pressurizable vessels, preferably of all steel construction. There is a door or closure member 11 adapted for closure of a vessel opening 12 defined by continuous integral steel or other rigid horizontal top and bottom walls 14 and vertical sidewalls 15 of the pressure vessel 10. There is a vertical backwall 17 (FIG. 2) generally completing the vessel 10.

Although not illustrated, it will be understood that any of the conventional control systems for supplying steam or other fluid under pressure and/or for reducing pressure are adaptable for use with the pressurizable vessel herein illustrated.

There is a vertical peripheral flange 16 of steel or other rigid material mounted rigidly as for example, by welding 18 (FIG. 3) around the entire outside periphery of the vessel and spaced from an open end 32 of the vessel 10. Flange 16 is provided with a pair of integral vertically spaced horizontal extensions 20 and 21 at the top and bottom of the vessel. The top and bottom portions of the flange including extensions 20 and 21 carry a plurality of steel or other rigid brackets 22 mounted rigidly thereon in spaced relationship longitudinally of the sliding movement of the door and horizontally across those portions of flange 16 and extensions thereof.

Brackets 22 project horizontally from the flange 16 and extensions thereof. Each bracket 22 retains a double flanged roller 24 rotatably mounted thereto, as for example, journaled on the outer race of a roller bearing assembly 26. The roller bearing assembly has a pair of shanks 27 on opposite sides of the inner race thereof. Shanks 27 are journaled into a horizontal bore 28 extending through the bracket 22.

The plurality of brackets 22 mounted above and below the vessel opening 12 are adapted to slidably support and guide the door 11 between open and closed positions respectively illustrated at 11 in solid line in FIG. 4 and 11A in broken line in FIG. 4.

The plurality of flanged rollers 22 also coactively function to limit the outward movement of the door 11 away from the open end 32 of the pressure vessel 10, thereby confining the door to a selected minimal spaced relationship between an inner surface 30 of the door and the open end 32 of the pressure vessel 10. (See FIGS. 2 and 3.)

There are a pair or plurality of rigid flanged stop or clamp elements 34 rigidly mounted along the left-hand vertical portion of the peripheral flange 16 as viewed in FIG. 1. The stop elements 34 are adapted to orient or align the left-hand (as viewed in FIGS. 2 and 4) or leading edge 36 of the door 11 against sliding movement beyond the closed position such as illustrated in FIG. 4. A vertical flange portion 37 of each of the stops 34 forms an internal shoulder with the main body portion of the stops 34. This shoulder is adapted to be engaged

by and to embrace the leading edge **36** of the door **11**.

There are a pair or plurality of rigid flanged stop elements **38** rigidly mounted to the inside surface **30** of the door **11** at substantially the right-hand (as viewed in FIGS. 1 and 4) or trailing edge **35** thereof. Stop elements **38** are similar in construction to the stop elements **34** and are provided with vertical flanges **40**, thereby forming an internal shoulder with the main body portion thereof adapted to embrace or engage the right-hand vertical edge of the peripheral flange **16** as illustrated in broken line at FIG. 4, thereby coacting with the left-hand vessel flanges **34** to align the door **11** in the closed position relative to the vessel opening **12**.

The flanges **37** and **40** of both the left-hand flanged stops **34** and the right-hand flanged stops **38** are coactive with the flanges of rollers **24** to limit, around the entire periphery of the door **11**, the outward movement of the door away from the vessel **10** when in the closed position.

The inside surface **30** of the door **11** is sealed to the open end **32** of the vessel **10** by an inflatable resilient seal **42** seated in the open end **32** of the vessel, thereby to maintain the vessel **10** in pressurized condition, as for example when steam is introduced into the chamber, or to maintain a vacuum in the vessel if the air pressure is reduced. While it will be understood that the inflatable seal **42** could be provided on the door to fulfill these requirements, it is preferable to provide the hollow resilient inflatable seal **42** on the vessel **10** as is illustrated in FIGS. 1–3 around the entire periphery of the opening **12** seated in a peripheral groove or slot **44** in the open end **32** of the vessel walls **14** and **15**.

The resilient inflatable seal **42** may be of the silicon rubber or ethylene propylene type or any other suitable inflatable material which will withstand the high and low external pressure and high temperature of sterilization without rupturing. Preferably the seal **42** is circular in cross-section for passage of fluid and inflation thereof, and is provided with a connection, as for example a conduit **46** (see FIG. 1) communicating between internal fluid passage of the seal and a source of fluid pressure **48**. Although not illustrated, it will be understood that suitable valves and pressure regulators necessary for selectively inflating and deflating the seal **42** are provided. The seal is illustrated in the inflated condition, thereby providing a pressure-sealed pressurizable vessel **10**.

It will be understood from the foregoing description that when it is desired to pressurize the chamber, the operator merely slides the door **11** from the right-hand open position illustrated in FIG. 1 and FIG. 4 to the closed position illustrated in broken line in FIG. 4, and the inflatable seal **42** is inflated to the broken line position **42A** of FIG. 3 thereby to seal the door **11** to the vessel **10** and the chamber is ready for pressurization or depressurization.

While I have shown and described the preferred form of mechanism of my invention it will be apparent that various modifications and changes may be made therein particularly in the form and relation of parts, without departing from the spirit of my invention as set forth in the appended claims.

I claim:

1. An improved apparatus for combination with a pressure vessel member having an opening and a door member for closure of said opening, said improvement comprising in combination therewith:

(a) flanged support means between said members along a pair of opposite edges of said door member adapted for slidably supporting said door member for movement between open and closed positions with said opening and for limiting outward movement of said door member at least when in said closed position, and

(b) flanged means along a second pair of opposite edges for orienting said door against sliding movement beyond closure and limiting outward movement of said door member at least while in said closed position,

(c) seal means between said members for sealing said members in pressure tight relation around said opening when said members are in said closed position.

2. An improved apparatus for combination with a pressure vessel member having an opening and a door member for closure of said opening, said improvement comprising in combination therewith:

(a) flanged support means between said members along a pair of opposite edges of said door member adapted for slidably supporting said door member for movement between open and closed positions with said opening and for limiting outward movement of said door member at least when in said closed position, and

(b) flanged means along a second pair of opposite edges for orienting said door against sliding movement beyond closure and limiting outward movement of said door member at least while in said closed position.

(c) inflatable seal means between said members for sealing said members in pressure tight relation around said opening when said seal is inflated and said members are in said closed position.

3. An improved apparatus for combination with a pressure vessel member having an opening and a door member for closure of said opening, said improvement comprising in combination therewith:

(a) support means between said members adapted for slidably supporting said door member for movement between open and closed positions with said opening, means orienting said door member against sliding movement beyond closure and means along all edges of said door member when in a closed position for limiting outward movement of said door member at least when in said closed position, and

(b) seal means between said members for sealing said members in pressure tight relation around said opening when said members are in said closed position.

4. An improved apparatus for combination with a pressure vessel member having an opening and a door member for closure of said opening, said improvement comprising in combination therewith:

(a) support means between said members adapted for slidably supporting said door member for movement between open and closed positions with said opening, means orienting said door member against sliding movement beyond closure and both said support means and orienting means including means along all edges of said door member for limiting outward movement of said door member at least when in said closed position, and

(b) inflatable seal means between said members for sealing said members in pressure tight relation around said opening when said members are in said closed position.

5. An improved apparatus for combination with a pressure vessel member having an opening and door member for closure of said opening, said improvement comprising in combination therewith:

(a) support means between said members along two opposite edges of said door member adapted for slidably supporting said door member for movement between open and closed positions with said opening and for limiting outward movement of said door member at least when in said closed position, means along a second pair of opposite edges of said door member when in the closed position for limiting outward movement of said door member at least when in said closed position, and

(b) deformable seal means between said members for sealing said members in pressure tight relation around said opening when said members are in said closed position.

6. An improved apparatus for combination with a pressure vessel member having an opening and a door member for closure of said opening, said improvement comprising in combination therewith:

(a) support means between said members along two opposite edges of said door member adapted for slidably supporting said door member for movement between open and closed positions with said opening and for limiting outward movement of said door member at least when in said closed position, means along a second pair of opposite edges of said door member when in the closed position for limiting outward movement of said door member at least when in said closed position, and

(b) inflatable seal means between said members for sealing said members in pressure tight relation around said opening when said members are in said closed position.

7. An improved apparatus for combination with a pressure vessel member having an opening and a door member for closure of said opening, said improvement comprising in combination therewith:

(a) flanged roller means between said members adapted for slidably supporting said door member for movement between open and closed positions with said opening and for limiting outward movement of said door member at least when in said closed position, and

(b) seal means between said members for sealing said members in pressure tight relation around said opening when said members are in said closed position.

8. An improved apparatus for combination with a pressure vessel member having an opening and a door member for closure of said opening, said improvement comprising in combination therewith:

(a) flanged roller means between said members adapted for slidably supporting said door member for movement between open and closed positions with said opening and for limiting outward movement of said door member at least when in said closed position, and

(b) inflatable seal means between said members for sealing said members in pressure tight relation around said opening when said members are in said closed position.

9. An improved apparatus for combination with a pressure vessel member having an opening and a door member for closure of said opening, said improvement comprising in combination therewith:

(a) flanged roller means between said members adapted for slidably supporting said door member for movement between open and closed positions with said opening for limiting outward movement of said door member at least when in said closed position, said roller means extending along two opposite edges of said door as it moves between said positions, and

(b) seal means between said members for sealing said members in pressure tight relation around said opening when said members are in said closed position.

10. An improved apparatus for combination with a pressure vessel member having an opening and a door member for closure of said opening, said improvement comprising in combination therewith:

(a) flanged roller means between said members adapted for slidably supporting said door member for movement between open and closed positions with said opening for limiting outward movement of said door member at least when in said closed position, said roller means extending along two opposite edges of said door as it moves between said positions, and

(b) inflatable seal means between said members for sealing said members in pressure tight relation around said opening when said members are in said closed position.

11. An improved apparatus for combination with a pressure vessel member having an opening and a door member for closure of said opening, said improvement comprising in combination therewith:

(a) flanged roller means between said members adapted for slidably supporting said door member for movement between open and closed positions with said opening, said roller means extending along two opposite edges of said door as it moves between said positions, stop means on said door member extending along a trailing edge of said door member and adapted to embrace a portion of said vessel member when in said closed position, stop means on said vessel member adapted to embrace a leading edge of said door member when in said closed position, both of said stop means being coactive with said flanged roller means for limiting outward movement of said door member at least when in said closed position, and

(b) inflatable seal means between said members for sealing said members in pressure tight relation around said opening when said members are in said closed position.

12. An improved apparatus for combination with a pressure vessel member having an opening and a door member for closure of said opening, said improvement comprising in combination therewith:

(a) flanged support means between said members adapted for slidably supporting said door member for movement between open and closed positions with said opening, said support means extending along two opposite edges of said door as it moves between said positions, means on said door member extending along a trailing edge of said door member and adapted to embrace a portion of said vessel member when in said closed position, means on said vessel member adapted to embrace a leading edge of said door member when in said closed position, both of said last mentioned means being coactive with said flanged support means for limiting outward movement of said door member at least when in said closed position, and

(b) inflatable seal means between said members for sealing said members in pressure tight relation around said opening when said members are in said closed position.

13. An improved apparatus for combination with a pressure vessel member having an opening and a door member for closure of said opening, said improvement comprising in combination therewith:

(a) roller means between said members adapted for slidably supporting said door member for movement between open and closed positions with said opening and for limiting outward movement of said door member at least when in said closed position, and

(b) seal means between said members for sealing said members in pressure tight relation around said opening when said members are in said closed position.

14. An improved apparatus for combination with a pressure vessel member having an opening and a door member for closure of said opening, said improvement comprising in combination therewith:

(a) roller means between said members adapted for slidably supporting said door member for movement between open and closed positions with said opening, means along all edges of said door member when in said closed position for limting outward movement of said door member at least when in said closed position, and

(b) inflatable seal means between said members for sealing said members in pressure tight relation around said opening when said members are in said closed position.

15. An improved apparatus for combination with a pressure vessel member having an opening and a door member for closure of said opening, said improvement comprising in combination therewith:

(a) flanged roller means between said members adapted for slidably supporting said door member for movement between open and closed positions with said opening, means along all edges of said door member when in said closed position for limiting outward movement of said door member at least when in said closed position, and

(b) inflatable seal means between said members for

sealing said members in pressure tight relation around said opening when said members are in said closed position.

References Cited

UNITED STATES PATENTS

2,330,220	9/1943	Kemper	220—46
3,198,159	8/1965	Cherney et al.	220—46

THERON E. CONDON, *Primary Examiner.*

G. T. HALL, *Assistant Examiner.*