(12) INTERNATIONAL APPLICATION PUBLISHED UNDER THE PATENT COOPERATION TREATY (PCT)

(19) World Intellectual Property Organization
International Bureau

(43) International Publication Date
21 June 2012 (21.06.2012)

WIPO | PCT

(10) International Publication Number
WO 2012/082850 A2

(51) International Patent Classification:
B25C 1/00 (2006.01) *B25C 1/04* (2006.01)

(21) International Application Number:
PCT/US2011/064824

(22) International Filing Date:
14 December 2011 (14.12.2011)

(25) Filing Language: English

(26) Publication Language: English

(30) Priority Data:
102010054507.4 14 December 2010 (14.12.2010) DE

(71) Applicant *(for all designated States except US)*: **ILLINOIS TOOL WORKS INC.** [US/US]; 3600 West Lake Avenue, Glenview, Illinois 60026 (US).

(72) Inventor; and
(75) Inventor/Applicant *(for US only)*: **HÄHNDEL, Olaf** [DE/DE]; Hornfeld 6, 30982 Plattensen (DE).

(74) Agent: **HAUPTMAN, Benjamin J.**; 1700 Diagonal Road, Suite 300, Alexandria, Virginia 22314 (US).

(81) Designated States *(unless otherwise indicated, for every kind of national protection available)*: AE, AG, AL, AM, AO, AT, AU, AZ, BA, BB, BG, BH, BR, BW, BY, BZ, CA, CH, CL, CN, CO, CR, CU, CZ, DE, DK, DM, DO, DZ, EC, EE, EG, ES, FI, GB, GD, GE, GH, GM, GT, HN, HR, HU, ID, IL, IN, IS, JP, KE, KG, KM, KN, KP, KR, KZ, LA, LC, LK, LR, LS, LT, LU, LY, MA, MD, ME, MG, MK, MN, MW, MX, MY, MZ, NA, NG, NI, NO, NZ, OM, PE, PG, PH, PL, PT, QA, RO, RS, RU, RW, SC, SD, SE, SG, SK, SL, SM, ST, SV, SY, TH, TJ, TM, TN, TR, TT, TZ, UA, UG, US, UZ, VC, VN, ZA, ZM, ZW.

(84) Designated States *(unless otherwise indicated, for every kind of regional protection available)*: ARIPO (BW, GH, GM, KE, LR, LS, MW, MZ, NA, RW, SD, SL, SZ, TZ, UG, ZM, ZW), Eurasian (AM, AZ, BY, KG, KZ, MD, RU, TJ, TM), European (AL, AT, BE, BG, CH, CY, CZ, DE, DK, EE, ES, FI, FR, GB, GR, HR, HU, IE, IS, IT, LT, LU, LV, MC, MK, MT, NL, NO, PL, PT, RO, RS, SE, SI, SK, SM, TR), OAPI (BF, BJ, CF, CG, CI, CM, GA, GN, GQ, GW, ML, MR, NE, SN, TD, TG).

Published:

— *without international search report and to be republished upon receipt of that report (Rule 48.2(g))*

(54) **Title**: DRIVING TOOL FOR DRIVING IN FASTENERS ON A CARTRIDGE BELT

(57) **Abstract**: The invention relates to a driving tool for driving in fasteners (1) on a cartridge belt (4), in particular nails or staples, in driving cycles out of a driving channel (2), wherein a driving cycle is combined with a conveying cycle for the cartridge belt (4) along a conveying path, wherein a mechanical cartridge belt limit switch (8) is provided which senses at a sensing point (9) in the conveying path whether the cartridge belt (4) is present, wherein, after the cartridge belt is no longer present at the sensing point (9) following a conveying cycle, the cartridge belt limit switch (8) initiates the deactivation of the driving tool. It is proposed that, after the cartridge belt is no longer present at the sensing point (9), the cartridge belt limit switch (8) can still carry out a last driving cycle or a last group of driving cycles, and the deactivation of the driving tool is initiated only after the last driving cycle or the last group of driving cycles has been completed.

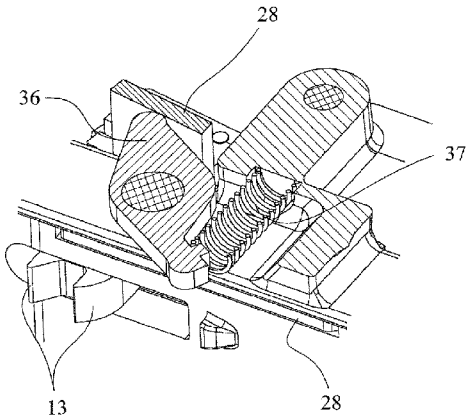

Fig. 2b

WO 2012/082850 A2

Driving tool for driving in fasteners on a cartridge belt

The present invention relates to a driving tool for driving fasteners on a cartridge belt into workpieces as claimed in the pre-characterizing clause of claim 1, and to a method for driving in fasteners on a cartridge belt as claimed in the pre-characterizing clause of claim 16.

The driving tool in question is used especially as a hand tool in the construction industry, for example for fastening particle boards to support structures. In principle, the driving device in question can also be associated with an automatic positioning unit such as a robot, as part of an automated manufacturing process.

The driving tool can here be a "pushing" driving tool or a "shooting" driving tool. The present invention can be applied to both types of driving tool.

The term "fastener" should be understood in the broadest sense and includes screws, pins or the like in addition to nails and staples. The focus here is on the driving in of nails but this should not be understood as implying any limitation.

The fasteners are here provided grouped together as a cartridge belt. Depending on the design, the cartridge belt can have a plastic or metal support belt that carries the individual fasteners. Another alternative embodiment consists in providing a row of parallel fastening wires that are attached to the individual fasteners. The important thing here is that in the present case the cartridge belt comprises both the fasteners and the respective support medium.

Depending on the design of the driving tool, the cartridge belt can be a cartridge strip or a wound-up cartridge coil. In the case of nailing tools, the tool is then accordingly either a so-called strip nailer or a so-called coil nailer.

In the case of the known driving tools, a driving cycle is generally combined with a conveying cycle for the cartridge belt along a conveying path so that manual "loading" is not necessary before or after a driving cycle.

In a very general fashion, it is desirable to avoid unloaded driving cycles, i.e. driving cycles with no fasteners. One of the reasons for this is that an unloaded driving cycle has a negative effect on the lifetime of the respective drive means for driving the fasteners in. Another is that in many applications the respective workpiece is also pressed in at the driving point by an unloaded driving cycle in

such a way that the user can wrongly conclude that a fastener has actually been driven in. This can create problems in terms of product liability. The above pressing-in of the workpiece at the driving point can also result in later, undesired penetration of moisture into the workpiece.

A known coil nailer (EP 1 648 662 B1), on which the present invention is based, is equipped with a mechanical cartridge belt limit switch that senses in the driving channel whether there is a nail in the driving channel. The driving channel is the channel out of which the respective fastener, the nail in this case, is driven into the workpiece.

If there are no nails in the driving channel, the cartridge belt limit switch initiates the deactivation of the driving tool. The deactivation here means that a workpiece contact, which is depressed in normal operation when the driving tool is placed against the workpiece, is blocked, preventing a further driving cycle from being carried out.

A disadvantage of the known driving tool is that the sensing of the fastener in the driving channel is only possible with very specific fasteners. There is also a risk that the fastener could get caught in the driving channel so there is a likelihood of limited operational safety in certain applications.

The object of the invention is to design and develop the known driving tool in such a way that there is greater flexibility in its application at the same time as increased operational safety.

The above object is achieved, in the case of a driving tool as claimed in the pre-characterizing clause of claim 1, by the features of the characterizing part of claim 1.

The essential thing is the realization that, in the context of the cartridge belt limit switch, sensing cannot be carried out in the driving channel but instead upstream of the driving channel with respect to the conveying direction, as long as, after a cartridge belt is no longer present at the sensing point, the cartridge belt limit switch still allows a last driving cycle or a last group of driving cycles to be carried out. Only after the last driving cycle or the last group of driving cycles has been completed does the cartridge belt limit switch then initiate the deactivation of the driving tool.

The inventive step of the invention therefore consists in providing the sensing point of the cartridge belt limit switch at a point in the conveying path that is remote from the driving channel, wherein it must be ensured that the last fastener remaining in the cartridge belt or the last conveying means remaining in the cartridge belt can be driven in. By virtue of the abovementioned shifting of the scanning point, the restrictive structural constraints at the sensing point which are known from the prior art no longer exist. The sensing can to a large extent be carried out universally on a wide variety of fasteners without affecting the resulting operational safety.

It should be pointed out that the sensing whether a sensing point is occupied by the cartridge belt means that it is determined whether the cartridge belt is or is not present. Sensing of the fasteners on the cartridge belt itself or sensing of the conveying belt can be provided here. The focus is here preferably on the sensing of the conveying belt, it being assumed that the cartridge belt is fully loaded with fasteners, i.e. as far as the last occupied position.

In the particularly preferred embodiments in claims 5 and 6, it is provided that the driving tool is deactivated by blocking the depression of the workpiece contact, wherein in one alternative embodiment the blocking is effected by a toothed rack between the workpiece contact and a blocking lever. Such a toothed rack makes it possible to block in a simple fashion the depressed workpiece contact at different depths. The basic idea of equipping the driving tool with an abovementioned blocking toothed rack is also claimable, as will be explained.

Claim 8 acknowledges that the conveying drive means for the cartridge belt can be used in a simple fashion to implement the above-proposed “delayed” deactivation of the driving tool after a cartridge belt is no longer present at the sensing point. This dual purpose of the conveying drive means results in a particularly compact structure.

The particularly preferred embodiments in claims 9 to 14 concern the concept of designing the cartridge belt limit switch in the manner of a mechanical memory that can be placed in a reset mode, a preset mode and a set mode. Normally, i.e. when there is a cartridge belt at the sensing point, the cartridge belt limit switch always remains in the reset mode so that driving cycles and conveying cycles can take place unaffected. When a cartridge belt is no longer present at the sensing

point, this causes the cartridge belt limit switch to be transferred into the preset mode, following which a subsequent conveying cycle causes the transition of the cartridge belt limit switch into the set mode, which in turn is combined with the deactivation of the driving tool.

The cartridge belt limit switch as it were "notices" that a cartridge belt is no longer present at the sensing point and deactivates the driving tool only with the next conveying cycle. As this conveying cycle is always combined with a driving cycle, it is ensured that the last fastener can be driven in.

According to a further teaching in claim 16, which has an independent meaning, a method for driving in fasteners on a cartridge belt is claimed, based on the abovedescribed proposed functioning of the driving tool. Reference should be made to the embodiments which are suitable for describing the method.

It should also be pointed out that a driving tool as such is claimable, wherein a cartridge belt limit switch and a blocking device are provided for blocking the depression of the workpiece contact by the cartridge belt limit switch, and wherein the blocking device provides an abovementioned toothed rack for the blocking engagement, and wherein a "delayed" deactivation of the driving tool in the above sense does not necessarily need to be provided. Reference should be made to all relevant embodiments.

The invention is explained in detail below with the aid of drawings, showing just one exemplary embodiment, in which:

Figure 1a shows a proposed driving tool in a front view,
Figure 1b shows the driving tool in Figure 1a in a view from behind,
Figure 2a shows a perspective view of the tool nose of the driving tool in Figure 1a in the disassembled state with the door open,
Figure 2b shows a view in cross-section of the tool nose in Figure 2a along the line of section IIb-IIb,
Figure 2c shows a view in cross-section of the tool nose in Figure 2a along the line of section IIc-IIc,
Figure 3 shows a view in cross-section of the tool nose in Figure 2c along the line of section III-III with the blocking device actuated (set mode),
Figure 4a shows a view in cross-section of the driving tool in Figure 3 along the line of section IV-IV in reset mode,

Figure 4b shows the view in Figure 4a in preset mode,
Figure 4c shows the view in Figure 4a in set mode,
Figure 5a shows a perspective view of the coupling carriage for the cartridge belt limit switch with other components disassembled, and
Figure 5b shows a perspective view of the conveying drive means with other components disassembled.

The driving tool shown in the drawings serves to drive in fasteners 1 on a cartridge belt 4, in particular nails, staples or the like. Reference should be made to the introductory part of the description for the wide scope of the term "fastener". In what follows, the focus is on driving in nails, which should not be understood as limiting. All statements relating to nails apply correspondingly to all other types of fastener which can be driven in.

The fasteners 1 are driven out of a driving channel 2 into a workpiece 3 which is to be nailed, in driving cycles. A driving piston is usually used to drive the nails in. However, the detail of the driving itself is not relevant for the proposed solution.

A driving cycle is usually combined with a conveying cycle for the cartridge belt 4 along a conveying path. The cartridge belt 4 is conveyed along the conveying path to the driving channel 2 in a conveying direction 5.

The cartridge belt 4 is here preferably a coil cartridge belt, wound up in a coil cartridge, that comprises a support belt 7 and the fasteners 1 themselves. All of the alternatives mentioned in the introductory part of the description can also be applied to the design of the cartridge belt 4.

In the exemplary embodiment shown, the driving tool takes the form of a hand tool and has a conventional structure. It is, however, also conceivable that the driving tool can be applied in conjunction with an automatic positioning unit such as a robot or the like.

In the driving tool shown, the fasteners 1 are "shot" and not "pushed" into the workpiece 3. However, the speed at which the nail enters the workpiece is not significant for the proposed solution.

The driving tool is equipped with a mechanical cartridge belt limit switch 8 that, as will be explained, senses at a sensing point 9 (Figure 2c) whether there is a

cartridge belt 4 in the conveying path. After a cartridge belt is no longer present at the sensing point 9, following a conveying cycle, the cartridge belt limit switch 8 initiates the deactivation of the driving tool.

A conveying cycle thus comprises the feeding of the cartridge belt 4 preferably by precisely one cartridge place equipped with a fastener 1. Thus the driving of the fastener 1a shown in Figure 2c, with the subsequent conveying cycle, results in the cartridge belt 4 no longer being present at the sensing point 9.

In order to ensure that in this situation the last fastener 1b can also be driven in and hence used, it is provided according to the invention that the cartridge belt limit switch 8 still allows a last driving cycle to be carried out after a cartridge belt is no longer present at the sensing point 9. Only after this last driving cycle has been completed is the deactivation of the driving tool, which is still to be explained, initiated.

In the exemplary embodiment shown, the proposed solution enables the sensing point 9 to be positioned at a distance from the driving channel 2 which corresponds exactly to the feed travel of a conveying cycle.

It is, however, also conceivable to provide the sensing point 9 at a greater distance from the driving channel 2. The delay in the deactivation of the driving tool can then be made even greater. In this case it is provided that the cartridge belt limit switch 8 still allows a last group of driving cycles to be carried out after a cartridge belt is no longer present at the sensing point 9, wherein the deactivation of the driving tool is initiated only after completion of the last predetermined group of driving cycles. The sensing point 9 is advantageously placed along the conveying path such that all fasteners 1 of the respective cartridge belt 4 are driven in after the abovementioned last driving cycle or the abovementioned last group of driving cycles has been carried out.

It has already been pointed out that details of the structural implementation of the driving cycles are not relevant here. Purely for the sake of completeness, it should be pointed out that an in particular pneumatic drive means 10 is provided for driving in the fasteners 1, wherein a driving cycle here preferably results from a back-and-forth movement of a driving piston.

It is, however, fundamentally important here that an in particular pneumatic conveying drive means 11 is provided for conveying the fasteners 1 to the driving channel 2, wherein a conveying cycle here preferably results from a back-and-forth movement of a conveying piston 12. In a particularly preferred embodiment, a conveying cycle is combined with a back-and-forth movement of a driver 13 in the conveying path, which with each conveying cycle comes into conveying engagement with the respective next section of the cartridge belt 4. The design of the driver 13 can be well understood, for example, by viewing Figures 2a and 4a. The driver 13 engages in recesses 7a in the support belt 7 and in a conveying cycle first executes a movement to the right in Figure 4a so that it comes into engagement with the next section of the cartridge belt 4, i.e. with the next recess 7a of the support belt 7. During this movement of the driver 13, a catch 14 (only indicated in Figure 2a) ensures that the cartridge belt 4 cannot follow the movement of the driver 13. The driver 13 then executes a return movement to the left in Figure 4a, which causes a conveying movement of the cartridge belt 4 to the left in Figure 4a.

It can also be seen from the view in Figure 4a that the driver 13 is a constituent of an extension arm 15 of the conveying piston 12 so that the back-and-forth movement of the driver 13 is effected by the conveying piston 12.

The driving tool shown is, in a manner known per se, equipped with a workpiece contact 16 which is here preferably designed so that it can be displaced in the direction in which the driving channel 2 extends. The workpiece contact 16 is spring-tensioned and is depressed when the driving tool is placed on the workpiece 3 in such a way that the opening 17 of the driving channel 2 has a predetermined distance (which can here be adjusted) from the surface of the workpiece.

The spring tensioning and the adjustability can be clearly understood from the above detailed view in Figure 1b. The workpiece contact 16 engages via a retaining plate 18 with a thread 19 which is pretensioned downwards by the spring 20 which is only indicated in Figure 1b. The maximum depth by which the contact can be depressed furthermore results from the construction shown in the above detailed description of Figure 1b. The possibility of adjusting the gap between the opening 17 of the driving channel 2 and the surface of the workpiece here preferably is a result of the thread 19 being rotatable about its axis by means of the actuating wheel 21. This adjustability plays an important role in the proposed solution in a way which will be explained later.

Moreover, the driving tool shown is equipped with a conventional, in particular pneumatic actuating element 22, here preferably an actuating trigger 22, for the user to initiate a driving cycle. The actuating element 22 is here coupled to the workpiece contact 16 in such a way that a driving cycle can be initiated by the actuating element 22 only when the workpiece contact 16 is depressed. This is an effective safety function to prevent a fastener 1 from being accidentally "shot out".

Now it is interesting, in a preferred alternative embodiment, for the deactivation of the driving tool initiated by the cartridge belt limit switch 8 to be achieved by blocking the depression of the workpiece contact 16 by means of an actuatable blocking device 23 (Figure 3). Here use is made of the fact that a further driving cycle is not possible without depression of the workpiece contact 16. As the workpiece contact 16 is readily accessible, it can also easily be implemented structurally, as becomes clear from the following explanations.

In a particularly preferred embodiment, the blocking device 23 is associated with a toothed rack 24 for blocking engagement, wherein the toothed rack 24 extends at least on one side over a region along the direction 16a in which the workpiece contact 16 is depressed, so that the workpiece contact 16 can be blocked at different depressed depths. The toothed rack 24 can be seen best by comparing Figures 1b and 3. In a particularly preferred embodiment, the toothed rack 24 is designed in such a way that, when the blocking device 23 is actuated, it is ensured that the workpiece contact 16 rebounds in a rebound direction 16b which is opposite to the depression direction 16a. The toothed rack 24 here preferably consists of two sawtooth segments associated with each other.

Figure 3 shows that the blocking device 23 has an actuatable blocking lever 25 which, in the actuated state shown in Figure 3, comes or can be brought into blocking engagement with a blocking section 26 of the workpiece contact 16. The blocking lever 25 is thus pretensioned, here preferably in the direction of the unactuated position.

The blocking lever 25 can be pretensioned in different ways. In the preferred embodiment shown in Figure 3, a leaf spring 27 is provided for the pretensioning, which is or can be brought into engagement with the blocking lever 25.

Any type of positive or non-positive connection between the blocking lever 25 and the blocking section 26 is in principle conceivable. The blockability is here preferably achieved by the abovementioned toothed rack, namely by corresponding tooth geometries on the blocking lever 25, on one hand, and on the blocking section 26 of the workpiece contact 16, on the other hand.

The cartridge belt limit switch 8 is here advantageously coupled to the conveying drive means 11 in such a way that, when the cartridge belt is no longer present at the sensing point 9, a subsequent conveying cycle causes the deactivation of the driving tool, here preferably the blocking of the depression of the workpiece contact 16 by means of the blocking device 23. The conveying drive means 11 thus has a dual purpose, namely to convey the cartridge belt 4, on the one hand, and to deactivate the driving tool, on the other hand.

In detail, the cartridge belt limit switch 8 preferably takes the form of a mechanical memory and can be brought into a reset mode (Figure 4a), a preset mode (Figure 4b) and a set mode (Figure 4c). This design as a mechanical memory allows the delayed deactivation of the driving tool explained above.

In the reset mode shown in Figure 4a, a conveying cycle has no effect on the cartridge belt limit switch 8 and on the blocking device 23. In the preset mode shown in Figure 4b, a conveying cycle causes the transfer of the cartridge belt limit switch 8 into the set mode. In the set mode shown in Figure 4c, the cartridge belt limit switch 8 in turn causes the deactivation of the driving tool, here the blocking of the depression of the workpiece contact 16 by means of the blocking device 23.

When there is a cartridge belt at the sensing point 9, the cartridge belt limit switch 8 is always in reset mode. Immediately after there is no longer a cartridge belt present, the cartridge belt limit switch 8 is again in preset mode.

It is essential for the construction shown that the cartridge belt limit switch 8 has a control lever 28 which can here preferably pivot about a control lever axis 28a and can be brought into a reset mode (solid lines in Figure 2c), into a preset mode (not shown), and into a set mode (dashed lines in Figure 2c). The preset mode lies between the reset mode and the set mode, to be precise preferably next to the reset mode, as will become clear.

The control lever 28 is spring-loaded into the conveying path by means of a spring 29. Moreover, the control lever 28 is equipped with a sensing nose 30 for the cartridge belt 4, by means of which the control lever 28 presses against the cartridge belt 4 in the situation shown in solid lines in Figure 2c, whereby the control lever 28 is held in reset mode. To clarify things, it must be pointed out that the control lever 28 is not designed to be level and instead has a whole series of different deformations, as also will become clear.

In normal operation, in other words when fasteners 1 are driven in in a normal fashion, the control lever 28 moves from the reset mode to the preset mode when the cartridge belt is no longer present at the sensing point 9, which is here associated with a very slight pivoting movement of the control lever 28 to the left in Figure 2c.

Now it is essential that the control lever 28 has a control lever coupling element 31, and that the conveying drive means 11, here the conveying piston 12, has a corresponding conveying drive means coupling element 32. In the reset mode shown in Figure 4a, the two coupling elements 31, 32 and hence the control lever 28 and the conveying drive means 11, here the conveying piston 12, are always disengaged so that the cartridge belt limit switch 8 has no effect on the operation of the driving tool.

In the preset mode shown in Figure 4b, the sensing nose 30 of the control lever 28 is not supported by the cartridge belt 4 at the sensing point 9, so that the control lever 28, driven by the spring 29, moves towards the set mode but is blocked in the preset mode by the conveying drive means coupling element 32. Adjusting the conveying drive means 11, here a movement of the conveying piston 12 to the right in Figure 4b, releases the control lever coupling element 31 as part of a conveying cycle in the direction of the set mode, so that the control lever 28 ultimately reaches the set mode shown in Figure 4c, which is indicated in dashed lines in Figure 2c.

Further adjustment of the conveying drive means 11 as part of the conveying cycle, here the return movement of the conveying piston 12 to the left in Figure 4c, ultimately causes the blocking device 23 to be actuated by the control lever coupling element 31.

Figure 3 shows that the control lever coupling element 31 hereby acts on the leaf spring 27 of the blocking lever 25, pushing it to the right in Figure 3. For this purpose, the control lever coupling element 31 preferably takes the form of a coupling carriage so that in the set mode the blocking device 23 can be actuated by means of the conveying drive means 11, in this case by means of the conveying piston 12, via the control lever coupling element 31, displacing the latter in the carriage guide. The coupling carriage is here preferably pretensioned by means of a coupling spring 33 into the undeflected position.

Because the conveying drive means 11 is pretensioned by means of the spring 34 into its initial position, which here corresponds to a pretensioning of the conveying piston 12 in the direction of the return movement, the actuation of the blocking device 23 is maintained for the time being by the pretensioning of the conveying drive means 11.

The transition of the cartridge belt limit switch 8 back into the reset mode is here achieved in a particularly interesting structural manner. The door 35 is used for this purpose and delimits at least a part of the conveying path situated upstream from the driving channel 2 and which needs to be opened in order to insert the cartridge belt 4. It is particularly important here that an opening lever 36 is provided which can be seen from viewing Figures 2a and 2b. The opening lever 36 is pretensioned to the right in Figure 2b by means of an opening lever spring 37 and is coupled or can be coupled to the door 35, on the one hand, and the control lever 28, on the other hand, in such a way that the opening lever 36 transfers the control lever 28 into the reset mode when the door 35 is opened. This means that the force of the opening lever spring 37 must exceed that of the control lever spring 29. This solution is particularly appropriate as, after the driving tool has been deactivated by the cartridge belt limit switch 8, the user will intuitively open the door 35 to reload the cartridge belt 4. The cartridge belt limit switch 8 is then automatically transferred into the reset mode. When the door 35 is subsequently closed, the sensing nose 30 of the control lever 28 rests again on the cartridge belt 4 so that the normal driving of the fasteners 1 can take place.

For greater understanding, reference should also be made to Figure 5a which shows the control lever coupling element 31 more or less separately from the other components. It can also be seen here that the carriage guide 31a of the control lever coupling element 31 is oriented substantially perpendicular to the control lever axis

28a. The movement of the carriage is here indicated by the reference numeral 38, and the pivoting of the control lever 28 by the reference numeral 39.

Figure 5b shows, also in a view more or less separate from the other components, the conveying drive means 11 with the conveying drive means coupling element 32, which is arranged on the extension arm 15 of the conveying piston 12.

According to a further teaching, which also has independent meaning, a method is claimed for driving in fasteners 1 on a cartridge belt in driving cycles by means of a driving tool, in particular a driving tool as described above. Here, as explained above, a driving cycle is combined with a conveying cycle for the cartridge belt 4 along a conveying path, wherein a sensing point 9 in the conveying path senses the presence of the cartridge belt 4 and wherein, after the cartridge belt is no longer present at the sensing point 9 following a conveying cycle, deactivation of the driving tool is initiated.

An essential part of this further teaching is that, after the cartridge belt is no longer present at the sensing point 9, a last driving cycle or a last group of driving cycles can be carried out, and the deactivation of the driving tool is initiated only after the last driving cycle or the last group of driving cycles has been completed.

For an explanation of possible embodiments of the proposed method, reference should be made to all of the above explanations of the proposed driving tool.

Patent Claims

1. A driving tool for driving in fasteners (1) on a cartridge belt (4), in particular nails or staples, in driving cycles out of a driving channel (2), wherein a driving cycle is combined with a conveying cycle for the cartridge belt (4) along a conveying path, wherein a mechanical cartridge belt limit switch (8) is provided which senses at a sensing point (9) in the conveying path whether the cartridge belt (4) is present, wherein, after the cartridge belt is no longer present at the sensing point (9) following a conveying cycle, the cartridge belt limit switch (8) initiates the deactivation of the driving tool,
characterized in that
after the cartridge belt is no longer present at the sensing point (9), the cartridge belt limit switch (8) can still carry out a last driving cycle or a last group of driving cycles, and the deactivation of the driving tool is initiated only after the last driving cycle or the last group of driving cycles has been completed.

2. The driving tool as claimed in claim 1, characterized in that an in particular pneumatic conveying drive means (11) is provided for conveying the fasteners (1) to the driving channel (2), preferably in that a conveying cycle results from a back-and-forth movement of a driving piston (12).

3. The driving tool as claimed in claim 1 or 2, characterized in that a conveying cycle is combined with a back-and-forth movement of a driver (13) in the conveying path, which with each conveying cycle comes into conveying engagement with the respective next section of the cartridge belt (4).

4. The driving tool as claimed in one of the preceding claims, characterized in that a workpiece contact (16), which in particular can be displaced in the direction in which the driving channel (2) extends, is provided, which workpiece contact (16) is depressed when the driving tool is placed on the respective workpiece (3) in such a way that the opening (17) of the driving channel (2) has a predetermined distance (which can in particular be adjusted) from the surface of the workpiece, preferably in that an in particular pneumatic actuating element (22), in particular an actuating trigger (22), is provided for the user to initiate a driving cycle, and in that

the actuating element (22) is coupled to the workpiece contact (16) in such a way that a driving cycle can be initiated by the actuating element (22) only when the workpiece contact (16) is depressed.

5. The driving tool as claimed in claim 4, characterized in that the deactivation of the driving tool initiated by the cartridge belt limit switch (8) is achieved by blocking the depression of the workpiece contact (16) by means of an actuatable blocking device (23).

6. The driving tool as claimed in claim 5, characterized in that the blocking device (23) is associated with a toothed rack (24) for blocking engagement, and in that the toothed rack (24) extends at least on one side over a region along the direction (16a) in which the workpiece contact (16) is depressed, so that the workpiece contact (16) can be blocked at different depressed depths, preferably in that the toothed rack (24) is designed such that, when the blocking device (23) is actuated, it is possible for the workpiece contact (16) to rebound.

7. The driving tool as claimed in claim 5 or 6, characterized in that the blocking device (23) has an actuatable, in particular pretensioned, blocking lever (25) which, in the actuated state, comes or can be brought into blocking engagement with a blocking section (26) of the workpiece contact (16), and in that the toothed rack (24) is formed by corresponding tooth geometries on the blocking lever (25), on one hand, and on the blocking section (26) of the workpiece contact (16), on the other hand.

8. The driving tool as claimed in one of the preceding claims, characterized in that the cartridge belt limit switch (8) is coupled to the conveying drive means (11) in such a way that, when the cartridge belt is no longer present at the sensing point (9), a subsequent conveying cycle causes the deactivation of the driving tool, in particular the blocking of the depression of the workpiece contact (16) by means of the blocking device (23).

9. The driving tool as claimed in one of the preceding claims, characterized in that the cartridge belt limit switch (8) can be brought into a reset mode, a preset mode and a set mode, in that, in the reset mode, a conveying cycle has no effect on the cartridge belt limit switch (8) and on the blocking device (23) which may be present, in that, in the preset mode, a conveying

cycle causes the transfer of the cartridge belt limit switch (8) into the set mode, and in that, in the set mode, the cartridge belt limit switch (8) causes the deactivation of the driving tool, in particular the blocking of the depression of the workpiece contact (16) by means of the blocking device (23).

10. The driving tool as claimed in claim 9, characterized in that the cartridge belt limit switch (8) is in the reset mode when the cartridge belt is present at the sensing point (9), and is in the preset mode immediately after the cartridge belt is no longer present at the sensing point (9).

11. The driving tool as claimed in claim 9 and possibly claim 10, characterized in that the cartridge belt limit switch (8) has an in particular pivotable control lever (28) which can accordingly be brought into a reset mode, into a preset mode, and into a set mode, preferably in that the control lever (28) is spring-loaded into the conveying path, and has a sensing nose (30) for the cartridge belt (4), and in that, in normal operation, the control lever (28) moves from the reset mode to the preset mode when the cartridge belt is no longer present at the sensing point (9).

12. The driving tool as claimed in claim 11, characterized in that the control lever (28) has a control lever coupling element (31), and the conveying drive means (11), in particular the conveying piston (12), has a corresponding conveying drive means coupling element (32), and in that, in the preset mode, the conveying drive means coupling element (32) blocks the control lever (28) in the preset mode via the control lever coupling element (31), and in that adjusting the conveying drive means (11), in particular moving forward the conveying piston (12), releases the control lever coupling element (31) as part of a conveying cycle in the direction of the set mode, and preferably in that further adjustment of the conveying drive means (11) as part of the conveying cycle, in particular the return movement of the conveying piston (12), causes actuation of the blocking device (23) by the control lever coupling element (31).

13. The driving tool as claimed in claim 12, characterized in that the control lever coupling element (31) takes the form of a coupling carriage, so that, in the set mode, the blocking device (23) can be actuated by means of the

conveying drive means (11) via the control lever coupling element (31), displacing the latter in the carriage guide.

14. The driving tool as claimed in claim 11 and possibly claim 12 or 13, characterized in that the control lever (28) is pretensioned in the set mode, bears against an adjusting part (32) of the conveying drive means (11) in the preset mode, and moves into the set mode as a result of the movement of the conveying drive means (11) in the course of a conveying cycle.

15. The driving tool as claimed in one of the preceding claims, characterized in that at least a part of the conveying path situated upstream from the driving channel (2) is delimited by a door (35) which can be opened in order to insert a cartridge belt (4), and in that an opening lever (36) is provided which is pretensioned and is coupled to the door (35), on the one hand, and the control lever (28), on the other hand, in such a way that the opening lever (36) transfers the control lever (28) into the reset mode when the door (35) is opened.

16. A method for driving in fasteners (1) on a cartridge belt (4), in particular nails or staples, in driving cycles by means of a driving tool, wherein a driving cycle is combined with a conveying cycle for the cartridge belt (4) along a conveying path, wherein a sensing point (9) in the conveying path senses whether the cartridge belt (4) is present, wherein, after the cartridge belt is no longer present at the sensing point (9) following a conveying cycle, deactivation of the driving tool is initiated,
characterized in that
after the cartridge belt is no longer present at the sensing point (9), a last driving cycle or a last group of driving cycles can be carried out, and the deactivation of the driving tool is initiated only after the last driving cycle or the last group of driving cycles has been completed.

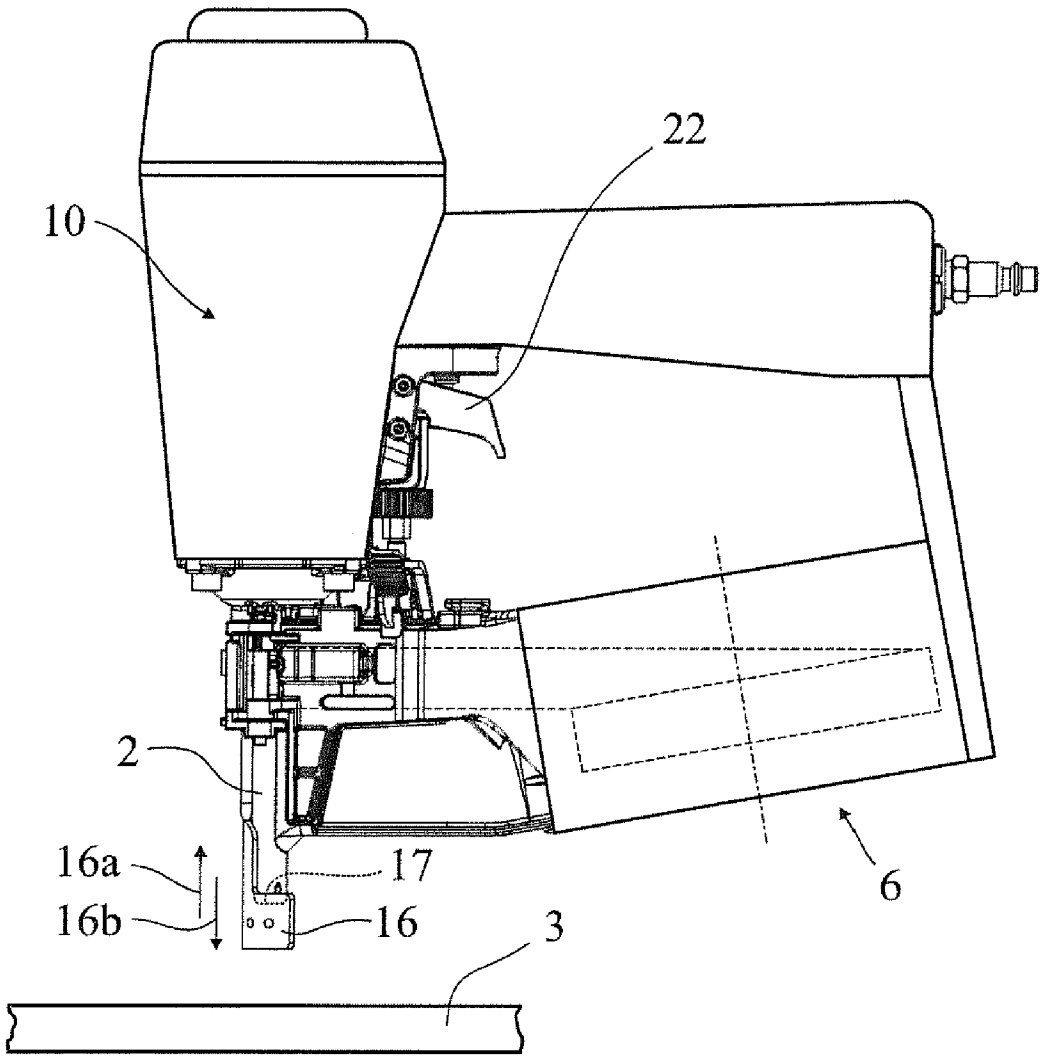

Fig. 1a

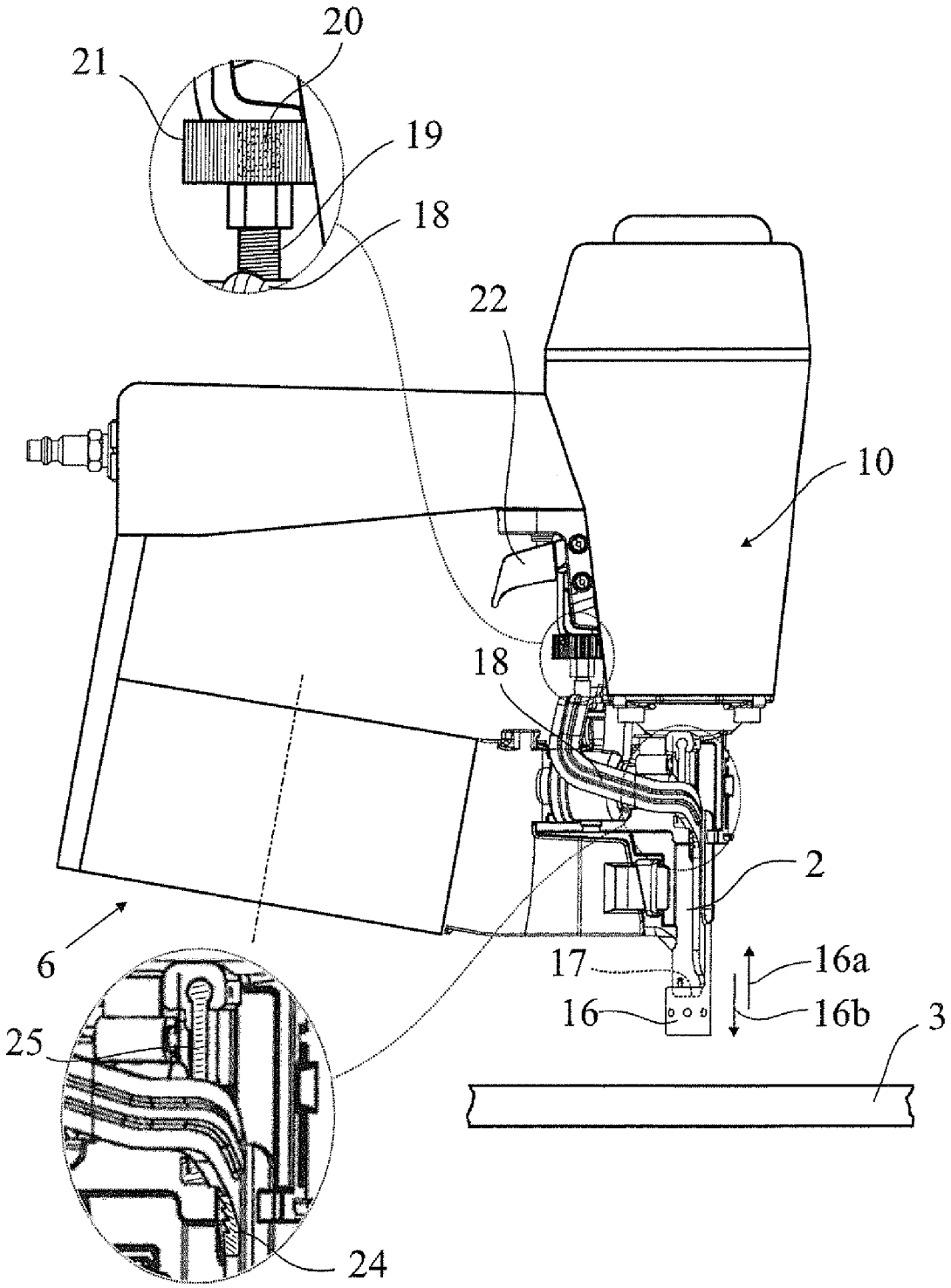

Fig. 1b

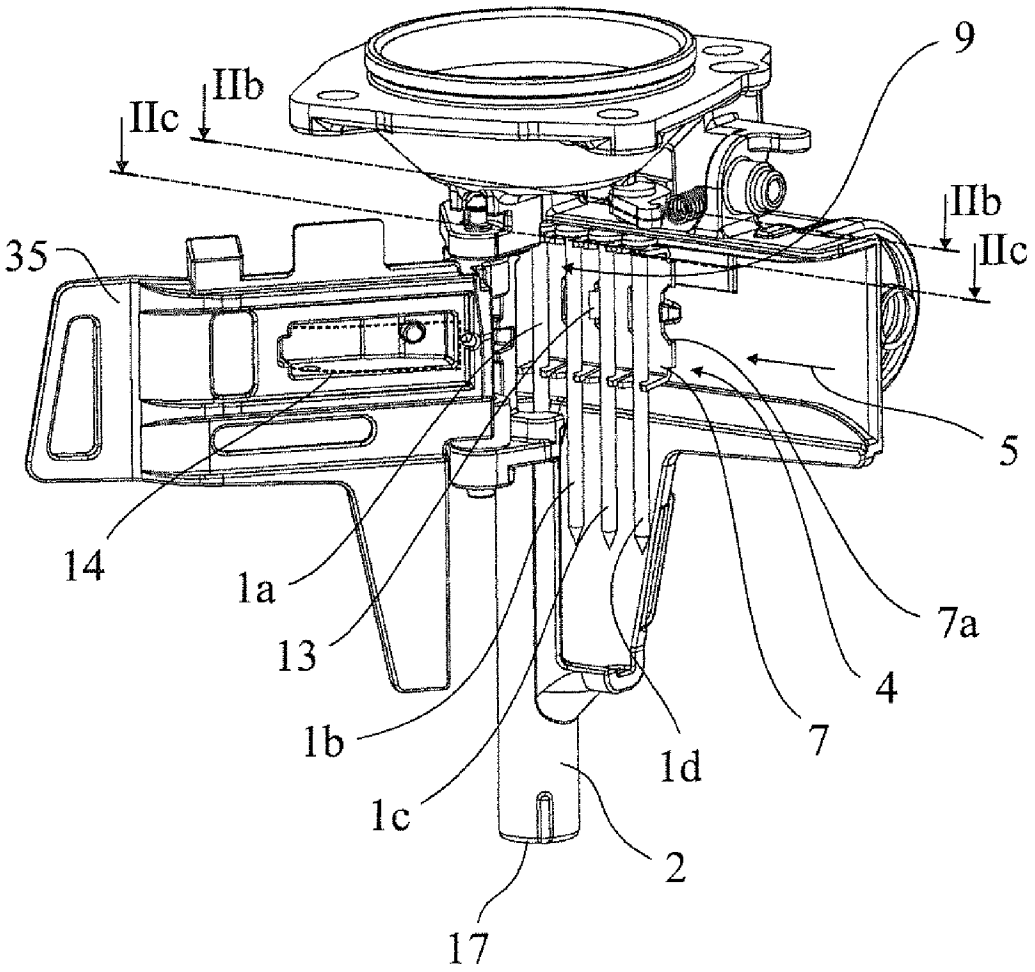

Fig. 2a

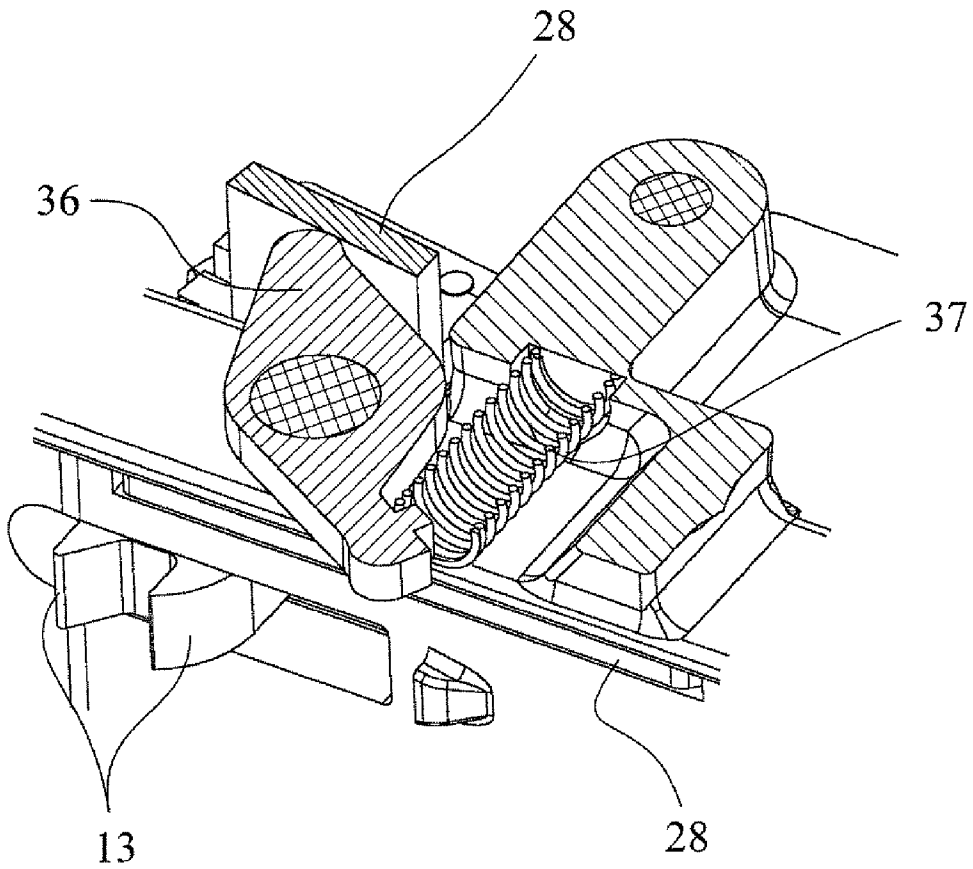

Fig. 2b

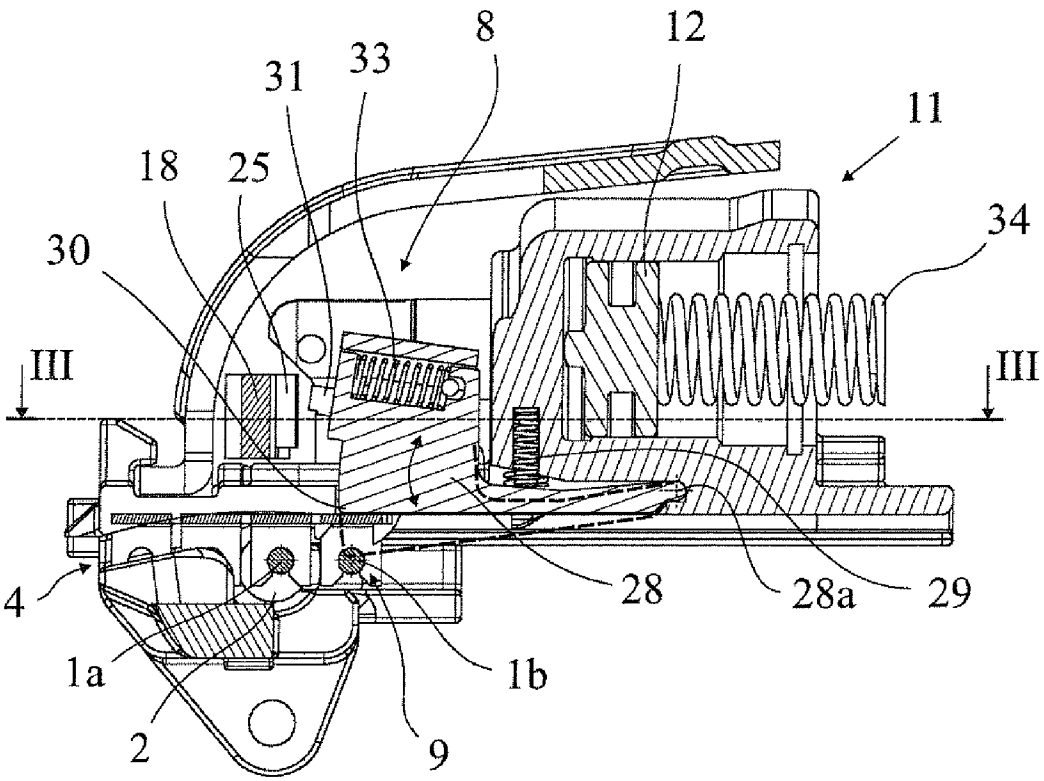

Fig. 2c

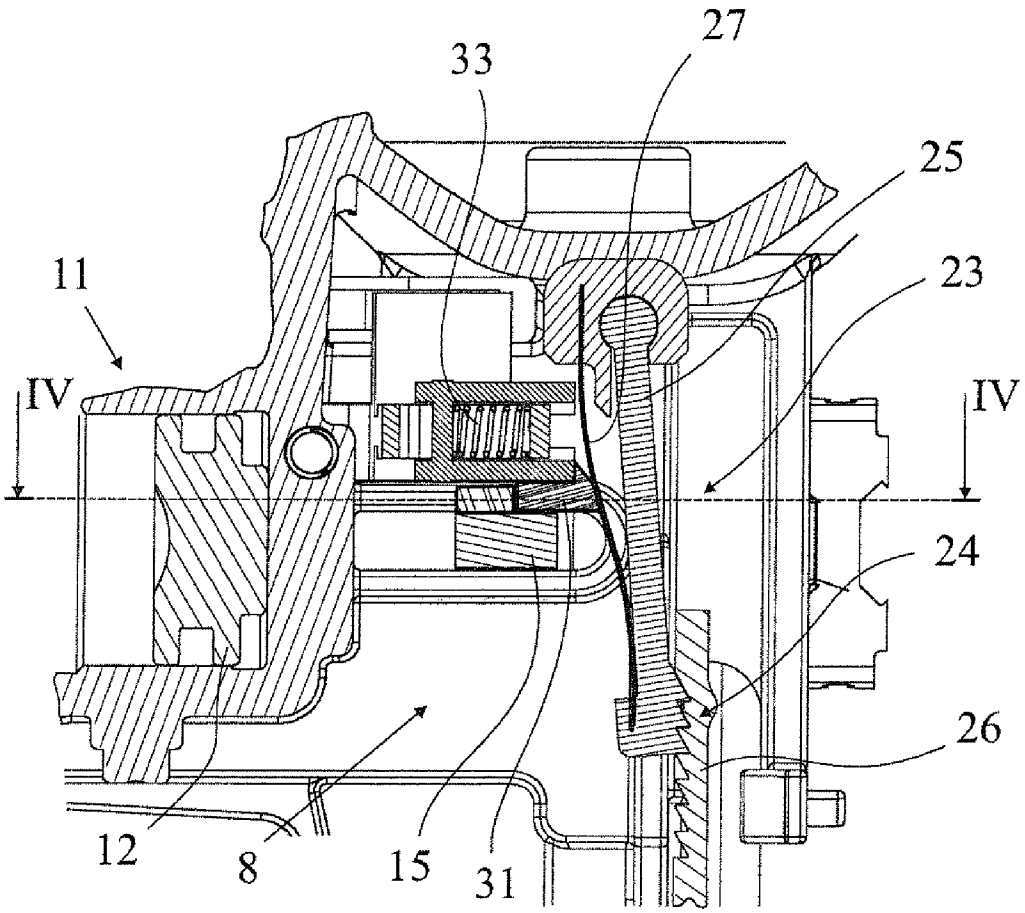

Fig. 3

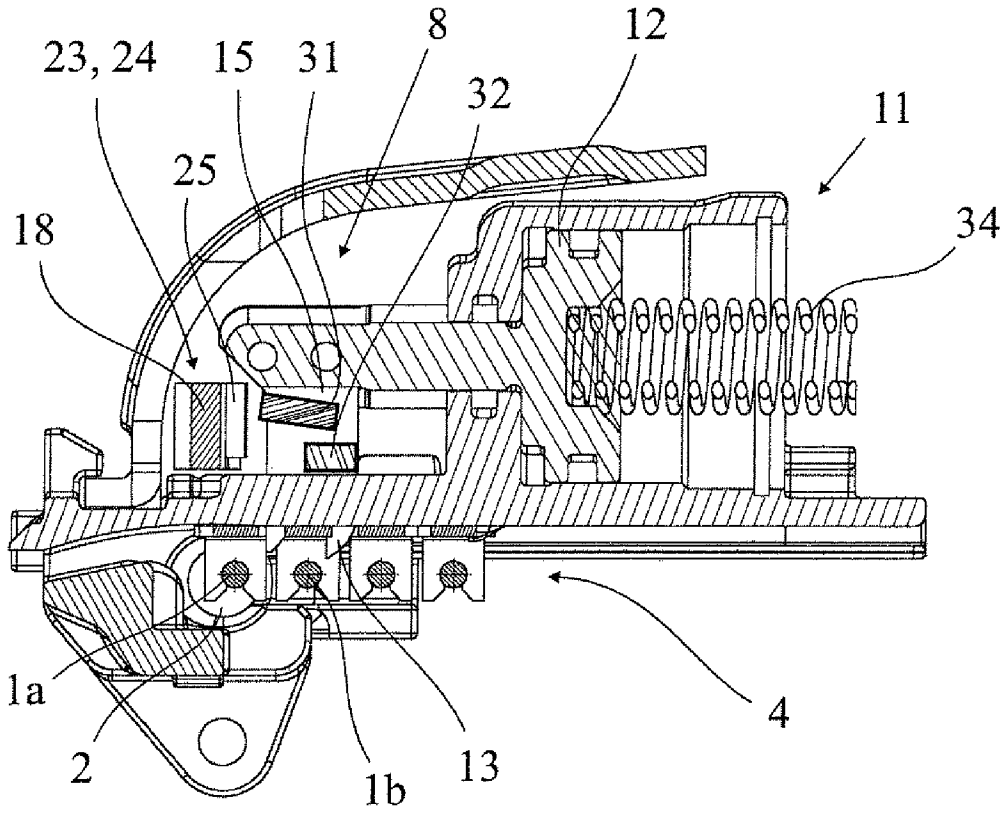

Fig. 4a

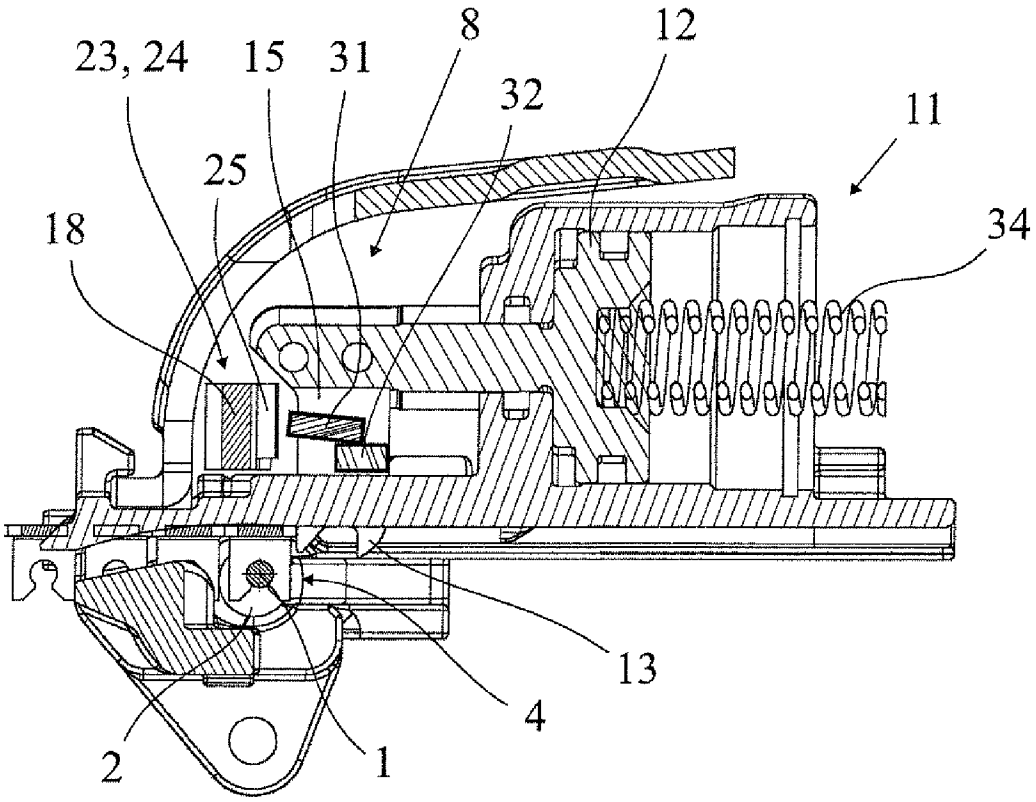

Fig. 4b

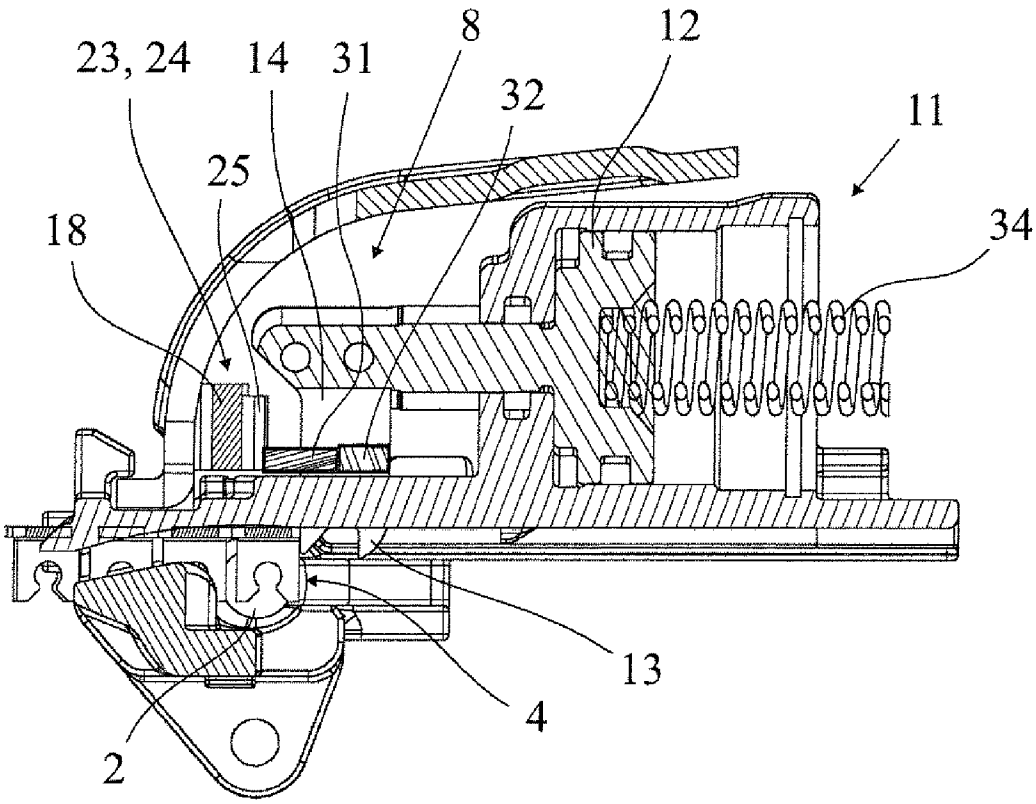

Fig. 4c

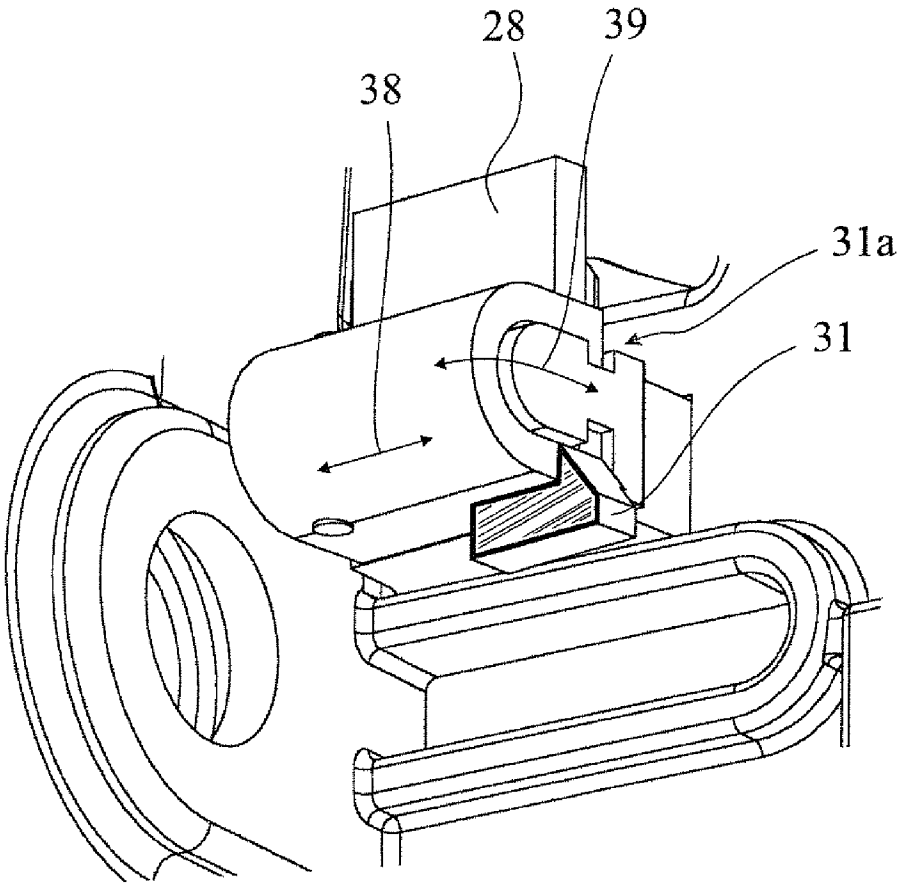

Fig. 5a

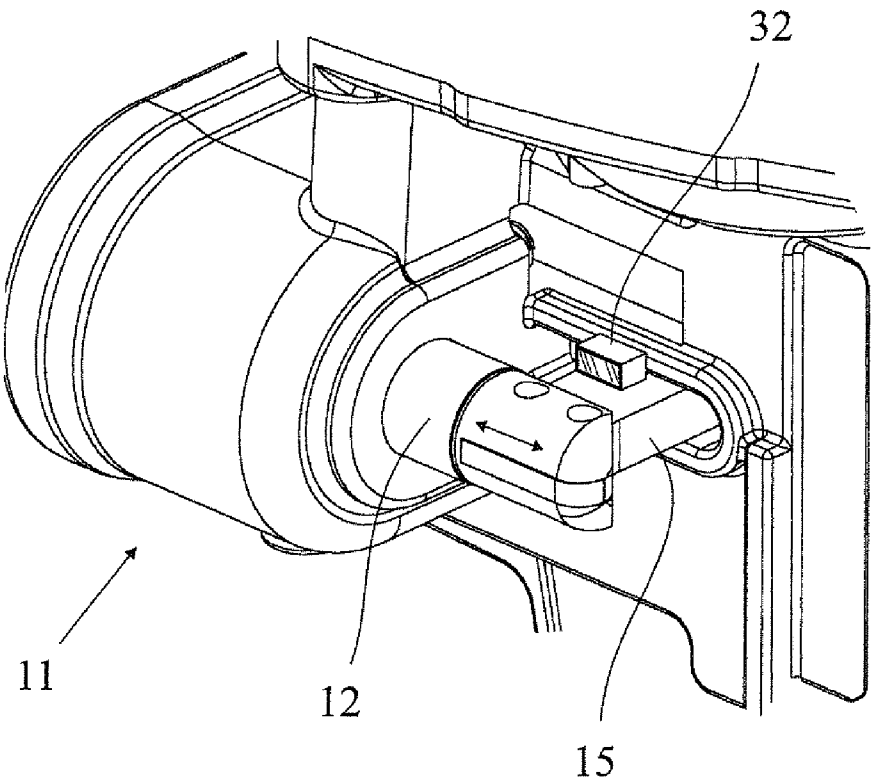

Fig. 5b