Nov. 26, 1940. H. ALLEMANN 2,222,893

SOLID FUEL BURNING FURNACE

Filed Nov. 18, 1936 2 Sheets-Sheet 1

Fig. 1.

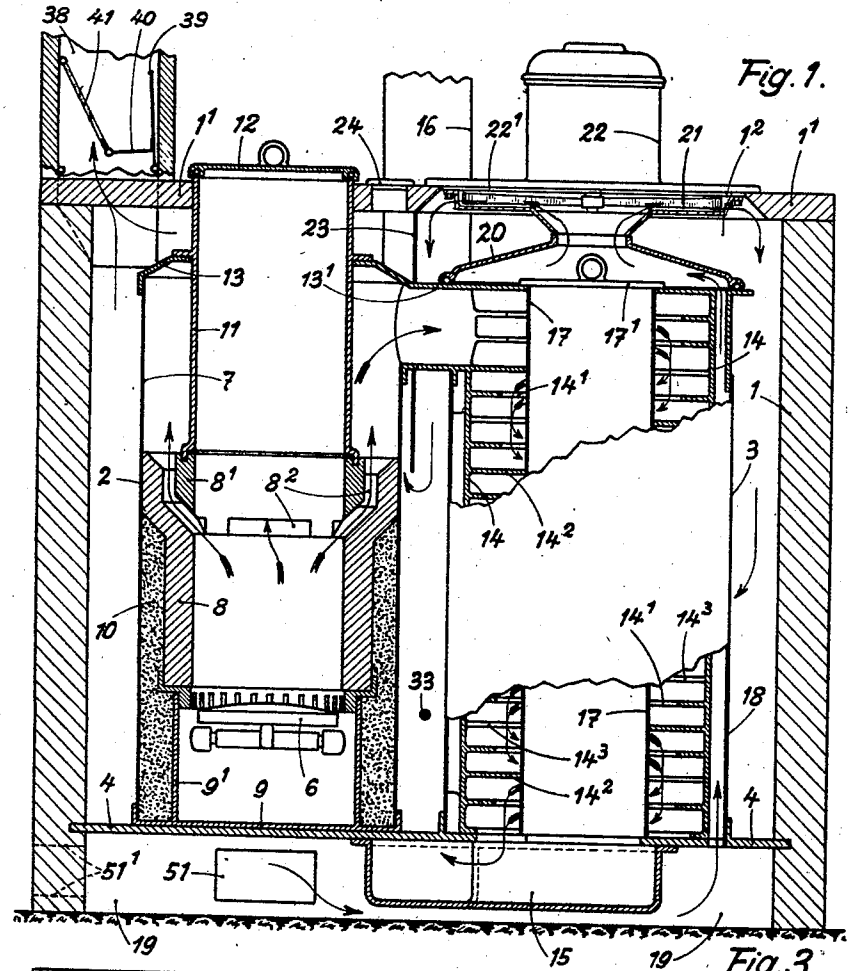

Fig. 3.

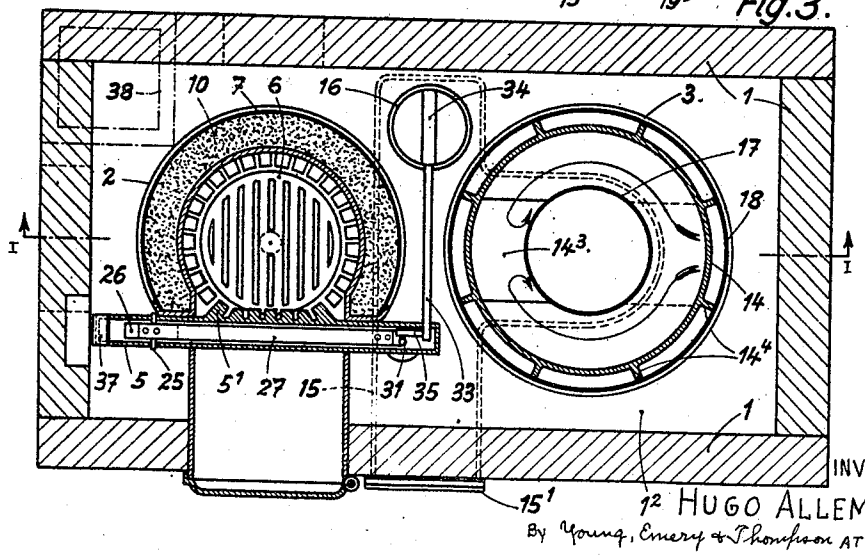

INVENTOR
HUGO ALLEMANN
By Young, Emery & Thompson ATTORNEYS

Nov. 26, 1940. H. ALLEMANN 2,222,893

SOLID FUEL BURNING FURNACE

Filed Nov. 18, 1936 2 Sheets-Sheet 2

Fig. 2.

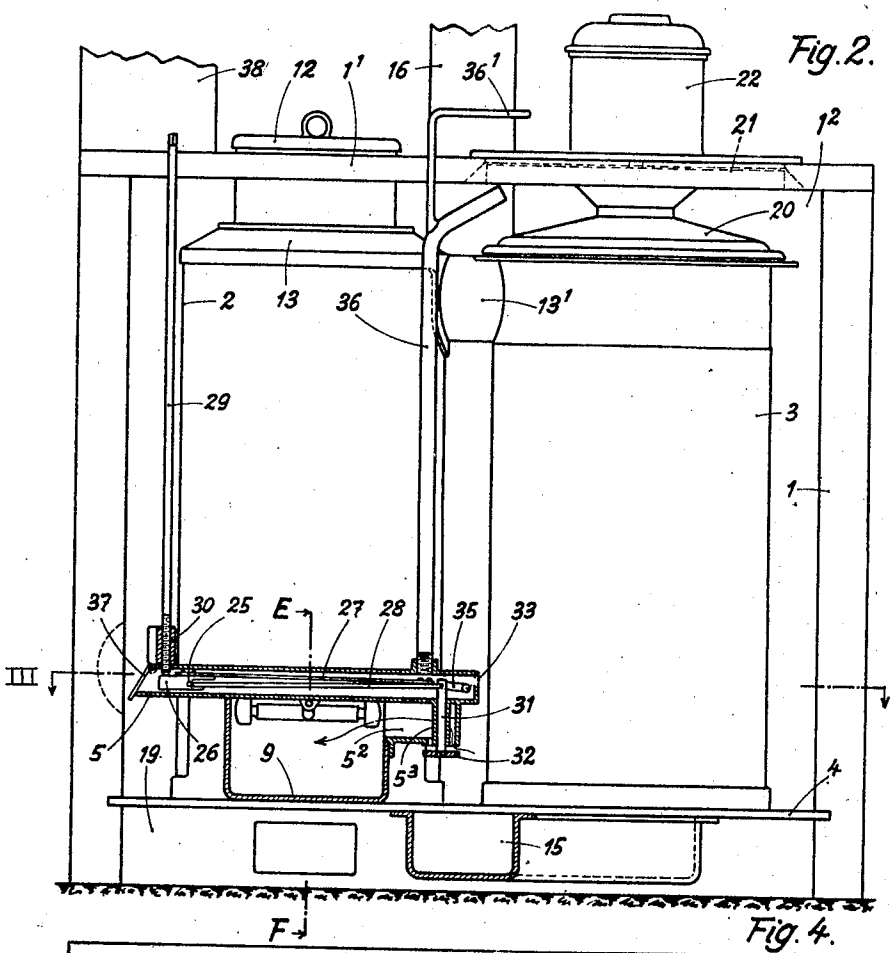

Fig. 4.

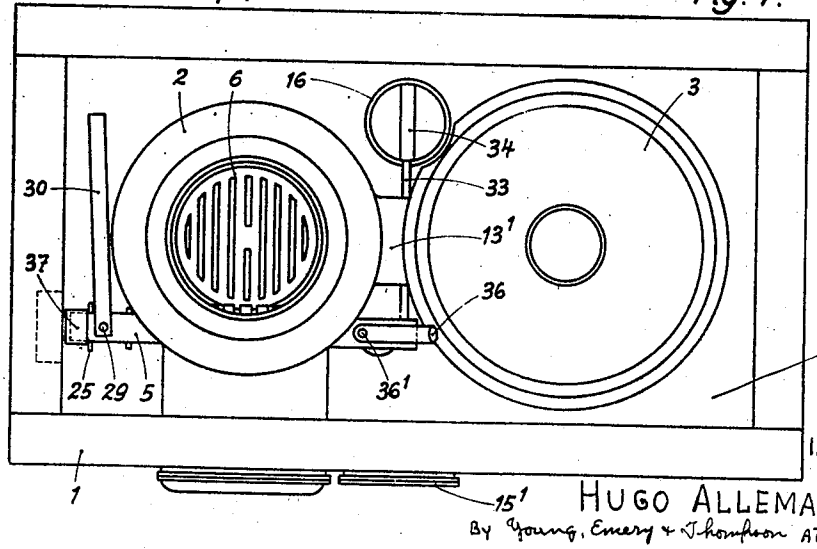

INVENTOR

HUGO ALLEMANN

By Young, Emery & Thompson ATTORNEYS

Patented Nov. 26, 1940 2,222,893

UNITED STATES PATENT OFFICE

2,222,893

SOLID FUEL BURNING FURNACE

Hugo Allemann, Bettlach, Switzerland

Application November 18, 1936, Serial No. 111,529
In Switzerland November 25, 1935

2 Claims. (Cl. 126—112)

The present invention relates to a furnace for solid fuel.

The principal object of the invention is to provide, in addition to an efficient utilization of heat, the possibility of diminishing the emission of heat suddenly from a maximum to zero and of changing the generation of heat nearly to naught and to provide that even after a day's stop the emission of heat may be raised suddenly to the maximum.

The annexed drawings illustrate an embodiment of the invention. In the drawings:

Fig. 1 is a longitudinal section on line I—I in Fig. 3,

Fig. 2 a sectional front elevation with the front wall removed,

Fig. 3 a plan view of a horizontal section on line III—III in Fig. 2,

Fig. 4 a plan of the furnace with the cover removed.

According to the drawings a cylindrical furnace 2 and a recuperator of heat 3 are carried by a bottom plate 4 forming a partition wall, inside of a fireproof and hermetically sealed brick chamber 1. The furnace proper 2 comprises a sheet iron envelope 7 inside of which a grate 6 is arranged and combined with a square box 5 forming the casing of a thermostat. The grate and square box are carried by a cylindrical case 9' supported by the bed plate 4 and forming the ash pit of the furnace. The cylindrical fire box 8 is constructed of refractory bricks and surrounded by insulating material 10 filling the space between the envelope 7 and the walls of the ash pit and fire box. This fire box supports inside of a funned-like extension, a refractory ring 8' having passages 8^2 between said extension and ring for the gases of combustion. An iron cylinder 11 serving as a chute for the solid fuel is carried by said ring 8' and is extended to the outside of the brick chamber where it is closed by a cover 12. The hollow space between envelope 7 and chute 11 is covered by a sheet iron collar 13 and forms a flue from which the combustion gases are led through a neck 13' into the recuperator 3. The latter is formed of a central tube 17 closed by a cover 17' and arranged centrally inside of a hollow cylinder 14. This cylinder is formed with a number of annular ribs 14' and partition walls 14^2 provided with passage openings 14^3 and the gases are led from the neck 13' in several manifold windings around the central tube 17 to be discharged into a smoke flue 15 arranged underneath the bottom plate 4 and provided with a cleaning door 15'. From here the gases may escape through a vertical chimney tube 16. The hollow cylinder 14 is provided on its outside with longitudinal ribs 14^4 which are surrounded by an envelope 18. Thereby an air jacket is formed between envelope 18 and cylinder 14 constituting the sole communication between the inside of a hood 20 covering the envelope 18 and the fresh air admission chamber 19 formed beneath the bottom plate 4. Hood 20 is hermetically joined to the envelope 18 and opens into the hub of a blower 21 which is adapted to deliver the hot air from between the ribs 14 into the space 1'' surrounding the envelopes 7 and 18 of the furnace and the recuperator. The blower 21 is located just beneath the bedplate 22' of an electric motor 22 in an opening of the top plate 1' of the brick chamber and is operated by this motor. In the space 1'' the hot air flows from the periphery of the blower around the baffle plate 23, made accessible through the cleaning hole 24, into the vertical air flue 38 in a corner of the brick chamber. The cleaning hole 24 is covered by a loose plate which serves as a safety escape for the heated air in case of the outlet 38 being choked.

The square box 5 enclosing the thermostat is provided with lateral teeth-like extensions 5' forming part of the grate. A two armed bracket 26 pivoted to a pin 25 carries on one arm said thermostat. A flexible steel band 27 of the thermostat is attached to one arm of this bracket and with its other arm to a brass rod 28 which rests with its other end against a rotatable pin held in a slot of said bracket. An adjusting rod 29 introduced through the cover plate 1' of the brick chamber and crossing the upper wall of box 5 bears on the bracket 26 to counterbalance the thermostat. This rod has a weight 30 screwed to its bottom, which may be adjusted so as to limit the effect upon said bracket, by its contact with the box. Underneath this box, cast to it and opening into the ash pit is an air admission box 5^2. The air admitting valve seat is provided in its bottom wall and cooperates with a valve disc 32 having its stem 31 guided in an eye 5^3 of box 5^2 and supported by the brass rod 28 which is engaged into a lateral notch of said valve stem. By this arrangement valve 32 will follow all swingings of the end of the thermostat. But the valve stem 31 is also hinged to an arm 35 fast to a shaft 33 to the end of which is fixed a damper 34 controlling the inlet into a vertical chimney tube 16.

A pipe 36 bent at its upper end in the direction of the air current produced by the blower

is provided with a handle 36' projecting over the cover plate 1' and is held loose in a nipple of box 5. This box 5 is provided at its left end with a flap 37 arranged to let any air pressure inside of the box 5 escape but to prevent entry of any air from the outside. In the air chimney 38 shown with dotted lines in Fig. 3 a flap valve 39 (see Fig. 1) is held by means of silk cord 41 attached to an arm 40 rigidly fast to said valve in its open position. Should an open flame reach said silk cord it would be consumed and let the valve drop, whereby said fire would become choked.

The thermostat 25, 26, 27, 28 is made so sensitive that at a difference of temperature of about 50° the valves 32 and 34 are opened or closed completely, while the adjustment of adjusting rod 29 is such that the valves are closed at a glowing heat of 800°. By the simultaneous adjusting of both valves it will be possible to render the chimney draught completely automatically adjustable. Since the extensions 5' are in direct contact with the fire, the glow of the fire can at a stop of the operation of the whole arrangement be kept so constant, that it will never be extinguished and upon starting of the blower will work again with full effect. The insulating of the furnace reduces its radiation to a minimum and therefore the plant will consume very little combustible during the stops. As soon as the blower begins to run, some air will be blown through the pipe 36 and strike the thermostat and lift the flap 37 leading into the free space of the brick chamber. Thereby the thermostat, which during the stop has assumed nearly the temperature of the fire, will be cooled. This is the purpose of opening valves 32, 34. A certain pressure is produced by the blower in the brick chamber so that the admission of air through the opening of the valve 32 and neck 52 into the fire is increased and thereby also the development of heat is increased.

In order to adapt the development of heat to the state of the atmosphere the pipe 36 may be turned more or less into the air current produced by the blower so that the cooling of the thermostat will also change in a corresponding manner.

If the temperature in the dwelling rooms is very low, the thermostat, while maintaining the same adjustment of the pipe 36, will be further cooled and at a higher temperature of the dwelling the room will be less cooled, so that at a low temperature the furnace will develop more heat and at a higher temperature less heat.

What I claim is:

1. In a fluid heating furnace, a fire-box comprising refractory material for solid fuel, a grate, a chamber above the fire-box for receiving hot combustion gases from the fire-box, a duct for supplying combustion supporting air to the fire-box, a valve in said duct, a thermostat for controlling said valve mounted on the grate for direct exposure to the temperatures in the fire-box, a fluid-containing jacket surrounding said chamber, fire-box and grate, the fluid therein being in heat exchange relation with said chamber, and insulation surrounding said fire-box and grate for preventing the cooling of the contents of said fire-box by the fluid in said jacket.

2. In a fluid heating furnace, a fire-box comprising refractory material for solid fuel, a grate, a chamber above the fire-box for receiving hot combustion gases from the fire-box, said chamber having walls of heat-conducting material for transferring heat from hot gases in said chamber to a medium surrounding said chamber and fire-box, a duct for supplying combustion supporting air to the fire-box, a valve in said duct, a thermostat for controlling said valve mounted immediately adjacent the fire-box for direct exposure to the temperatures in the fire-box, and insulation surrounding said fire-box and grate for preventing the medium surrounding said chamber and fire-box from cooling the fire-box and grate.

HUGO ALLEMANN.