(12) INTERNATIONAL APPLICATION PUBLISHED UNDER THE PATENT COOPERATION TREATY (PCT)

(19) World Intellectual Property Organization
International Bureau

(43) International Publication Date
8 November 2007 (08.11.2007)

PCT

(10) International Publication Number
WO 2007/125164 A1

(51) International Patent Classification:
G06K 19/077 (2006.01) *H01Q 23/00* (2006.01)
H01Q 1/38 (2006.01) *H01Q 1/52* (2006.01)

(21) International Application Number:
PCT/FI2007/050218

(22) International Filing Date: 24 April 2007 (24.04.2007)

(25) Filing Language: Finnish

(26) Publication Language: English

(30) Priority Data:
20065279 28 April 2006 (28.04.2006) FI

(71) Applicant *(for all designated States except US)*: **WISTEQ OY** [FI/FI]; Salvesenintie 6, FI-40420 Jyskä (FI).

(72) Inventors; and
(75) Inventors/Applicants *(for US only)*: **MERILÄINEN, Olavi** [FI/FI]; Tekolammentie 17 B 12, FI-40530 Jyväskylä (FI). **SEPPÄ, Heikki** [FI/FI]; Pantiotie 26, FI-00370 Helsinki (FI).

(74) Agent: **KESPAT OY**; P.O. Box 601, FI-40101 Jyväskylä (FI).

(81) Designated States *(unless otherwise indicated, for every kind of national protection available)*: AE, AG, AL, AM, AT, AU, AZ, BA, BB, BG, BH, BR, BW, BY, BZ, CA, CH, CN, CO, CR, CU, CZ, DE, DK, DM, DZ, EC, EE, EG, ES, FI, GB, GD, GE, GH, GM, GT, HN, HR, HU, ID, IL, IN, IS, JP, KE, KG, KM, KN, KP, KR, KZ, LA, LC, LK, LR, LS, LT, LU, LY, MA, MD, MG, MK, MN, MW, MX, MY, MZ, NA, NG, NI, NO, NZ, OM, PG, PH, PL, PT, RO, RS, RU, SC, SD, SE, SG, SK, SL, SM, SV, SY, TJ, TM, TN, TR, TT, TZ, UA, UG, US, UZ, VC, VN, ZA, ZM, ZW.

(84) Designated States *(unless otherwise indicated, for every kind of regional protection available)*: ARIPO (BW, GH, GM, KE, LS, MW, MZ, NA, SD, SL, SZ, TZ, UG, ZM, ZW), Eurasian (AM, AZ, BY, KG, KZ, MD, RU, TJ, TM), European (AT, BE, BG, CH, CY, CZ, DE, DK, EE, ES, FI, FR, GB, GR, HU, IE, IS, IT, LT, LU, LV, MC, MT, NL, PL, PT, RO, SE, SI, SK, TR), OAPI (BF, BJ, CF, CG, CI, CM, GA, GN, GQ, GW, ML, MR, NE, SN, TD, TG).

Published:
— *with international search report*

For two-letter codes and other abbreviations, refer to the "Guidance Notes on Codes and Abbreviations" appearing at the beginning of each regular issue of the PCT Gazette.

(54) **Title:** RFID TRANSPONDER AND ITS BLANK AND METHOD OF CONSTRUCTION FOR MANUFACTURING THE RFID TRANSPONDER

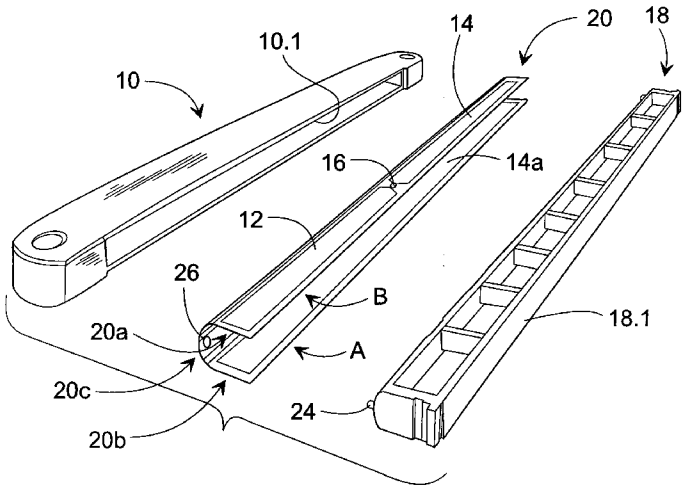

(57) **Abstract:** The i nven t i on r e l a t e s t o a n RFI D transponder, which includes a case (1 0), a radiator (12), and a ground element (14), as opposed antenna element s, a ground plane (14a intended to be set against the base at a distance from the radiator, and an electrical chip component (16). The radiator (12), ground element (14),and chip component (16) are installed on a special foil (20), which also comprises the said ground plane (14 a) on the first plane (A) and a fold (20 a) between the first and second plane, the foil (20) being thus divided into a first part (20b) on the first plane (A), the fold (20a), and a second part (20c) on the second plane (B). The case (10) has attached to it intermediate structure (18) for supporting thefirst part (20b) and the second part (20c) of the foil (20) on the said first plane (A) and second plane (B).

WO 2007/125164 A1

RFID TRANSPONDER AND ITS BLANK AND METHOD OF CONSTRUCTION FOR MANUFACTURING THE RFID TRANSPONDER

The present invention relates to an RFID transponder, which includes a case, a radiator, and a ground element, as opposed antenna elements, a ground plane intended to be set against the base at a distance from the radiator, and an electrical chip component, and in which the ground plane is on the first plane and the radiator is on the second plane, at a distance from the first plane, and in which the chip component is connected to the radiator and the ground element, and further in which the said radiator, ground element, and chip component are installed on a special foil. The invention also relates to a blank for the transponder. Here, the term RFID transponder refers mainly to a UHF-range passive transponder equipped with an RFID chip, but other applications too may be considered. Such RFID transponders operate using so-called backscatter technology. In this connection, reference is also made to so-called microstrip antennae.

A passive RFID transponder is a small device comprising an antenna, microcircuit, and memory, which uses backscattering to transmit the contents of its memory when it receives a transmission command from a reading device and the reading device illuminates it with a radio signal. A passive transponder has no battery, but instead draws its operating power from the radio signal transmitted to it by the reader. The transmission of power and information between the transponder and the reader can take place with the aid of a magnetic field, an electric field, or a radiating radio signal. Active transponders have a battery and somewhat simpler operation, as power transmission is not needed.

Patent application publication US2004/0005754 A1 discloses one 'smart label' construction and a method for manufacturing it. Though the example in the publication concerns an inductively

connecting RFID transponder, the same type of construction can also be applied to transponders operating at a radio frequency, which latter have a substantially greater range than the former. In the publication, polycarbonate, polyolefin, polyester, polyethylene terephthalate (PET), polyvinylchloride (PVC), and acrylonitrile/butadiene-styrene copolymer are presented as materials of the base web.

A challenge in RFID transponders operating in the UHF range is to make them operate reliably even on conductive surfaces. This is because the electrical properties of the antenna also depend on the properties of the installation surface. The effect of the base can be reduced sufficiently by equipping the transponder with a separate conductive shielding plane, above which the antenna is raised slightly. Another possibility is to use so-called PIFA (Planar Inverted F-antenna) antennae, in which the ground element of the antenna is formed of a sufficiently large surface area below the radiator. The totality is then less sensitive to the properties of the base and the transponder can generally be made to function on a conductive surface.

The manufacture of an PIFA antenna is difficult and expensive, particularly relating to the vias, due to the complexity of the construction. VTT (the Technical Research Centre of Finland) has published a basic solution (WO 2006/120287A1) for a so-called PAFFA antenna, which is intended to solve the problems relating to PIFA antennae. According to the abstract of the publication, a special folding technique in the antenna base is used to replace the vias of a PIFA antenna.

The present invention is intended to create a mechanical solution for reliably supporting the structures of an RFID transponder. The characteristic features of the transponder according to the invention are stated in the accompanying Claims 1.

A blank for the transponder according to the invention is presented in Claim 9.

The invention can be applied to both RFID transponders equipped with a separate ground plane, and to transponders equipped with a newer PAFFA-type antenna structure. In one embodiment, the folded foil is supported on a special spacer piece, which keeps the planes of the foil at a distance to each other. In a second embodiment of the invention, the foil is supported directly on the side walls of the case. The solution applies generally to an antenna structure for a two-terminal antenna connection. A PAFFA antenna structure comprises a ground plane on the first surface, at least one transmission line on the second surface, connected to the ground plane through a fold in the edge of the antenna structure, in which case the fold acts as the primary source of the magnetic field, an insulator layer arranged between the first and second surface, and an electronic component, in which there is a two-terminal antenna, connected to the antenna structure. According to the solution, the electronic component is attached to the second surface of the antenna structure and connected from one of the antenna terminals to the transmission line and from the other terminal to either a second transmission line or to the fold.

Other embodiments and benefits of the invention are described hereinafter, in connection with examples of applications, which are shown in the accompanying drawings, in which

Figures 1a - 1c show the construction and assembly of one RFID transponder according to the invention,

Figures 2a and 2b show a second assembly of the RFID transponder, and

Figures 3a - 3c show a blank for an RFID transponder, manufactured using the injection moulding technique, and its assembly.

In the embodiment of Figure 1a - 1c, the main components of the RFID transponder are a case 10, a foil 20, and an intermediate frame 18. There is an opening 10.1 in the side wall of the case 10 for the installation to be described later. The foil 20 is manufactured in some known manner and in it there are, as electrical elements, an electronic chip (RFID), radiator 12, ground element 14, which in this case also forms the ground plane 14a. The ground element 14 is connected by a transmission line 19 to the radiator at a distance from the feed point of the chip. The construction of the antenna element does not actually come within the scope of the present invention. Here, the frame 18 is for installing the foil 20. In the frame 18, there is a wall 18.1 covering the opening. To facilitate the installation of the foil, the front edge of the frame includes pins 24, with corresponding holes 26 in the foil, with the aid of which the foil can be precisely aligned as desired.

In the foil 20, there is a first part 20b, a fold 20a, and a second part 20c. When the foil 20 is folded on top of the frame 18 according to Figure 1b, the first part 20b remains on the first plane A and the second part 20c remains on the second plane B. Thus, the frame 18 with the foil 20 can be pushed in, Figure 1c. The joints can be, for example, welded using ultrasound, in order to create an airtight structure.

In this case, the foil 20, together with its insulation, folded to its final form, forms an RFID transponder with advantageous electrical properties. The length of the radiator is approximately $\lambda/4$ ($\varepsilon = 1$, i.e. the air gap). At the example of a frequency of 867 MHz, the vertical-angle length from the free end of the radiator 12 to the middle of the transmission line 19 is 66 mm in the example according to the figure, in which the gap between the planes is 4 mm. It should be noted that the chip 16 is attached to the ground element 14 over a considerably shorted conductor length than $\lambda/4$. In this electrical application, the chip 16 is attached to the edge of the radia-

tor at a point that corresponds to the impedance of the chip. In this relation, the location of the chip does not greatly affect the resonance frequency. According to Figure 1b, the chip 16 remains on the same side as the radiator 12. The length of the electrical parts of the foil, in the direction of the fold, is preferably $4/\sqrt{\varepsilon} - 15/\sqrt{\varepsilon}$ (cm), in which ε is the dielectric value of the substance between the first and second planes.

The assembly of Figure 2a shows a second structure of an RFID transponder, which is based on a known dipole structure and a separate ground plane against the base. In this case, the radiator 12 and the ground element 14 are on the plane B with the chip 16 (part 20c of the foil 20). The electrically separate ground plane 14a is on plane A (part 20b of the foil 20). The fold 20a remains between these parts. A foil of this kind can be easily installed in the same way as above on top of the frame 18 and a rugged transponder structure created, Figure 2b.

According to Figure 3a, the blank 10' for an RFID transponder can be manufactured by injection moulding, in such a way that the foil 20 is placed ready in the mould. In the blank there is a base plane and sides 10.3, as well as spacer pieces 10.2. One end of the plane can be turned, together with the foil, on top of the sides 10.3 and, for example, the joints welded together using ultrasound, when a transponder 10, installed in a case, will be created, which functionally corresponds to the transponder described above, depending on the electrical structures of the foil.

In the above, air is used between the planes. It is also possible to use a circuit-board material, or preferably plastic, which acts at the same time as the body of the transponder, as an intermediate substrate.

CLAIMS

1. RFID transponder, which includes a case (10), a radiator (12), and a ground element (14), as opposed antenna elements, a ground plane (14a) intended to be set against the base at a distance from the radiator, and an electrical chip component (16), and in which the ground plane (14a) is on the first plane (A), and the radiator (12) is on the second plane (B), at a distance from the first plane, and in which the chip component is connected to the radiator (12) and the ground element (14), and, further, in which the said radiator (12), ground element (14), and chip component (16) are installed on a special foil (20), characterized in that the said foil (20) also comprises the said ground plane (14a) on the first plane (A) and a fold (20a) between the first and second plane, the foil (20) being thus divided into a first part (20b) on the first plane (A), the fold (20a), and a second part (20c) on the second plane (B), and intermediate structure (18) relating to the case (10) for supporting the first part (20b) and the second part (20c) of the foil (20) on the said first plane (A) and second plane (B).

2. RFID transponder according to Claim 1, characterized in that the ground plane (14a) is connected to form the ground element (14) by a transmission line (19) running through the fold (20a).

3. RFID transponder according to Claim 1 or 2, characterized in that the foil is attached to the inner surface of the case, the said intermediate structure thus being formed by the actual case.

4. RFID transponder according to Claim 1 or 2, characterized in that the foil (20) is supported on the internal intermediate structure (18) carried by the case, which determines mechanically the distance of the first and second levels from each

other, the said intermediate structure thus being formed mainly of the intermediate structure (18).

5. RFID transponder according to any of Claims 1 - 4, characterized in that the intermediate structure (18) is a frame creating mainly air insulation between the first and second planes.

6. RFID transponder according to any of Claims 1 - 4, characterized in that the intermediate structure (18) is board, which has a chosen dielectric value ε.

7. RFID transponder according to any of Claims 4 - 6, characterized in that the intermediate structure (18) is arranged to be pushed in through an opening in the wall of the case (10) and the intermediate structure (18) includes a wall covering the opening.

8. RFID transponder according to any of Claims 1 - 7, characterized in that the length of the electrical components in the direction of the fold is $4/\sqrt{\varepsilon} - 15/\sqrt{\varepsilon}$, in which ε is the dielectric value of the substance between the first and second planes.

9. Blank for an RFID transponder, which includes a case-component blank (10'), a foil (20) comprising a ground plane, a ground element, a radiator, and a two-terminal chip component connected to the radiator and the ground element, and in which the said ground plane, ground element, radiator, and chip component are installed on the foil, characterized in that the case-component blank (10') comprises a planar area and side elements (10.3) at its edges and the foil (20) is installed in a planar form on this area, which case-component blank (10') is, together with the foil (20), arranged to be folded in two, to form a closed case (10), in which case (10) the parts of the

foil (20) located on each side of the fold take up a position at a distance from each other.

10. Blank according to Claim 9 for an RFID transponder, characterized in that the blank (10') of the case component is an injection-moulded piece.

11. Method of construction for manufacturing an RFID transponder according to Claim 1, in which the transponder is assembled from prefabricated components, which include a case (10) and a foil (20) containing the electrical components, and in which the foil is support on the case (10) in a U shape, one branch containing a ground plane intended against the base, characterized in that an intermediate piece (18) is formed, around which the foil (20) is folded into the said U shape, after which the intermediate piece (18) with the foil (20) is pushed into the case (10) and the intermediate piece is attached to the case (10).

12. Method of construction for manufacturing an RFID transponder according to Claim 1, in which the transponder is assembled from prefabricated components, which include a case (10) and a foil (20) containing the electrical components, and in which the foil is supported on the case (10) in a U shape, one branch containing a ground plane intended against the base, characterized in that the case blank (10') is manufactured by injection-moulding as an essentially planar object and the foil is located as an inlay component in the mould before moulding and the finished blank (10') with the foil (20) is folded in two and finally the joints are closed, in order to create a closed case (10).

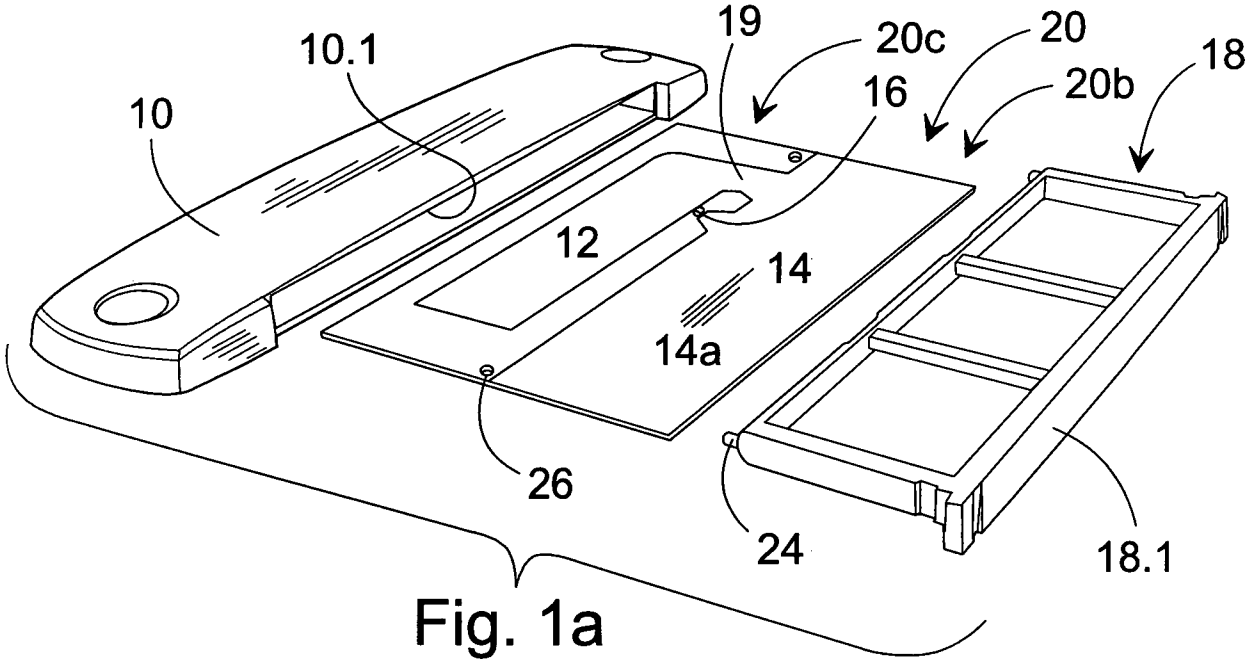

Fig. 1a

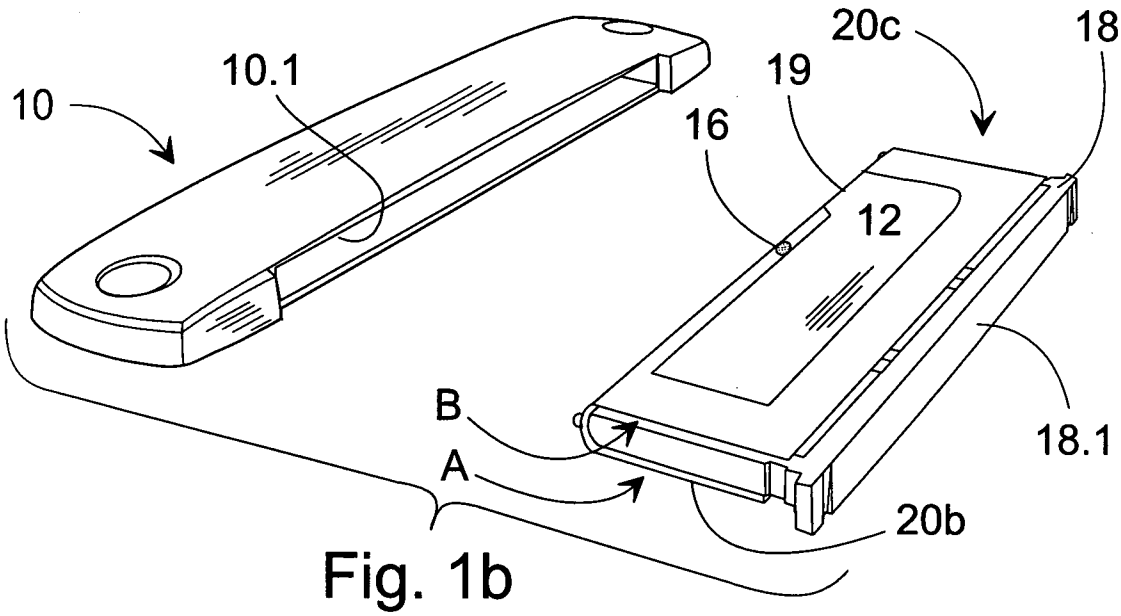

Fig. 1b

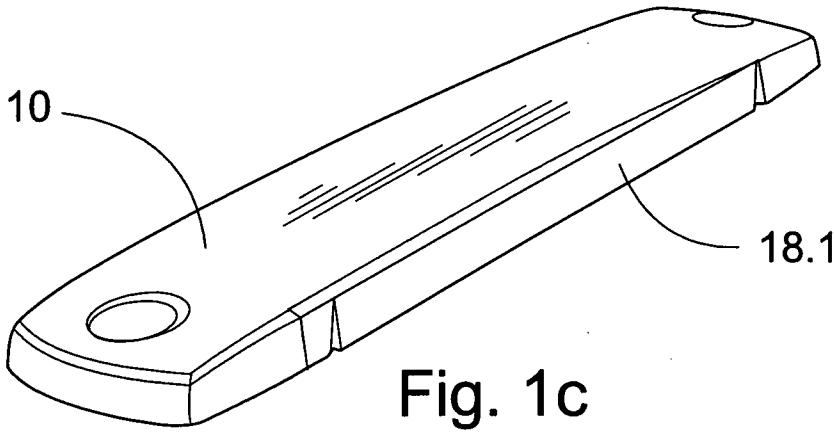

Fig. 1c

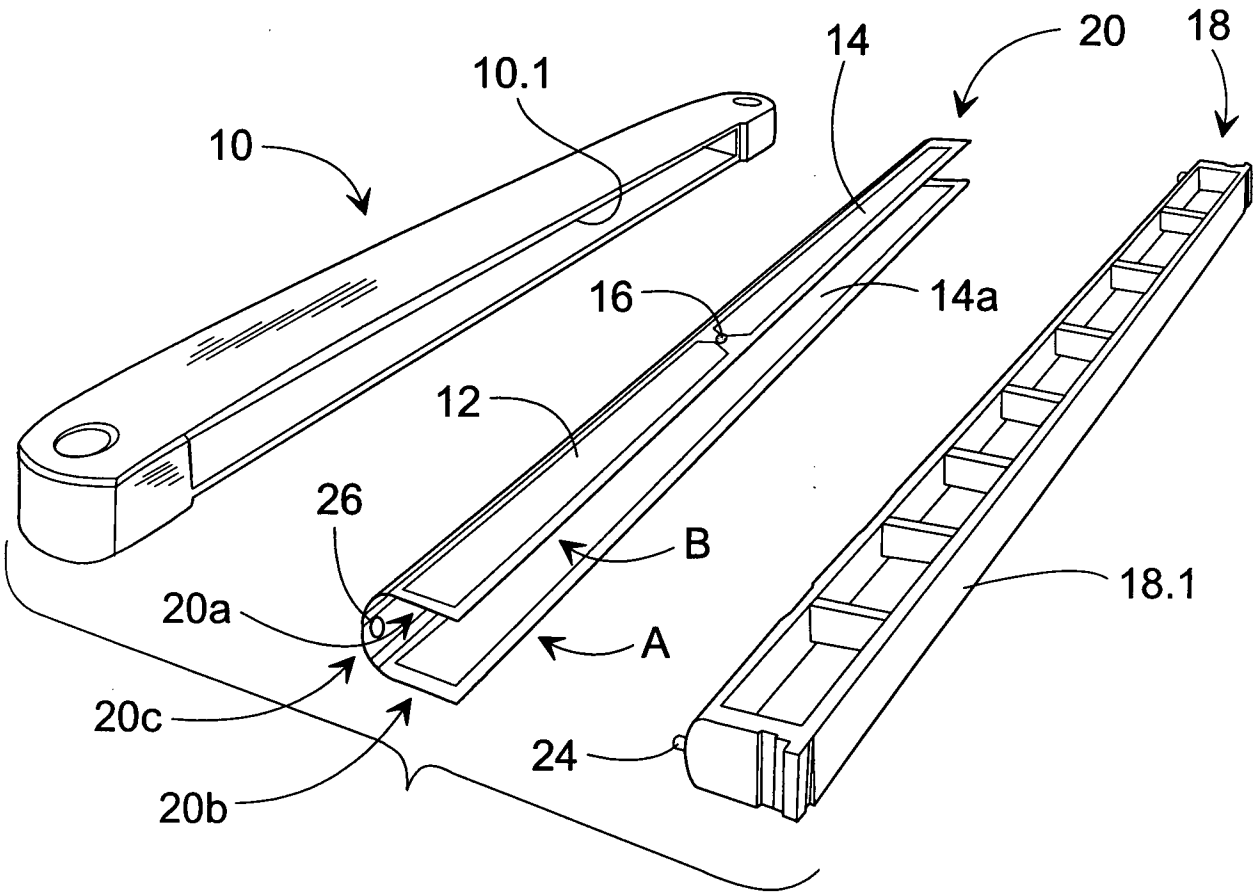

Fig. 2a

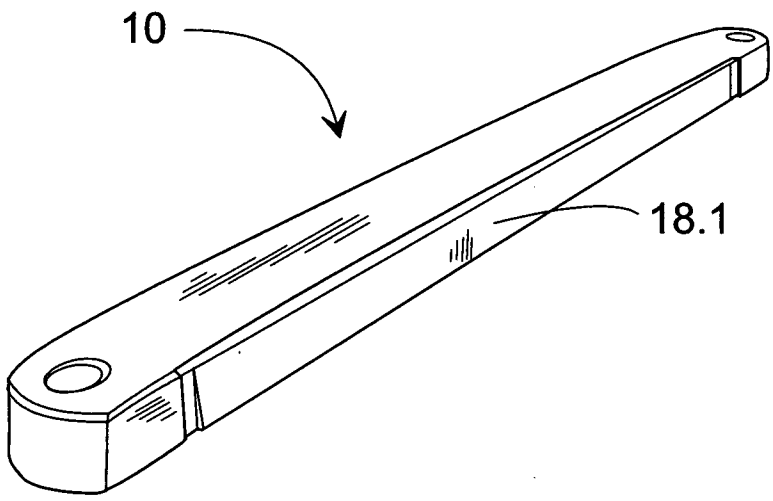

Fig. 2b

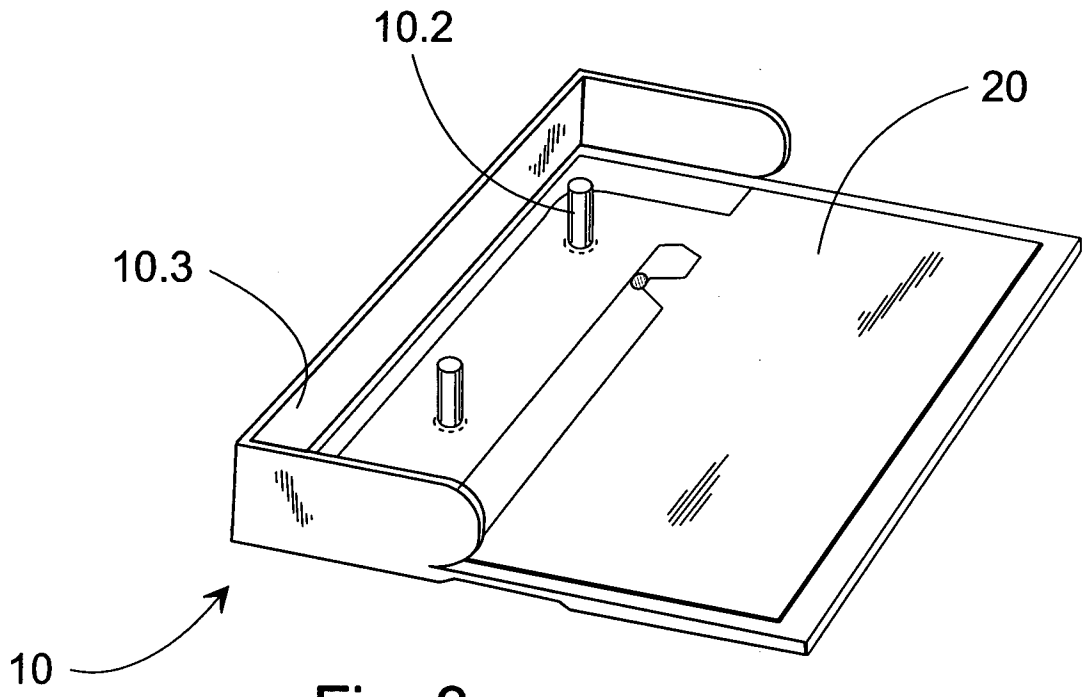

Fig. 3a

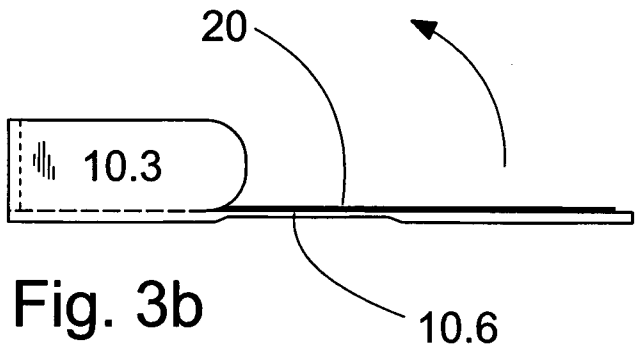

Fig. 3b

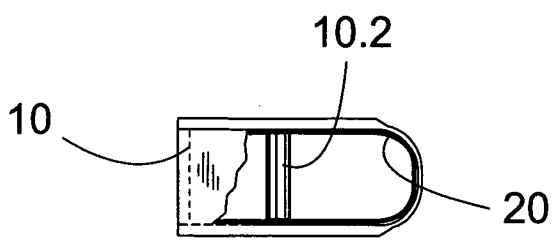

Fig. 3c

INTERNATIONAL SEARCH REPORT

International application No.
PCT/FI2007/050218

A. CLASSIFICATION OF SUBJECT MATTER

See extra sheet

According to International Patent Classification (IPC) or to both national classification and IPC

B. FIELDS SEARCHED

Minimum documentation searched (classification system followed by classification symbols)

IPC8: G06K, H01Q, H04B

Documentation searched other than minimum documentation to the extent that such documents are included in the fields searched

DK, FI, NO, SE

Electronic data base consulted during the international search (name of data base and, where practicable, search terms used)

EPO-Internal, WPI

C. DOCUMENTS CONSIDERED TO BE RELEVANT

Category*	Citation of document, with indication, where appropriate, of the relevant passages	Relevant to claim No.
A	US 2004/0196190 A1 (MENDOLIA G S et al.) 07 October 2004 (07.10.2004), EPODOC abstract; paragraphs [0051] - [0108]; Figs. 1-12, 15, 16	1-12
A	WO 2004/093249 A1 (AVERY DENNISON CORP et al.) 28 October 2004 (28.10.2004), EPODOC abstract; paragraphs [0074], [0111] - [0114]; Figs. 17-19	1-12
A	WO 2005/048181 A1 (AVERY DENNISON CORP et al.) 26 May 2005 (26.05.2005), EPODOC abstract; paragraphs [0072] - [0079]; Figs. 10, 11	1-12
A	US 2005/0275591 A1 (KING P F et al.) 15 December 2005 (15.12.2005), EPODOC abstract; paragraphs [0125] - [0129]; claim 16; Figs. 25-28	1-12
P, A	WO 2007/000807 A1 (FUJITSU LTD et al.) 04 January 2007 (04.01.2007), entire document	1-12
P, A	FI 20050507 A (VALTION TEKNILLINEN) 13 November 2006 (13.11.2006), entire document	1-12

☒ Further documents are listed in the continuation of Box C. ☒ See patent family annex.

* Special categories of cited documents:
"A" document defining the general state of the art which is not considered to be of particular relevance
"E" earlier application or patent but published on or after the international filing date
"L" document which may throw doubts on priority claim(s) or which is cited to establish the publication date of another citation or other special reason (as specified)
"O" document referring to an oral disclosure, use, exhibition or other means
"P" document published prior to the international filing date but later than the priority date claimed
"T" later document published after the international filing date or priority date and not in conflict with the application but cited to understand the principle or theory underlying the invention
"X" document of particular relevance; the claimed invention cannot be considered novel or cannot be considered to involve an inventive step when the document is taken alone
"Y" document of particular relevance; the claimed invention cannot be considered to involve an inventive step when the document is combined with one or more other such documents, such combination being obvious to a person skilled in the art
"&" document member of the same patent family

Date of the actual completion of the international search	Date of mailing of the international search report
12 June 2007 (12.06.2007)	20 August 2007 (20.08.2007)

Name and mailing address of the ISA/FI
National Board of Patents and Registration of Finland
P.O. Box 1160, FI-00101 HELSINKI, Finland
Facsimile No. +358 9 6939 5328

Authorized officer
Tuomo Ritari
Telephone No. +358 9 6939 500

INTERNATIONAL SEARCH REPORT

International application No.
PCT/FI2007/050218

C (Continuation). DOCUMENTS CONSIDERED TO BE RELEVANT

Category*	Citation of document, with indication, where appropriate, of the relevant passages	Relevant to claim No.
P, A	US 2006/0267843 A1 (SAKAMA I et al.) 30 November 2006 (30.11.2006), entire document	1-12

INTERNATIONAL SEARCH REPORT
Information on patent family members

International application No.
PCT/FI2007/050218

Patent document cited in search report	Publication date	Patent family members(s)	Publication date
US 2004/0196190 A1	07/10/2004	None	
WO 2004/093249 A1	28/10/2004	US 2007080233 A1	12/04/2007
		KR 20060004932 A	16/01/2006
		CN 1795585 A	28/06/2006
		CN 1792003 A	21/06/2006
		CN 1788387 A	14/06/2006
		CN 1771626 A	10/05/2006
		MX PA05010864 A	21/03/2006
		BR PI0409135 A	28/03/2006
		EP 1620916 A2	01/02/2006
		EP 1620921 A2	01/02/2006
		EP 1620922 A2	01/02/2006
		EP 1614192 A1	11/01/2006
		CA 2522270 A1	28/10/2004
		AU 2004229840 A1	28/10/2004
		WO 2004093246 A2	28/10/2004
		WO 2004093243 A2	28/10/2004
		WO 2004093242 A2	28/10/2004
		US 2005092845 A1	05/05/2005
		US 2004201522 A1	14/10/2004
WO 2005/048181 A1	26/05/2005	KR 20060117937 A	17/11/2006
		KR 20060115742 A	09/11/2006
		CN 1890680 A	03/01/2007
		CN 1886752 A	27/12/2006
		EP 1687762 A1	09/08/2006
		EP 1687761 A2	09/08/2006
		CA 2544792 A1	26/05/2005
		CA 2544736 A1	19/05/2005
		WO 2005045755 A2	19/05/2005
		US 2005093678 A1	05/05/2005
		US 2005093677 A1	05/05/2005
US 2005/0275591 A1	15/12/2005	DE 60126284D D1	15/03/2007
		AT 352881T T	15/02/2007
		US 2007001916 A1	04/01/2007
		EP 1696507 A1	30/08/2006
		EP 1696506 A2	30/08/2006
		EP 1676781 A2	05/07/2006
		EP 1675216 A2	28/06/2006
		CA 2518613 A1	06/11/2003
		US 2005190111 A1	01/09/2005
		WO 03092119 A2	06/11/2003

INTERNATIONAL SEARCH REPORT
Information on patent family members

International application No.
PCT/FI2007/050218

Patent document cited in search report	Publication date	Patent family members(s)	Publication date
		EP 1500165 A2	26/01/2005
		AU 2003233017 A1	10/11/2003
		ZA 200300385 A	07/11/2003
		ZA 200300383 A	07/11/2003
		ZA 200300382 A	07/11/2003
		US 2003112192 A1	19/06/2003
		US 2002126057 A1	12/09/2002
		US 2002175818 A1	28/11/2002
		US 2002175873 A1	28/11/2002
		WO 0207496 A2	31/01/2002
		WO 0207085 A1	24/01/2002
		WO 0207084 A1	24/01/2002
		EP 1301962 A2	16/04/2003
		EP 1301901 A1	16/04/2003
		EP 1301900 A1	16/04/2003
		AU 7087101 A	05/02/2002
		AU 7086201 A	30/01/2002
		AU 7086001 A	30/01/2002
		US 6501435 B1	31/12/2002
		US 6483473 B1	19/11/2002
WO 2007/000807 A1	04/01/2007	None	
FI 20050507 A	13/11/2006	WO 2006120287 A1	16/11/2006
US 2006/0267843 A1	30/11/2006	KR 20060124545 A	05/12/2006
		JP 2006333403 A	07/12/2006
		CN 1873666 A	06/12/2006
		EP 1729366 A1	06/12/2006

INTERNATIONAL SEARCH REPORT

International application No.
PCT/FI2007/050218

CLASSIFICATION OF SUBJECT MATTER

Int.Cl.
G06K 19/077 (2006.01)
H01Q 1/38 (2006.01)
H01Q 23/00 (2006.01)
H01Q 1/52 (2006.01)