United States Patent [19]

Stansfield

[11] **3,757,171**

[45] **Sept. 4, 1973**

[54] **WEB BREAK DETECTOR**

[75] Inventor: **David Elsdon Stansfield,** Ongar, England

[73] Assignee: **Hoe-Crabtree Limited,** London, England

[22] Filed: **Jan. 18, 1971**

[21] Appl. No.: **107,373**

[30] **Foreign Application Priority Data**

Jan. 23, 1970 Great Britain 3,506/70

[52] **U.S. Cl.** **317/157,** 317/DIG. 2

[51] **Int. Cl.** **H01h 9/00**

[58] **Field of Search** ..... 317/157, 130, DIG. 2

[56] **References Cited**

UNITED STATES PATENTS

3,319,087 5/1967 Wintriss 317/DIG. 2

3,470,424 9/1969 Flesselles et al. 317/130

Primary Examiner—L. T. Hix

Attorney—Larson, Taylor & Hinds

[57] **ABSTRACT**

This invention provides a web break detector incorporated in a machine operating with a web, the detector including a sensor capable of sensing the presence of a web in a given monitoring zone and a device to provide a signal in response to the sensor sensing the absence of a web in the said zone. In the event of a web not being present in the zone whilst the sensor makes an initial sensing operation following start up of the machine, override means operate to render the detector inoperative.

9 Claims, 3 Drawing Figures

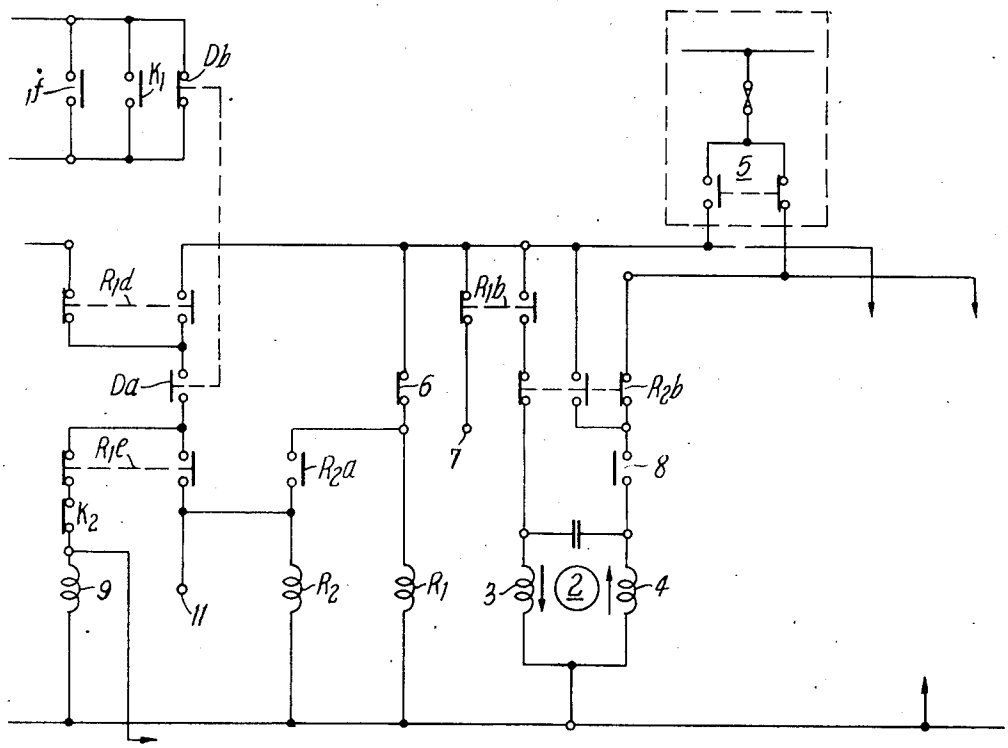

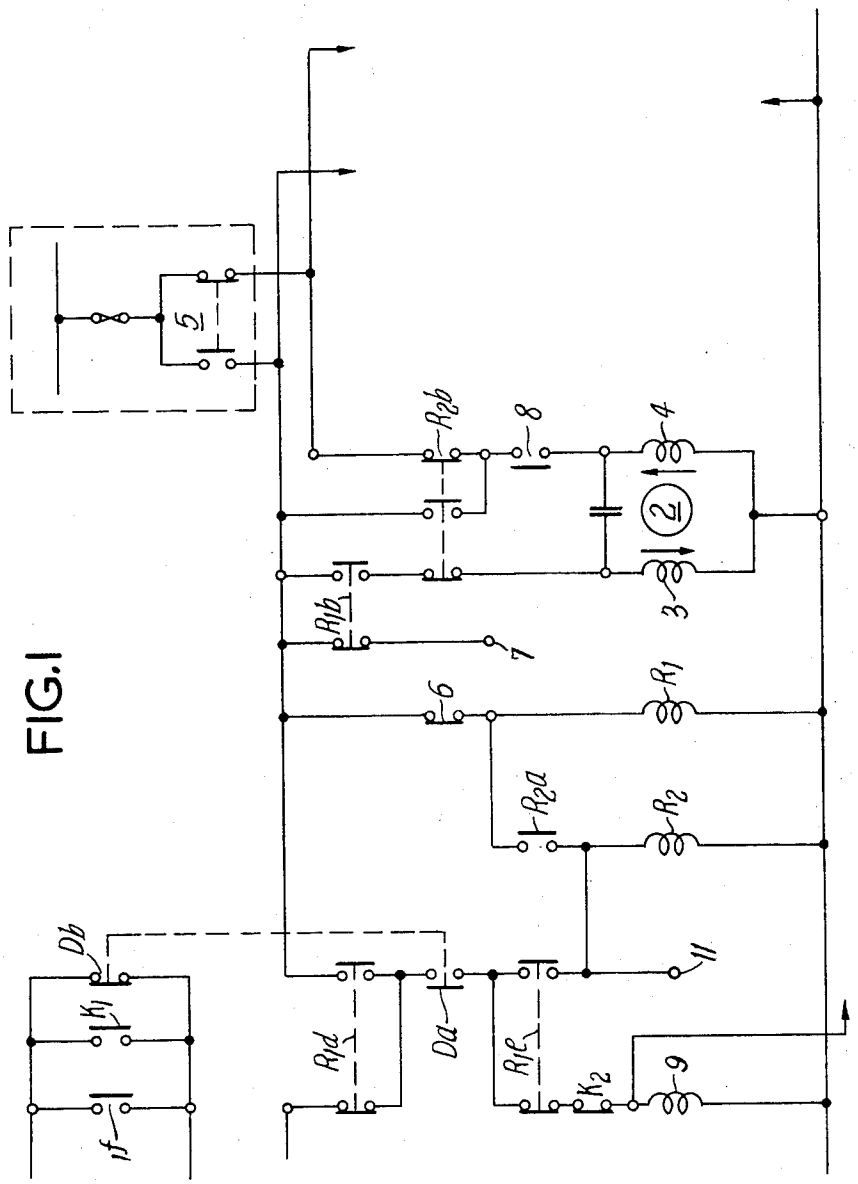

FIG.1

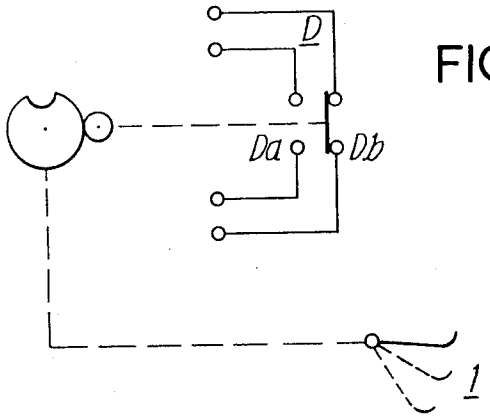

FIG. 2

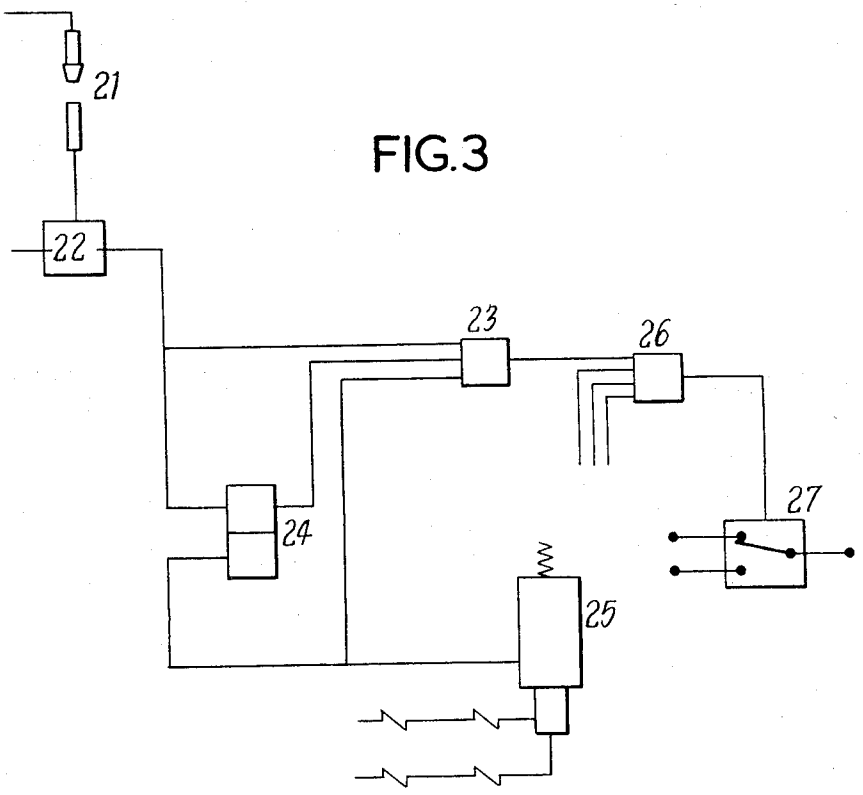

FIG. 3

WEB BREAK DETECTOR

This invention relates to web break detectors and is more particularly, though not exclusively, concerned with such detectors as used in rotary printing machines. Web fed rotary printing machines often incorporate a web break detector which monitors the web being printed and which detects any tears or breaks in the moving web. In the event of a tear or break being detected, the detector operates a web severer which severs the web at the reel stand and at the same time the detector stops the machine.

One convenient and well known type of detector is the motorised finger which, on start-up of the press and after a certain machine speed (expressed in copies of printed article per hour) has been reached, is swung down onto the web and rests there, the drive motor therefor continuing its movement until halted by a limit switch, this relative movement being permitted by means of a resilient connection between the motor and the lever shaft. If a web break occurs, then the finger moves down further under the action of the resilient connection until it operates both a severer switch causing the web to be severed at the reel stand and a stop switch causing the press to be stopped.

However, two or more detectors positioned side-by-side across the whole printing width of the machine are often required to cater for the case where the web being printed occupies only a part of the full printing width of the machine and in this case the detectors must be individually controllable since if any one detector which is not needed is switched-on, the finger will merely move down and give a false indication that the web has broken resulting in the web being severed and the machine stopped unnecessarily.

Individually controllable detectors, however, present the problem that if any one which is not required, is switched-on erroneously, the same result occurs. If any particular detector is not switched on when a web break occurs, there is a strong possibility that paper will wrap around a rotating cylinder and build up to such a thickness that damage to the printing unit may result before the press is stopped.

The invention seeks to solve this problem, or at least to improve upon the known detectors in the respect.

According to the present invention, there is provided a web break detector as incorporated in a machine operating with a web and including a sensor capable of sensing the presence of a web in a given monitoring zone, a device to provide a signal in response to the sensor sensing the absence of a web in the said zone and means to prevent operation of the signal producing device whilst the sensor makes an initial sensing operation following start up of the machine and, in the event of absence of web, to render the detector inoperative.

The sensor may be of the motorised finger type consisting of a web engaging lever and a drive motor therefore connected to the lever through a resilient coupling, the signal producing device may be a switch arranged to be operated by the lever in the absence of a web and the means may incorporate one or more relays associated with the lever and the motor.

The means may comprise a relay connected in a motor supply circuit to be energised following start up of the machine and having first and second contacts arranged on relay energisation respectively to complete a current path through the motor and to render the lever controlled switch inoperative, the relay being series connected with a lower motor limit switch to drop out upon operation of the limit switch.

Conveniently the said means incorporate a second relay arranged to be energised should the lever controlled switch be operated during energisation of the first relay and having contacts arranged on relay energisation to complete a second path through the motor to return the lever to a position clear of the web path.

Alternatively the sensor may be a pneumatic device arranged to indicate by means of a pneumatic signal the presence or absence of a web, the signal producing device may also be a pneumatic device arranged to indicate by means of a pneumatic signal the presence or absence of a web and the means may incorporate one or more logic elements controlled by the pneumatic sensor.

The means preferably incorporate a coincidence gate having one input connected to the output of the sensor, and a flip-flop element with its output connected to a second input of the gate and with its two inputs connected respectively to the sensor output and to means for supplying a signal in dependence of the speed of the machine.

The term "coincidence gate" is used herein to denote a gate in which the conditions (being the presence or absence of a signal) must be the same at all the inputs of the gate for the gate to provide an output signal, for example an AND or a NOR gate.

In order that the invention may be more fully understood two arrangements of web break detector in accordance with the invention will now be described, by way of example, with reference to the accompanying drawings in which;

FIG. 1 shows a schematic layout of a control circuit for a detector employing a motorised finger type web sensing element, output

FIG. 2 shows a diagrammatic illustration of the motorised finger and associated switch, and

FIG. 3 shows a schematic layout of detector employing fluidics, i.e., the use of compressed air with pneumatic logic elements.

In each case the detector is incorporated in a rotary printing machine.

Referring to FIGS. 1 and 2, the detector incorporates a web sensor in the form of a lever or shoe 1 provided with an electric drive motor 2 connected to the lever through a resilient coupling (not shown). The motor is connected in a motor supply circuit and is provided with two windings 3 and 4, one being energised for downward lever movement to bring the lever into a web sensing position and the other for upward movement in order to return the lever to a position clear of the web path. The two arrows indicate the roles of the respective windings. Contacts 5 serve to supply current to one or other of the two motor windings, the contacts 5 being arranged to be changed over from the positions shown following start-up of the machine and after a predetermined speed has been reached (expressed in copies of printed article per hour, say 5000). The supply circuit also incorporates two relays R_1 and R_2 connected across the limb of the supply circuit incorporating the motor winding 3 and in series with a down limit switch 6 for the motor, a contact R_2a of the relay R_2 being connected between the relay R_2 and the limit switch 6. The relays R_1 and R_2 respectively have contacts R_1b and R_2b. Contact R_1b when the relay R_1 is

energised completes the current path through the winding 3 and interrupts supply to an auxiliary terminal 7. Contact R_2b when the relay R_2 is energised disconnects the winding 4 from the one terminal of the contact 5 and connects this winding to the other terminal of the contact 5 and at the same time disconnects the winding 3 from this second terminal.

The motor also has an up limit switch 8 in the supply line to the winding 4. The relay R_1 also has two sets of change-over contacts R_1d and R_1e connected in a web severer supply circuit shown as a severer winding 9 with a supply thereto, which circuit also incorporates a first contact D*a* of a detector switch D operated by the sensor lever 1. Upon operation of the relay R_1, contacts R_1d and R_1e serve to disconnect the contact D*a* from the severer circuit and at the same time to connect this contact into the motor supply circuit across the switch 6 and contact R_2a. A second auxiliary terminal 11 is associated with the contact R_1e. The detector switch D also controls a contact D*b* connected in a stop circuit of the machine, the arrangement being such that opening of the contact serves to stop the machine. A further contact R_1f of relay R_1 is connected in parallel with this switch, the contact being closed on operation of the relay thus nullifying the effect of the detector switch.

A first key operated switch K_1 is incorporated in the stop circuit and a second K_2 is interposed between the contact R_1e and the severer winding 9.

The operation of the circuit is as follows. When the machine is started up and has reached the requisite speed, the preset speed contacts 5 change over. This causes relay R_1 to be energised and all R_1 contacts to change over. The downward motor winding 3 is energised and the motor 2 lowers the lever 1.

If a web is present, the lever 1 comes to rest on this but the motor continues to move in the downward direction, the additional movement being permitted by the aforementioned resilient connection, until the limit switch 6 is operated when the relay R_1 is de-energised. When the press is stopped, the preset speed contacts 5 change back and the lever motor raises the lever 1 until the up limit switch 8 is opened.

If, during normal running, i.e., after de-energisation of the relay R_1, the web breaks, the resulting further movement of the lever 1 under the action of the resilient connection causes the detector switch D to be operated to effect severence of the web at the reel stand (contact D_1) and stopping of the press (contact D_2) respectively. The preset speed contacts 5 then change back and the lever is raised by the lever motor as for normal shut-down.

If on start-up no web is present, the lever continues to move with the motor beyond the position at which it normally comes to rest on the web and the severer and stop contacts are operated by the lever, this being arranged to occur before the motor down limit switch 6 is operated. As the relay R_1 will still be energised, the contacts R_1d and R_1e prevent current from the severer supply from reaching the severer and at the same time the contact R_1f in the stop circuit prevents the latter from being opened to stop the press. Changing over of the contacts R_1d and R_1e bearing in mind that the severer switch is now closed, causes the relay R_2 to be energised and all the R_2 contacts to be operated. Contact R_2a holds the relay R_2 energised. Changing over of the change-over contacts R_2b causes the lever motor to be reversed to raise the lever until the up limit switch 8 is operated thus returning the lever to its inoperative position at which it stays until the press is next stopped when changing back of the preset speed contacts 5 will de-energise the relays R_1 and R_2.

The printing machine will be provided with a detector for each part of the printing width of the machine for which an individual web may require to be processed and the or each detector other than the particular one referred to above is provided with a control circuit as described and connected in parallel as it were, with the control circuit for the detector described, as indicated in the accompanying drawing. However, the change-over contacts R_1d and R_1e of the various detectors will have those of their contacts connected in the severer supply circuit connected in series and the R_1f contacts of the respective detectors will be connected in parallel in the stop circuit.

The purpose of the auxiliary terminals 7 and 11 is to enable two indicator lamps to be connected to the circuit. The lamp at the terminal 7 will be illuminated during normal running of the machine but will be extinguished during energisation of the relay R_1. The lamp at the terminal 11 will only be lit during energisation of the relay R_2. The two key operated switches K_1 and K_2 enable the detector to be rendered inoperative in the event that the detector develops a fault.

In an alternative form of detector which will now be described with reference to FIG. 3 of the accompanying drawing, fluidics, i.e., the use of compressed air with pneumatic logic elements, is employed.

Here an air jet and receiver unit 21 co-operates with the part of the web being monitored by the particular detector and an air stream device 22 responsive to the stream of air between the projector and the receiver senses any breaks or tears in the web. The sensor 22 gives an output in the form of an air signal only if a web is present and if the web is intact. The sensor 22 is connected to one input of a NOR gate 23. The pneumatic circuit also includes a flip-flop element 24 having one input connected to the output of the sensor 22 and its output connected to a second input of the NOR gate 23, and a normally closed pilot solenoid valve 25. This is operated by an electric signal from the press to which the detector is fitted and operates to supply an air signal only between starting of the press and the press reaching a speed of 5000 copies of printed article per hour. The valve is connected to both the second input of the flip-flop 24 and a third input of the gate 23. The flip-flop operates in that a signal from the valve 25, and only such a signal, switches the flip-flop on in the sense that a signal is then fed to the gate 23, whereas a signal from the sensor, and only such a signal, changes the flip-flop over which is then off, no signal being fed to the gate. In the event of signals at the two inputs being applied to the flip-flop simultaneously, that from the sensor 22 predominates.

The output of the NOR gate 23 is fed to an OR gate 26, to other input terminals of which are also fed the outputs of the NOR gates of other similar detectors fitted to the machine, and the output of the OR gate is fed to an air actuated electric relay 27 which when operated switches on the web severer and stops the machine.

On start-up of the machine with a web present in the monitoring zone, the sensor 22 and solenoid valve 25 both supply signals to the flip-flop 24 which is switched

off. When the machine has reached 5,000 copies per hour, the valve **25** ceases to give a signal but this does not, of course, affect the flip-flop. However, there will now be present at two of the three NOR gate inputs zero signals, there still being a signal from the sensor **22**.

If the web breaks, the sensor ceases to supply a signal to the NOR gate **23** and this then supplies a signal to the OR gate **26** which in turn sends a signal to the relay **27** which operates the web severer and stops the press.

On the other hand, if on start-up no web is present at the projector-receiver unit **21**, the flip-flop **24** is switched on by the presence of a signal from the solenoid valve **25** in the absence of a signal from the sensor **22** and the flip-flop stays on even though the signal from the valve is no longer supplied after the machine has been speeded up. The resulting signal from the flip-flop prevents operation of the NOR gate and the detector is not therefore, in this case, rendered operative in that the absence of a signal from the sensor **22** will not operate the web severer and stop the press.

It will be seen that the automatic control of each detector in either form described above completely dispenses with any need for individual switches for the detectors whereby the detectors are switched on or off. In the event of any one or more of the detectors not being required, their respective fingers will, in the motorised finger form of detector and on speeding-up of the machine, merely sense the absence of a web in their particular path of travel and return to their inoperative positions. In the fluidic detector the flip-flops of the detectors not required will be pulsed on preventing in each case an output from the associated NOR gate.

I claim:

1. In a machine operating with a web, a web break detector including at least one sensor for sensing the presence of a web in a given monitoring zone, a device for providing a signal in response to the sensor sensing the absence of a web in the said zone and means for preventing operation of the signal producing device during an initial sensing operation of the sensor following start up of the machine and for rendering the detector inoperative responsive to a said signal indicating the absence of given web in said monitoring zone.

2. A web break detector as set forth in claim **1**, in which the sensor is of the motorized finger type comprising a web engaging lever and a drive motor therefor connected to the lever through a resilient coupling, the signal producing device comprising a switch arranged to be operated by the lever in the absence of a web and the means includes at least one relay associated with the lever and motor.

3. A web break detector as set forth in claim **2**, in which the means incorporates a relay connected in a motor supply circuit to be energized following start up of the machine and having first and second contacts for, on relay energization, respectively completing a current path through the motor and rendering the lever controlled switch inoperative, the relay being series connected with a lower motor limit switch to drop out upon operation of the limit switch.

4. A web break detector as set forth in claim **3**, in which the means include a second relay arranged to be energized should the lever controlled switch be operated during energization of the first relay and having contacts arranged on energisation of the second relay to complete a second current path through the motor to return the lever to a position clear of the web path.

5. A web break detector as set forth in claim **4**, in which the lever controlled switch has contacts both in a web severer supply circuit and in a stop circuit for the machine whereby to sever the web and to shut down the machine upon operation of the switch during normal operation of the machine.

6. A web break detector as set forth in claim **3**, in which the supply circuit includes a machine speed dependent switch whereby the initial sensing operation cannot take place before the machine has reached a predetermined speed.

7. A web break detector as set forth in claim **1**, in which the sensor comprises a pneumatic device arranged to indicate by means of a pneumatic signal the presence or absence of a web, the signal producing device also comprises a pneumatic device and the means incorporate at least one pneumatic logic element controlled by the pneumatic sensor.

8. A web break detector as set forth in claim **7**, in which the means incorporate a coincidence gate having one input connected to the output of the sensor and a flip-flop element with its output connected to a second input of the gate and with its two inputs connected respectively to the sensor output and to means for supplying a signal in dependence upon the speed of the machine.

9. A web break detector as set forth in claim **8**, in which the coincidence gate is a NOR gate and the machine speed dependent means is arranged to provide a signal between start-up of the machine and the machine reaching a predetermined speed, a connection being provided between the output of the machine speed dependent means and a third input to the NOR gate.

* * * * *