(12) INTERNATIONAL APPLICATION PUBLISHED UNDER THE PATENT COOPERATION TREATY (PCT)

(19) World Intellectual Property Organization
International Bureau

(43) International Publication Date
06 August 2020 (06.08.2020)

WIPO | PCT

(10) International Publication Number
WO 2020/157779 A1

(51) International Patent Classification:
F01K 21/04 (2006.01) *F01C 1/344* (2006.01)

(21) International Application Number:
PCT/IT2020/050007

(22) International Filing Date:
23 January 2020 (23.01.2020)

(25) Filing Language: Italian

(26) Publication Language: English

(30) Priority Data:
102019000001213 28 January 2019 (28.01.2019) IT
102019000012399 19 July 2019 (19.07.2019) IT

(72) Inventor; and
(71) Applicant: **CORSANI, Giovanni** [IT/IT]; Via del Trebbio 9, 50019 Sesto Fiorentino (FI) (IT).

(74) Agent: **FANFANI, Stefano**; Via Giovanni Bovio 19, 50136 Firenze (FI) (IT).

(81) Designated States *(unless otherwise indicated, for every kind of national protection available)*: AE, AG, AL, AM, AO, AT, AU, AZ, BA, BB, BG, BH, BN, BR, BW, BY, BZ, CA, CH, CL, CN, CO, CR, CU, CZ, DE, DJ, DK, DM, DO, DZ, EC, EE, EG, ES, FI, GB, GD, GE, GH, GM, GT, HN, HR, HU, ID, IL, IN, IR, IS, JO, JP, KE, KG, KH, KN, KP, KR, KW, KZ, LA, LC, LK, LR, LS, LU, LY, MA, MD, ME, MG, MK, MN, MW, MX, MY, MZ, NA, NG, NI, NO, NZ, OM, PA, PE, PG, PH, PL, PT, QA, RO, RS, RU, RW, SA, SC, SD, SE, SG, SK, SL, ST, SV, SY, TH, TJ, TM, TN, TR, TT, TZ, UA, UG, US, UZ, VC, VN, WS, ZA, ZM, ZW.

(84) Designated States *(unless otherwise indicated, for every kind of regional protection available)*: ARIPO (BW, GH, GM, KE, LR, LS, MW, MZ, NA, RW, SD, SL, ST, SZ, TZ, UG, ZM, ZW), Eurasian (AM, AZ, BY, KG, KZ, RU, TJ, TM), European (AL, AT, BE, BG, CH, CY, CZ, DE, DK, EE, ES, FI, FR, GB, GR, HR, HU, IE, IS, IT, LT, LU, LV, MC, MK, MT, NL, NO, PL, PT, RO, RS, SE, SI, SK, SM, TR), OAPI (BF, BJ, CF, CG, CI, CM, GA, GN, GQ, GW, KM, ML, MR, NE, SN, TD, TG).

Declarations under Rule 4.17:
— *of inventorship (Rule 4.17(iv))*

Published:
— *with international search report (Art. 21(3))*

(54) Title: MECHANICAL ENERGY GENERATOR OPERATED BY GASES PRODUCED BY AN INTERNAL COMBUSTION SET

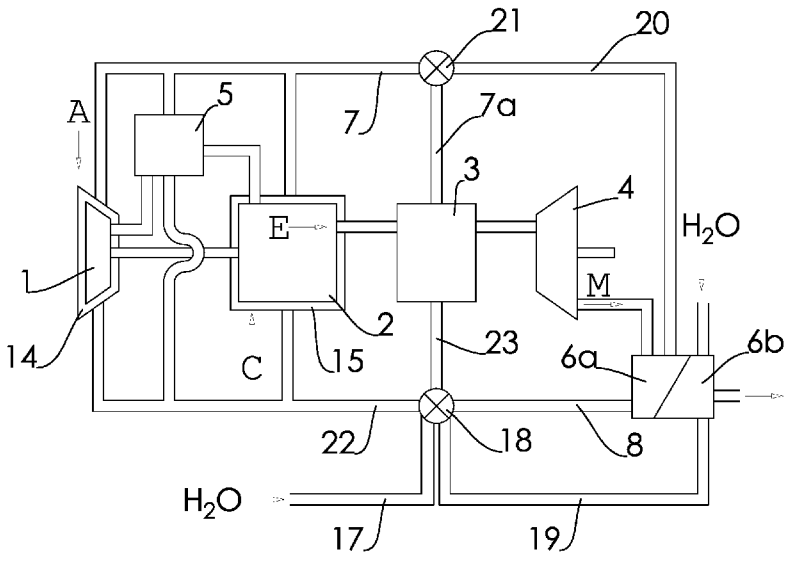

FIG. 3

(57) Abstract: Mechanical energy generator device comprising a thermal set whose exhausted gases are mixed with steam obtained thanks to the excess heat subtracted from the thermal set, in order to feed a turbomachinery intended for producing mechanical energy.

WO 2020/157779 A1

DESCRIPTION

TITLE

MECHANICAL ENERGY GENERATOR OPERATED BY GASES PRODUCED BY AN INTERNAL COMBUSTION SET

* * * * * *

TECHNICAL FIELD

The present invention belongs to the sector of engines used for generating mechanical energy starting from fuels of different kinds and natures.

Specifically, the present invention belongs to the sector of engines that combine an internal combustion set, such as a piston reciprocating engine powered by a compressor driven by its own driving shaft, with a turbine driven by gases of different natures, whose pressure and/or temperature conditions are raised thanks to the action of the combustion set, which transforms the chemical energy of the fuel into mechanical and thermal energy.

More specifically, the invention belongs to the sector of engine groups for automotive applications and, more generally, for use on land and marine vehicles.

PRESENT STATUS OF THE ART

In modern propelling systems for vehicles, energy management and a rational use thereof are key issues for obtaining lightweight and cost-effective devices and it is a common interest to find new solutions that allow to develop the same mechanical power by using smaller quantities of primary energy, with technological solutions aiming at saving energy. Energy saving does not necessarily mean less consumption of energy, but also less waste, i.e. a greater efficiency in transformations and in recoveries between the different forms of energy.

Turboexpansion, an innovative technology, recovers that part of the energy which is usually dissipated; a turboexpander

is a machinery that recovers the potential and kinetic energy dissipated in traditional systems by the gas pressure reduction phenomenon. Such energy can be recovered by making said gas expand in a turbine capable of generating mechanical power, preferably one having a radial inlet and an axial outlet, but also in turbomachineries of other type such as, for example, a pneumatic engine. Environmental impact is minimized, thanks to the fact that no consumption of valuable fuels is required for producing high temperatures.

In the present patent text, by turbomachinery we mean, in a wide sense, any engines capable of making the thermodynamic energy owned by a moving fluid, such as, for example, a turbine pneumatic engine, available at its own shaft, in the form of mechanical energy.

It is known that, to be able to extract all its energy from a high pressure gas, it is necessary to make the gas expand at a constant temperature, but the gaseous fluid cools down during this expansion and consequently it is necessary to take heat from the environment to keep the temperature constant and prevent excessive temperature decreases, which might lead to formation of ice.

OBJECTIVES AND SUMMARY OF THE INVENTION

A first object of the present invention is thus to provide a propeller set that is capable of producing mechanical energy by way of an endothermic engine, typically an Otto- or diesel-cycle one, but also Wankel engines or other types of engines, and a turbomachinery driven by the exhausted gases of the engine and by the steam generated by the excess heat subtracted from the engine itself.

Another object of the present invention is to provide a propeller set featuring a high thermal yield, by exploiting the chemical energy of the fuel over a temperature range much wider than that of the prior art systems. It is worth

pointing out that the fuel used can be either fossil or not fossil.

A last but not least object of the present invention is to provide a propeller set that is environmentally friendly and features a low pollution level.

These objects and others, which will be apparent to those skilled in the art upon reading the following text, are achieved by a device that, in one of its possible embodiments, comprises a thermal set, typically but not exclusively a reciprocating endothermic engine, preferably a two-stroke one, which drives a compressor by means of which the same engine receives comburent air at a pressure higher than the atmospheric pressure, the engine and the compressor comprise a cooling system using a fluid, such as, for example, water or diathermic oil.

The thermal set is capable of generating mechanical energy, or not, but, in any case, it transfers at least part of the combustion energy to the coolant and to its own exhausted gases; the latter are collected in a high temperature mixer where they mix with steam obtained thanks to the heat subtracted by the coolant from the thermal set; the hot mixture formed of exhausted gases and steam is then used for producing mechanical energy, by making it expand by way of a turboexpander or a pneumatic engine.

Steam can be produced directly by the thermal set, should it be water cooled, or via a heat exchanger; the latter is necessary whenever the fluid used for cooling is not water but, for example, diathermic oil.

It is worth pointing out that in the present patent text, that by water we mean any fluids, even additivated ones, capable of absorbing heat during vaporization.

In other words, water or coolant are used with the purpose of subtracting the excess heat which, otherwise, would be

dissipated in the atmosphere, and creating, instead, steam to be taken advantage of in the turbomachinery.

An advantage is in that the temperature reached by the gases during a combustion with pressurized comburent air is in the order of 2400 °C, and in that said temperature progressively decreases down to approximately 200 °C at the output from the turbomachinery, all of this taking place without any need for dispersing heat by way of heat disposal systems such as radiating fins, water-cooled jackets or the like; or better still, further advantages are obtainable by completely insulating the engine, in order to reduce heat dispersions as much as possible.

The residual heat present in the gases output from the turbomachinery can also be used for pre-heating water or coolant and consequently increasing steam production.

A further advantage is in that energy is transferred from the engine to the turbomachinery associated with a hot gas stream, hence without any need for using transmissions of a mechanical type.

It is also worth pointing out that, in the present patent text, by cold water we mean water at ambient temperature or, in any case, at a temperature lower that the temperature of the thermal set.

According to a particularly effective embodiment, the engine can be implemented in a configuration comprising a cylindrical stator which accommodates, internally thereto, an also cylindrical rotor, from the outer lateral surface of which blades protrude, whose distal ends touch the inner lateral surface of the stator which they brush against.

In a possible embodiment, such blades are slidingly coupled with the rotor and are pushed outwardly by the action of elastic thrust means, such as for instance springs, so that their distal ends touch the inner lateral surface of the

stator; preferably these blades run radially.

In a possible alternative embodiment, the rotor performs a rototranslatory motion with respect to the stator, i.e. the center of the rotor moves along a circumference that is coaxial with the axis of stator; in this case, the gas inlet and outlet ports, which are placed on the base walls of the stator, are opened and closed by the base walls of the rotor during the rototranslatory motion of the latter.

Preferably, the engine cycle is a two-stroke one, be it an Otto cycle or a diesel cycle; depending on the selected embodiment, spark-fired devices used for igniting the mixture and/or injectors might be located along the inner lateral surface of the stator.

The number of blades and other devices might vary as a function of the constructive solution adopted.

BRIEF DESCRIPTION OF THE DRAWINGS

Figure 1 shows a general schematic diagram of an embodiment of the mechanical energy generator according to the present invention. The figure shows:

- a compressor (1);
- an internal combustion engine (2);
- a high temperature mixer (3);
- a turbomachinery (4);
- an intermediate cooling exchanger (5);
- a medium temperature heat exchanger (6);
- a coolant (F);
- exhausted gases (E) coming from the engine (2);
- a mixture (M) of exhausted gases and steam expelled by the turbomachinery (4);
- fuel (C) and comburent air (A) feeding the engine (2);
- a cooling system (14) for cooling the compressor (1);
- a cooling system (15) for cooling the engine (2);
- a pipe (22) from the heat exchanger (6);

- a pipe (7) connected to the high temperature mixer (3);
- a filtering system (9).

Figure 2 shows a general schematic diagram of a further embodiment of the generator comprising a low temperature heat exchanger (10), where the pipe (7) delivers the coolant (F) output from the engine (2) in order to pre-heat the water input to the medium temperature exchanger (6).

Figure 3 shows a general schematic diagram of a particularly complete embodiment of the generator, wherein the heat exchanger (6) is a two-stage exchanger, comprising a hot circuit (6a) and a cold circuit (6b). The figure also shows a three-way mixer (21) which receives a mixture of water and steam, conveyed by the pipe (7), and regulates its flow rate and conveys it toward the high temperature mixer (3), via a pipe (7a), and toward said hot circuit (6a) of said heat exchanger (6), via a pipe (20). The figure also shows a five-way mixer (18) which receives: the water mixed with steam expelled from said hot circuit (6a) of said heat exchanger (6) via a pipe (8), the partially heated water expelled from said cold circuit (6b) via a pipe (19), and cold water input from a feeding pipe (17); said five-way mixer (18) regulates such input flows and convey them toward said pipe (22) and toward said high temperature mixer (3) via the pipe (23).

Figures 4, 5, 6, and **7** show cross-sectional views of a possible embodiment of the engine (2), implemented in a configuration comprising a cylindrical stator (211) accommodating internally thereto an also cylindrical rotor (212). For each of these configurations, the figures show the stator (211) which accommodates internally thereto the rotor (212), from the outer lateral surface of which four blades (213) are made slidingly protrude by the action of elastic thrust means (214), schematically shown in the form of cylindrical springs, which hold their distal ends in

contact with the inner lateral surface of the stator (211); the figures also show, for explanatory purposes only, an exhaust port (215), which is shown in dashed lines because derived on the non-visible base of the stator cylinder, and an inlet port (216), on the visible base of the stator cylinder. The figures also schematically show, on the inner lateral surface of the stator cylinder, devices (217) which, depending on the actual embodiment, symbolically represent fuel ignition and/or injection means. All figures show the center of the rotor (212) and the circumference representing its trajectory.

DETAILED DESCRIPTION OF EMBODIMENTS OF THE INVENTION

With reference to the attached drawings, it is here disclosed that the innovative solution according to the present patent application is designed to exploit the exhausted gases (E) of a thermal set, mixed with the steam generated thanks to the excess heat generated by combustion, in order to feed a turbomachinery (4) intended for producing mechanical energy. The production of mechanical energy performed by the turbomachinery can be supplemented, or not, by production of mechanical energy by the thermal set.

In order to reduce the energy losses that are unavoidably present in dissipation cooling or heat removal systems, the complete thermal set aims at exploiting the thermal energy in excess for producing steam.

In its simplest and most functional embodiment, such thermal set comprises an internal combustion engine (2), fed with a fuel (C) and comburent air (A).

The endothermic engine (2) comprises a cooling system (15) wherein a coolant (F) removes heat and yields it to inside a low temperature exchanger (10); advantageously, but not mandatorily, the coolant (F) is water, but it might also be diathermic oil or even another fluid.

The coolant (F) leaves the exchanger (10), after being cooled down, via a pipe (22) to cool the engine (2) again.

In particularly complete versions of the invention the engine (2) might comprise a boosting device (1), if any, such as for instance a compressor, and even an intermediate cooling exchanger (5), if any; however, the coolant used to cool these further devices is in any case conveyed in the exchanger (10) via a feed manifold which is schematically represented by a pipe (7) in the drawings; likewise, a number of branches depart from the delivery pipe (22) to supply the coolant to the engine (2), to the compressor (1), if any, and to the intermediate exchanger (5), if any.

In a first basic embodiment, illustrated in figure 1, the coolant (F), after removing heat from the engine (2) and from the other devices, if any, such as the compressor (1) and the intermediate exchanger (5), is input to a high temperature mixer (3), where it mixes with the exhausted gases (E) coming from the engine (2); the exhausted gases cause the coolant (F) to vaporize and mix therewith.

It is worth pointing out that the coolant (F) might start vaporizing while the thermal set is cooling down.

The gaseous mixture formed of the exhausted gases (E) of the engine (2) and the vaporized coolant (F) output from the high temperature mixer (3) feeds a turbomachinery (4) internally to which the gaseous mixture expands, then the exhausted gases (M) exhaust internally to a medium temperature exchanger (6), where they yield their own residual heat, thus pre-heating the coolant (F).

A more complete embodiment, illustrated in figure 2, comprises a low temperature exchanger (10), internally to which the heated coolant (F) yields its own heat to water, which subsequently enters the medium temperature exchanger (6), wherein it is further heated by the exhausted gases (M)

of the turbomachinery (4).

Internally to the medium temperature exchanger (6), the water pre-heated in the low temperature exchanger (10) increases its own temperature above 100 °C and begins evaporating; the mixture of water and steam output from the medium temperature exchanger (6) is transferred to inside the high temperature mixer (3), where the exhausted gases (E) produced by the engine (2) are also conveyed.

Internally to the high temperature mixer (3), the exhausted gases (E) coming from the engine (2) mix with the water and steam output from the medium temperature exchanger (6), thus forming a high temperature gaseous mixture which expands and drives the turbomachinery (4); the latter generates mechanical energy.

The mixture (M) of exhausted gases and steam, expelled by the turbomachinery (4), is conveyed to the medium temperature heat exchanger (6), fed with water previously pre-heated inside the low temperature heat exchanger (10).

According to a particularly complete embodiment, the medium temperature heat exchanger (6), which usually receives water from an external water source, might advantageously be connected to a filtering system (9); the latter collects and purifies the water obtained by condensation from the mixture (M) of exhausted gases and steam expelled by the turbomachinery (4) cooling down.

Should the coolant (F) be water, the high temperature mixer (3) might advantageously be connected to a water source, in order to be able to enrich the mixture of exhausted gases and steam conveyed by the pipe (7) with further water, if need be. For example, the condensed water expelled by the heat exchanger (6) might be delivered to the high temperature mixer (3).

As already said, in a particularly efficient embodiment

version, in order to maximize efficiency and performances, the engine (2) is fed with comburent air (A) pressurized by a compressor (1), preferably a rotary compressor, driven by the shaft (12) of the engine (2) itself, by way of appropriate transmission of motion systems of known types. Very advantageously such compressor (1) is provided with a cooling system (14), also connected to the pipe (22) from which it receives cold water. Thanks to such cooling system (14), part of the heat produced by the compressor (1) is yielded to the cold water conveyed by the pipe (22), the latter gets hotter and at least partially transforms into steam, in order for it to be subsequently input to the pipe (7).

In a particularly complete embodiment of the present invention, the pressurized comburent air (A), before reaching the engine (2), is sent to an intermediate cooling exchanger (5), connected to the pipe (22) from which it receives cold water, and to the pipe (7), wherein it delivers hot water and steam obtained thanks to the heat transferred from the heated air output from the compressor (1).

According to a further embodiment, said heat exchanger (6) is a two-stage exchanger comprising a hot circuit (6a) and a cold circuit (6b).

According to this embodiment, the device in accordance with the present invention comprises a three-way mixer (21) which receives the mixture of water and steam conveyed by the pipe (7) and regulates its flow rate, and conveys it to the high temperature mixer (3), via a pipe (7a), and to said hot circuit (6a) of said heat exchanger (6), via a pipe (20).

In this case, as shown in figure 3, the device according to the invention can further comprise a five-way mixer (18) which receives: the water mixed with steam expelled by said hot circuit (6a) of said heat exchanger (6) via a pipe (8),

the partially heated water expelled by said cold circuit (6b) via a pipe (19), and cold water input from a feed pipe (17); said five-way mixer (18) regulates such input streams and conveys them toward said pipe (22) and toward said high temperature mixer (3) via a pipe (23).

The turbomachinery (4) driven by the mixture of exhausted gases (E), heated water and steam can be of different types, for example it might be a pneumatic engine.

Particularly interesting results are obtained by using an internal combustion engine (2) of a particular type, with a stator (211) internally to which a cylindrical rotor (212) is accommodated; blades (213) protruding from its outer lateral surface are coupled with the cylindrical rotor (212).

According to a possible embodiment, said blades (213) are slidingly coupled with the rotor (212) and are pushed outwardly by the action of appropriate elastic thrust means (214), so that their distal ends touch the inner lateral surface of the stator (211); preferably the blades (213) run radially.

According to a further embodiment of the engine (2), the cylindrical rotor (212) rototranslates with respect to the stator (211), in that the axis of symmetry of the rotor (212) describes, in its movement, a cylindrical surface, so that the different directrices of the outer lateral surface of the rotor (212) progressively brush against the directrices of the inner lateral surface of the stator (211). In this case, the blades (213) slidingly protrude from the rotor (212), preferably in a radial direction, and are pushed outwardly by the action of said elastic thrust means (214).

It is worth pointing out that in the figures the engine (2) has been schematically shown as not having a propeller shaft, in that the presence of the latter depends on the specific configuration of the mechanical energy generator according

to the present invention, without any prejudice to the inventive concept.

CLAIMS

1. A mechanical energy generator comprising an endothermic engine (2) provided with a cooling system (15) and fed by a fuel (C) and comburent air (A), whose exhausted gases (E) feed a turbomachinery (4) which produces mechanical energy, by expelling a mixture (M) of exhausted gases and steam **characterized in that** it comprises a medium temperature heat exchanger (6) wherein said mixture of exhausted gases and steam (M) pre-heats water, the latter is then conveyed, via a pipe (22), to said cooling system (15), wherein it absorbs at least part of the thermal energy produced by the combustion taking place inside said engine (2), and possibly partially transforms into steam, and is finally conveyed, via a pipe (7), to a high temperature mixer (3), placed downstream of said engine (2) and upstream of said turbomachinery (4), wherein said exhausted gases (E) and said mixture of heated water and steam conveyed via the pipe (7) are input, so that a mixture of combusted gases and steam form internally so said high temperature mixer (3), which drives said turbomachinery (4) which co-operates with the engine (2) in producing mechanical energy.

2. The mechanical energy generator according to claim 1 **characterized in that** it comprises a low temperature heat exchanger (10) wherein the pipe (7) delivers the coolant (F) output from the engine (2) to pre-heat the water input to the medium temperature exchanger (6); the coolant (F) coming subsequently back to the engine (2) via the pipe (22).

3. The mechanical energy generator according to any of the previous claims **characterized in that** it comprises a compressor (1) which feeds said engine (2) with pressurized comburent air (A), said compressor (1) being driven by the shaft (12) of the same engine (2) and being provided with a cooling system (14), also connected to the pipe (22) from

which it receives partially heated water that subsequently absorbs thermal energy from the compressor (1) and is input to the pipe (7) which delivers it to said high temperature mixer (3).

4. The mechanical energy generator according to claim 3 **characterized in that** said pressurized comburent air (A) output from said compressor (1) is conveyed to an intermediate cooling exchanger (5), also connected to the pipe (22) from which it receives partially heated water, which absorbs thermal energy from the pressurized comburent air (A) expelled by the compressor (1), is at least partially transformed into steam, and is subsequently input to the pipe (7).

5. The mechanical energy generator according to any of the previous claims **characterized in that** said heat exchanger (6) is a two-stage exchanger comprising a hot circuit (6a) and a cold circuit (6b).

6. The mechanical energy generator according to claim 5 **characterized in that** it comprises a three-way mixer (21) which receives said water mixed with steam, conveyed by said pipe (7), and regulates its flow rate, and conveys it toward said high temperature mixer (3), via a pipe (7a), and toward said hot circuit (6a) of said heat exchanger (6), via a pipe (20).

7. The mechanical energy generator according to claim 5 or 6 **characterized in that** it comprises a five-way mixer (18) which receives: the water mixed with steam expelled by said hot circuit (6a) of said heat exchanger (6) via a pipe (8), the partially heated water expelled by said cold circuit (6b) via a pipe (19), and water input from a feed pipe (17); said five-way mixer (18) regulates such input streams and conveys them toward said pipe (22) and toward said high temperature mixer (3) via the pipe (23).

8. The mechanical energy generator according to any of the previous claims **characterized in that** it comprises a filtering system (9) wherein the water obtained from an at least partial condensation of said mixture (M) internally to said heat exchanger (6) is conveyed; said water, after being filtered, is used to feed said heat exchanger (6) or said five-way mixer (18).

9. The mechanical energy generator according to any of the previous claims **characterized in that** it at least partially uses a different coolant instead of water, so that said coolant (F) flows in said pipe (22) and in said pipe (7), and steam is not produced directly by the thermal set, but rather via a second heat exchanger (10), fed with water; said coolant (F) is delivered, via the pipe (7), to said second heat exchanger (10), wherein it yields thermal energy to the input water, in order for it to be subsequently conveyed to the pipe (22); said water gets hotter by absorbing heat from the coolant (F) and is at least partially transformed into steam and is input to said heat exchanger (6), wherein it gets further hotter by absorbing heat from the mixture (M) expelled by the turbomachinery (4), in order for it to be subsequently injected into the expander (3).

10. The mechanical energy generator according to any of the previous claims **characterized in that** mechanical energy is produced by said turbomachinery (4) only, whereas said engine (2) produces thermal energy only.

11. The mechanical energy generator according to any of the previous claims, **characterized in that** said endothermic engine (2) comprises a stator (211) with a cylindrical chamber that accommodates internally thereto a cylindrical rotor (212); at least two blades (213) protrude from said rotor (212).

12. The mechanical energy generator according to claim 11

characterized in that said blades (213) slidingly protrude from said rotor (212) and the distal end of said blades (213) is pushed against the inner lateral surface of said stator (211) by the action exerted by appropriate elastic thrust means (214).

13. The mechanical energy generator according to claim 12 **characterized in that** said blades (213) run from said rotor (212) radially.

14. The mechanical energy generator according to any of claims 11 thru 13 **characterized in that** devices for igniting the mixture of fuel and comburent air are present on the inner walls of said stator (211).

15. The mechanical energy generator according to any of claims 11 thru 14 **characterized in that** fuel injection devices are present on the inner walls of said stator (211).

16. The mechanical energy generator according to any of claims 11 thru 15 **characterized in that** said cylindrical rotor (212) rototranslates with respect to said stator (211), so that the longitudinal axis of symmetry of said rotor (212) describes, in its movement, the lateral surface of a cylinder, and the directrices of the outer lateral surface of the rotor (212) brush against the directrices of the inner lateral surface of said stator (211).

17. The mechanical energy generator according to claim 16 **characterized in that** an exhaust port (215) and an input port (216) are defined on the base walls of said stator (211) and are opened and closed by said rotor (212) upon its passage.

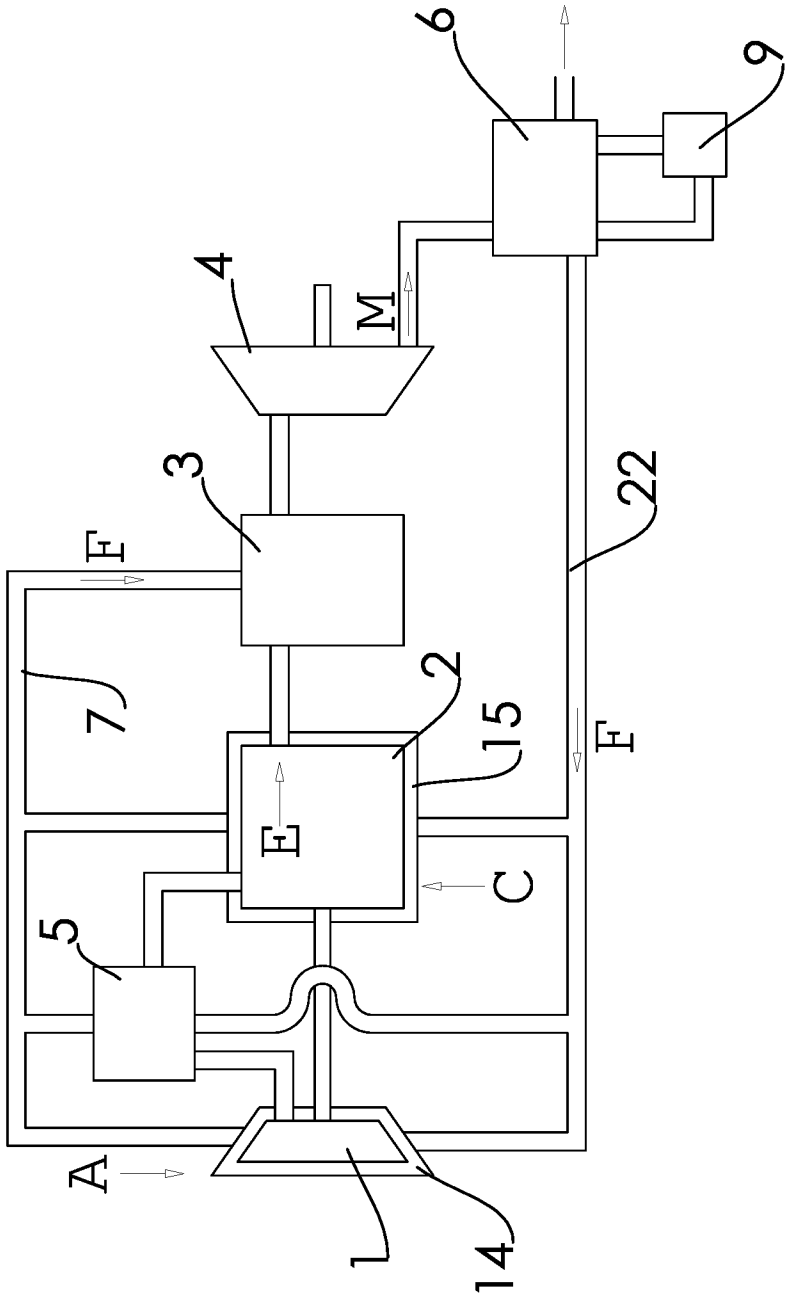

FIG. 1

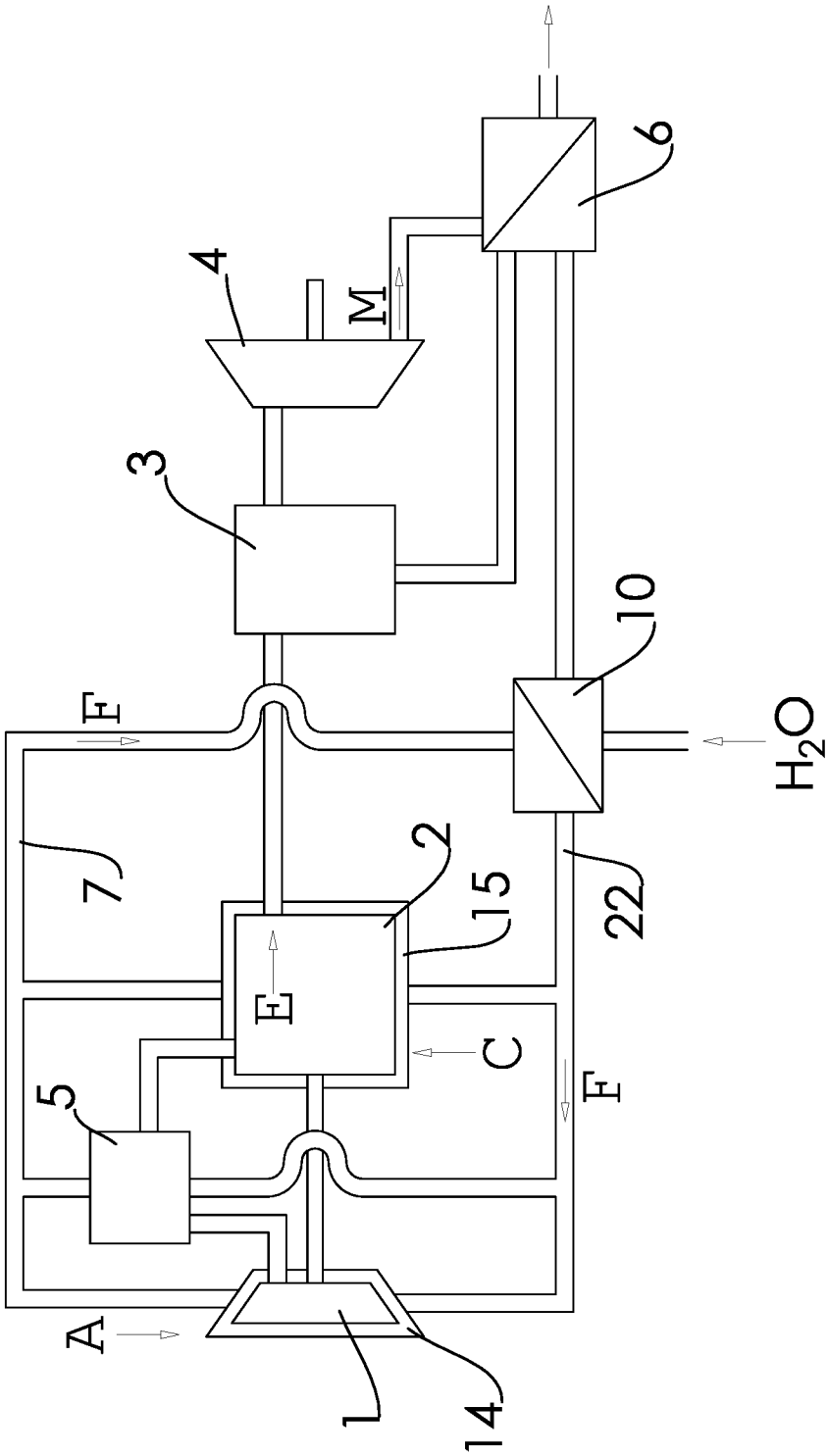

FIG. 2

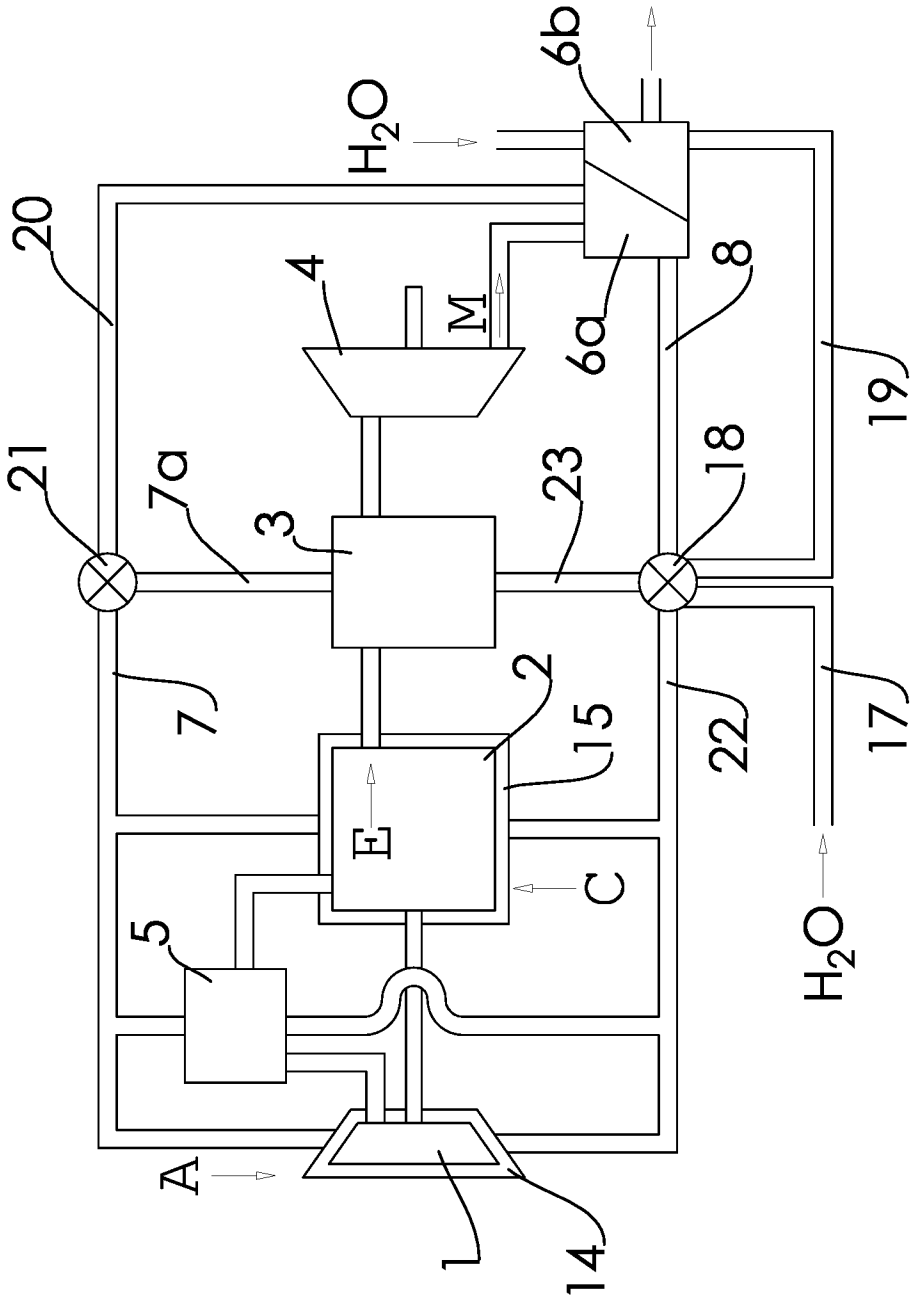

FIG. 3

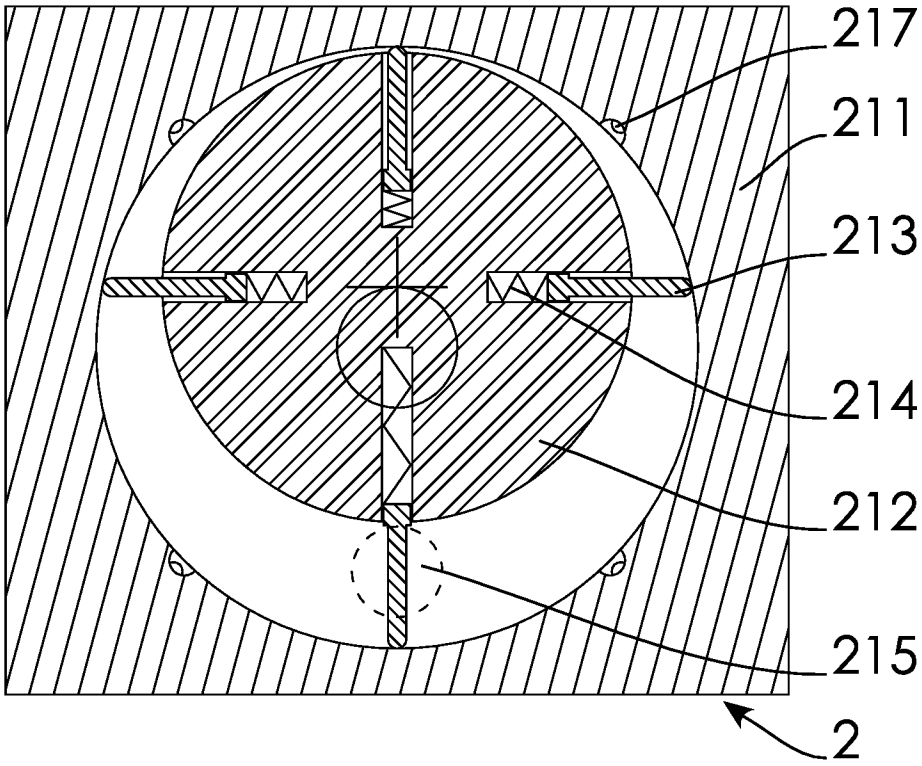

FIG. 4

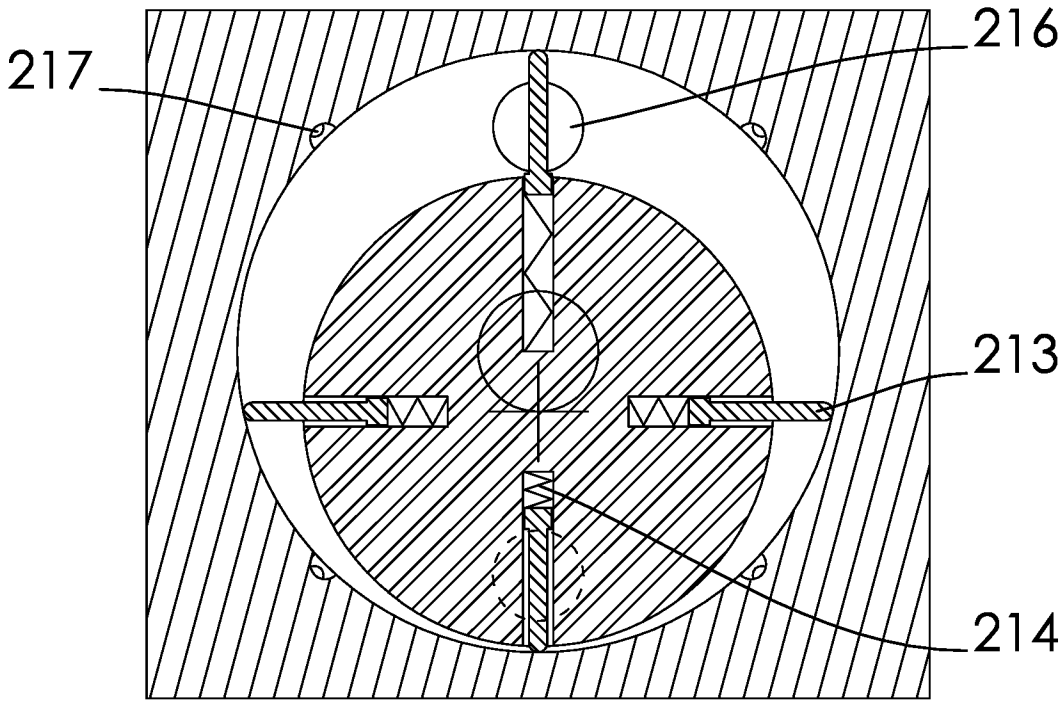

FIG. 5

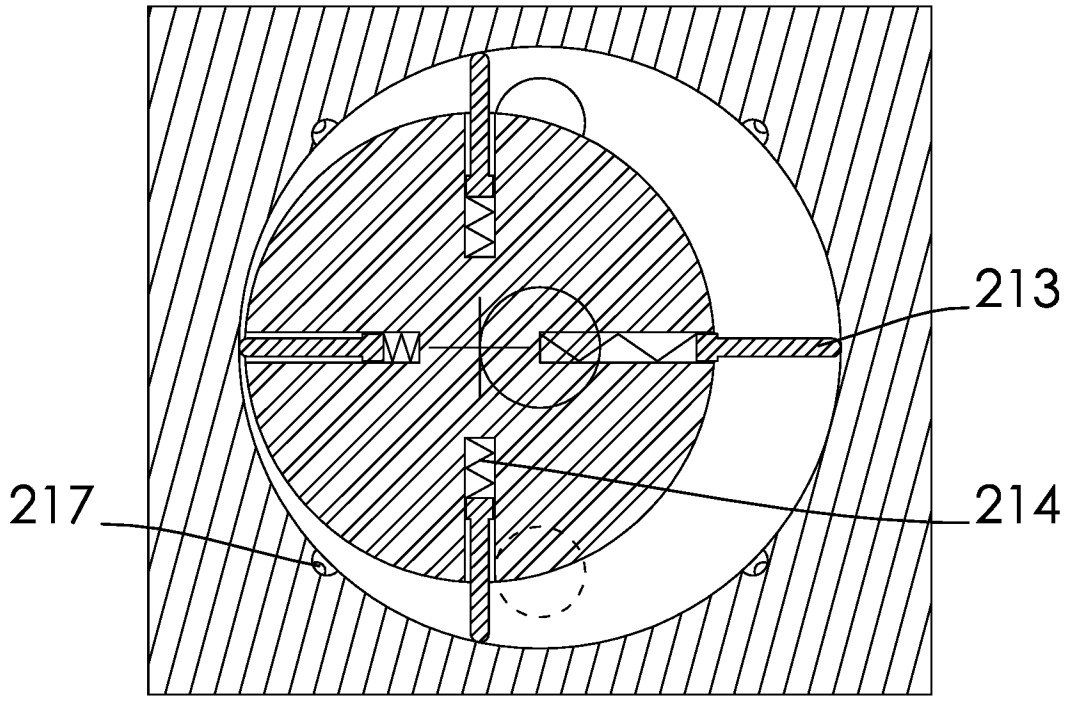

FIG. 6

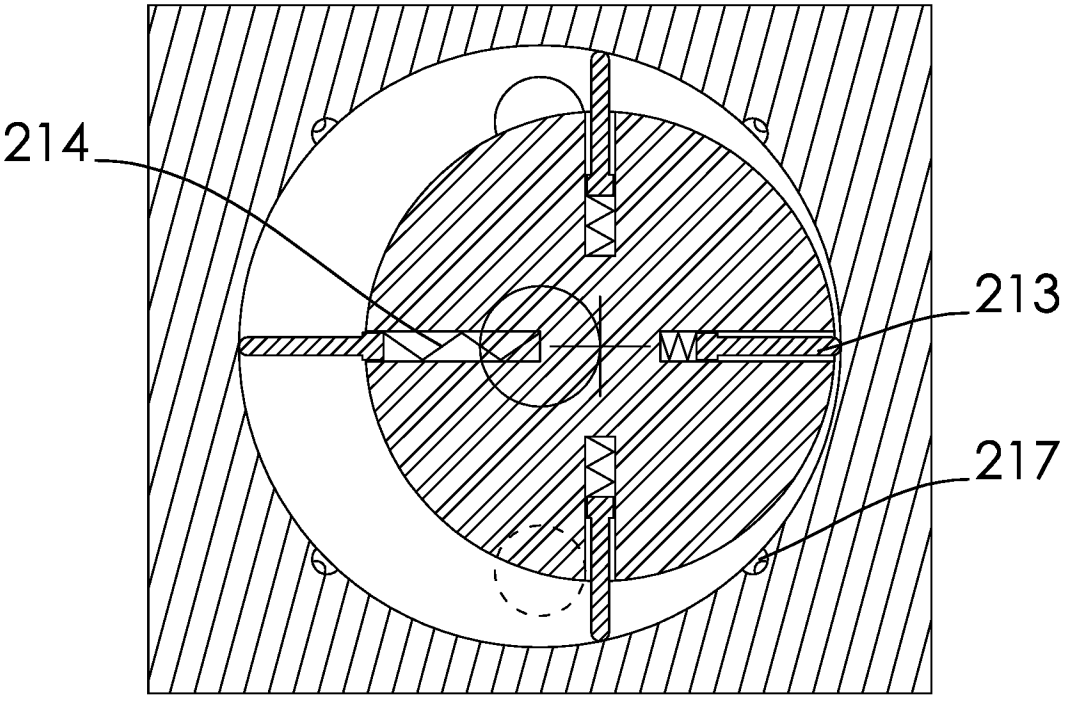

FIG. 7

INTERNATIONAL SEARCH REPORT

International application No
PCT/IT2020/050007

A. CLASSIFICATION OF SUBJECT MATTER
INV. F01K21/04 F01C1/344
ADD.

According to International Patent Classification (IPC) or to both national classification and IPC

B. FIELDS SEARCHED

Minimum documentation searched (classification system followed by classification symbols)
F01K F01C

Documentation searched other than minimum documentation to the extent that such documents are included in the fields searched

Electronic data base consulted during the international search (name of data base and, where practicable, search terms used)

EPO-Internal, WPI Data

C. DOCUMENTS CONSIDERED TO BE RELEVANT

Category*	Citation of document, with indication, where appropriate, of the relevant passages	Relevant to claim No.
X Y	GB 2 541 018 A (GEORGE JOSEPH [GB]) 8 February 2017 (2017-02-08) abstract; figure 1 page 1, lines 3-6 page 2, lines 6-10 page 7, line 1 - page 11, line 5 page 13, lines 16-22 page 14, lines 22-32 page 18, lines 11-34	1-10 11-17
X	DE 10 2007 049366 A1 (HILLE BERND [DE]) 9 April 2009 (2009-04-09) abstract; figures 1, 2 paragraphs [0001] - [0006], [0010], [0016], [0023], [0032], [0033], [0037], [0038]	1-10

-/--

[X] Further documents are listed in the continuation of Box C.

[X] See patent family annex.

* Special categories of cited documents :

"A" document defining the general state of the art which is not considered to be of particular relevance

"E" earlier application or patent but published on or after the international filing date

"L" document which may throw doubts on priority claim(s) or which is cited to establish the publication date of another citation or other special reason (as specified)

"O" document referring to an oral disclosure, use, exhibition or other means

"P" document published prior to the international filing date but later than the priority date claimed

"T" later document published after the international filing date or priority date and not in conflict with the application but cited to understand the principle or theory underlying the invention

"X" document of particular relevance; the claimed invention cannot be considered novel or cannot be considered to involve an inventive step when the document is taken alone

"Y" document of particular relevance; the claimed invention cannot be considered to involve an inventive step when the document is combined with one or more other such documents, such combination being obvious to a person skilled in the art

"&" document member of the same patent family

Date of the actual completion of the international search	Date of mailing of the international search report
17 April 2020	04/05/2020

Name and mailing address of the ISA/	Authorized officer
European Patent Office, P.B. 5818 Patentlaan 2 NL - 2280 HV Rijswijk Tel. (+31-70) 340-2040, Fax: (+31-70) 340-3016	Durante, Andrea

2

Form PCT/ISA/210 (second sheet) (April 2005)

C(Continuation). DOCUMENTS CONSIDERED TO BE RELEVANT

Category*	Citation of document, with indication, where appropriate, of the relevant passages	Relevant to claim No.
Y	CN 105 756 714 A (LIU HUANYING) 13 July 2016 (2016-07-13) the whole document	11-17
A	EP 2 803 834 A1 (SCANIA CV AB [SE]) 19 November 2014 (2014-11-19) abstract; figures 1, 2 paragraphs [0002] - [0007], [0017] - [0025]	1-10
A	WO 2009/086187 A2 (GREEN PARTNERS TECHNOLOGY HOLD [US]; MESSMER HANS-PETER [AT]) 9 July 2009 (2009-07-09) figure 32 page 87, line 10 - page 88, line 11	1-10

2

INTERNATIONAL SEARCH REPORT

Information on patent family members

International application No
PCT/IT2020/050007

Patent document cited in search report	Publication date	Patent family member(s)	Publication date
GB 2541018 A	08-02-2017	GB 2541018 A	08-02-2017
		WO 2017021737 A1	09-02-2017
DE 102007049366 A1	09-04-2009	NONE	
CN 105756714 A	13-07-2016	NONE	
EP 2803834 A1	19-11-2014	EP 2803834 A1	19-11-2014
		SE 1350391 A1	28-09-2014
WO 2009086187 A2	09-07-2009	BR PI0821738 A2	16-06-2015
		CA 2710279 A1	09-07-2009
		EP 2235342 A2	06-10-2010
		JP 2011508138 A	10-03-2011
		KR 20100096252 A	01-09-2010
		US 2009314005 A1	24-12-2009
		WO 2009086187 A2	09-07-2009