US00D334592S

United States Patent [19]

Nghi

[11] Patent Number: Des. 334,592

[45] Date of Patent: ** Apr. 6, 1993

[54] **STATIONERY SUPPLY BOX "OFFICE BOX"**

[76] Inventor: **Bui Duc Nghi**, Box 633, Quathiaski Cove, British Columbia, Canada, V0P 1N0

[**] Term: **14 Years**

[21] Appl. No.: **636,369**

[22] Filed: **Dec. 31, 1990**

[52] **U.S. Cl.** **D19/27**

[58] **Field of Search** ..... D19/27; 402/80 P, 75; 206/387, 215, 45.13, 45.18; D9/326; 40/391

[56] **References Cited**

U.S. PATENT DOCUMENTS

D. 175,722	10/1955	Box	D9/326
D. 269,853	7/1983	Springett	D9/326
D. 304,008	10/1989	Hornung	D9/326
D. 317,977	7/1991	Felkner et al.	D19/26
1,646,632	10/1927	Spinner	D9/326
4,294,558	10/1981	Errichiello	206/215
4,765,462	8/1988	Rose, Jr.	206/45.13

Primary Examiner—Wallace R. Burke
Assistant Examiner—Melody Brown
Attorney, Agent, or Firm—Richard L. Miller

[57] **CLAIM**

The ornamental design for a stationery supply box "office box", as shown.

DESCRIPTION

FIG. **1** is a perspective view of a stationery supply box "office box" showing my new design;
FIG. **2** is an enlarged bottom plan view thereof;
FIG. **3** is an enlarged top plan view thereof;
FIG. **4** is an enlarged rear end elevation view thereof, taken along arrow **4** in FIG. **3**;
FIG. **5** is an enlarged front end elevation view thereof, taken along arrow **5** in FIG. **3**;
FIG. **6** is an enlarged left side elevation view thereof, taken along arrow **6** in FIG. **3**; and,
FIG. **7** is an enlarged right side elevation view thereof, taken along arrow **7** in FIG. **3**.

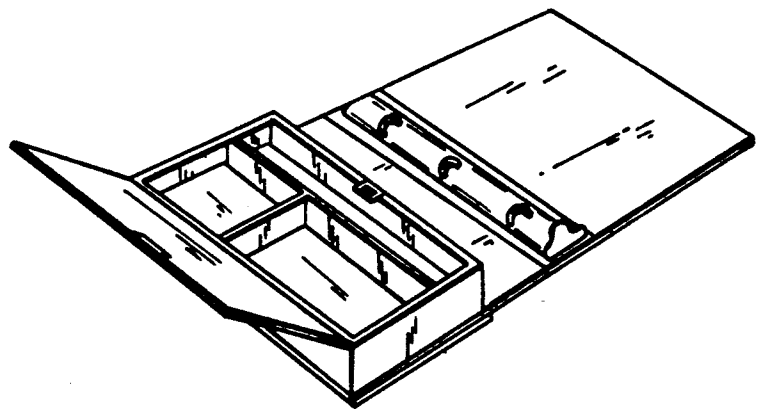

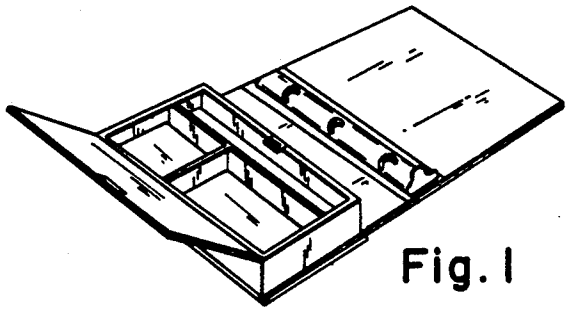

Fig. 1

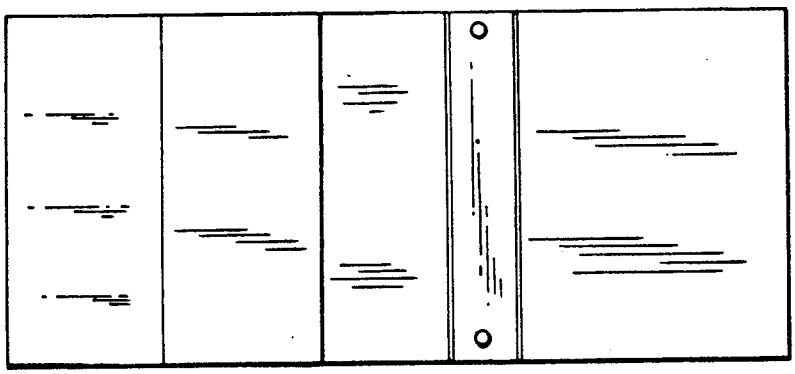

Fig. 2



Fig. 6

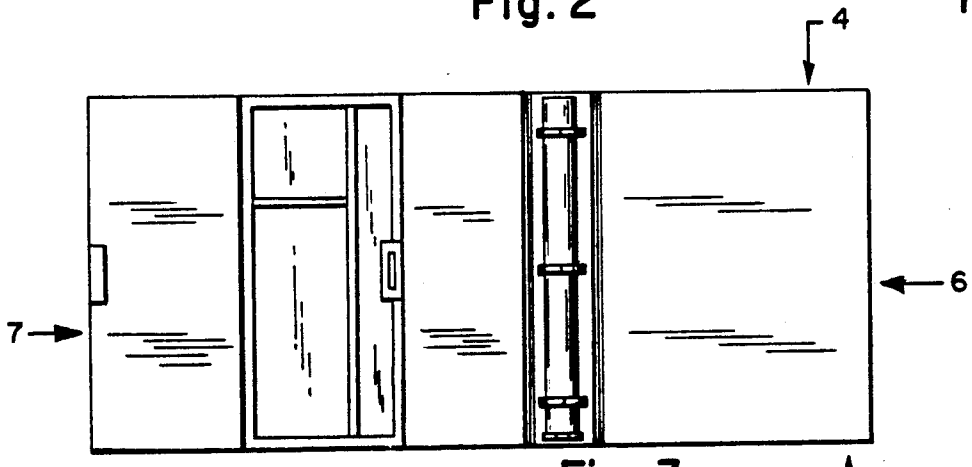

Fig. 3



Fig. 7



Fig. 4



Fig. 5