April 22, 1930. P. A. DAVIS, 3D 1,755,917

BANK COUNTER

Filed Sept. 17, 1928 2 Sheets-Sheet 1

Fig. 1.

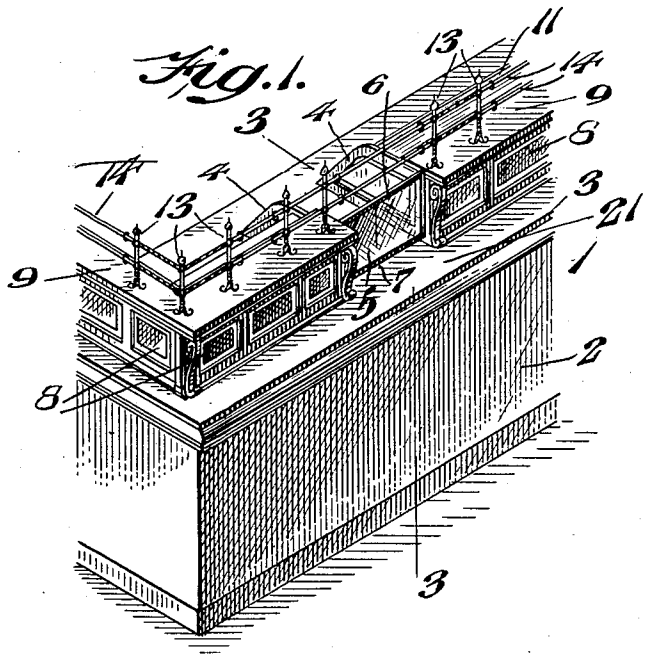

Fig. 2.

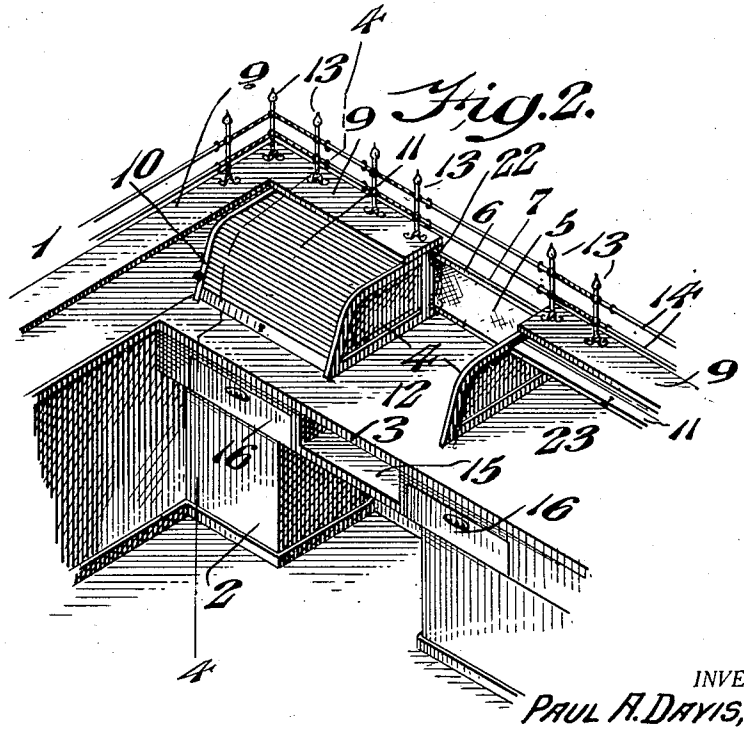

INVENTOR.
PAUL A. DAVIS, 3D

BY
Wiedersheim & Fairbanks
ATTORNEYS.

April 22, 1930. P. A. DAVIS, 3D 1,755,917

BANK COUNTER

Filed Sept. 17, 1928 2 Sheets-Sheet 2

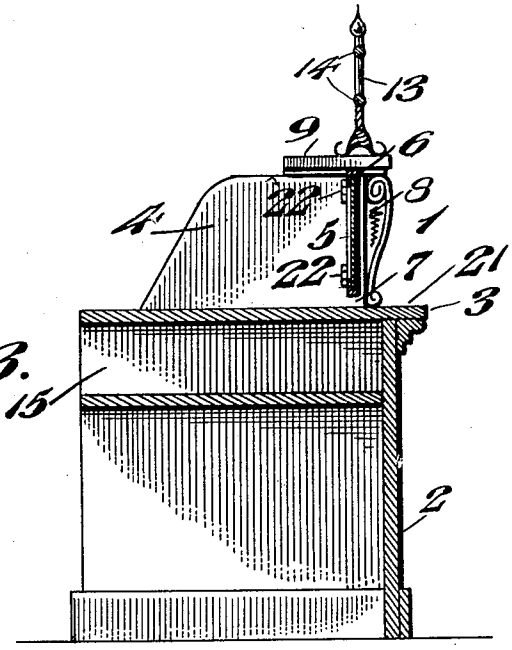

Fig. 3.

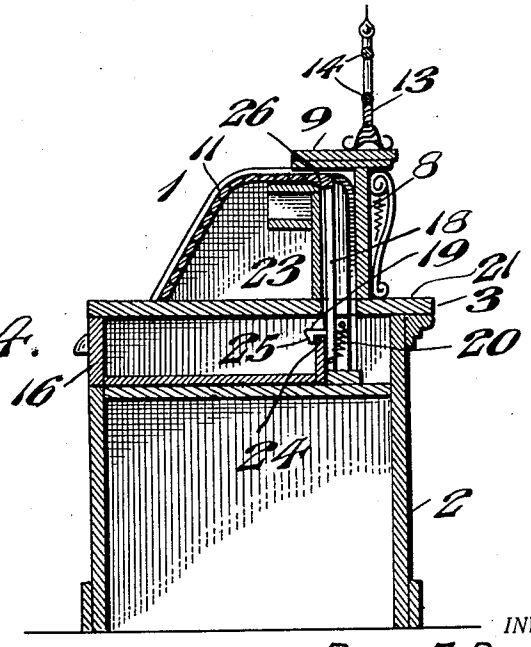

Fig. 4.

INVENTOR.
PAUL A. DAVIS, 3D

BY
Wiedersheim & Fairbanks
ATTORNEYS.

Patented Apr. 22, 1930 1,755,917

UNITED STATES PATENT OFFICE

PAUL A. DAVIS, 3D, OF PHILADELPHIA, PENNSYLVANIA, ASSIGNOR TO DAVIS, DUNLAP & BARNEY, A PARTNERSHIP COMPOSED OF PAUL A. DAVIS, 3D, M. EDMUNDS DUNLAP, AND WILLIAM POPE BARNEY, OF PHILADELPHIA, PENNSYLVANIA

BANK COUNTER

Application filed September 17, 1928. Serial No. 306,389.

In the design and construction of banking rooms and banking counters it is necessary and desirable that easy access for the convenience of bank officers and the public should be combined with safety against possible robberies and hold-ups. Under modern business conditions, it is also desirable to permit of the development of personal contact between the bank officers and the public with a view of developing good will and facilitating and increasing business. It is furthermore necessary to devise a construction which while providing all of the above requisites, will also afford sufficient light and air and present an artistic, dignified and ornate appearance consonant with the character of business carried on.

Various attempts to devise bank counter constructions and banking room equipment have been made but none of them seem to have wholly solved the problem efficiently, since by providing the necessary degree of safety, the cages or stalls of bank tellers and other officers tended to give the impression of barred cells and placed the public at large in the embarrassing position of being distrusted. There was further created a gloomy atmosphere for the bank officers to work in and greatly hampered communication between the officers and the public with attendant disadvantages.

Other equipment heretofore devised resulted in concealing from view the activities of a bank officer, so that when a depositor handed the teller cash to deposit, he could not see the teller counting the money, so that if a difference in the count resulted, it would be difficult to determine whether the depositor or the teller was in error. The same condition arose when money was handed by the teller to the depositor, when money was withdrawn.

Still other equipment heretofore known and used, in addition to the disadvantages heretofore enumerated, failed to provide means for protecting securities while the teller was otherwise occupied or after closing hours, it being necessary to remove such securities to a place of safety such as a safe, vault or the like. Other constructions of banking rooms or bank equipment have been rather complicated and expensive and occupied excessive room.

It is the object of my present invention to provide a banking room construction, which will enable both the tellers and customers clearly to note and observe each other's activities thus saving time in eliminating the necessity of recounting and checking up and affording ample opportunity for communication and the establishment of friendly personal contact, which is desirable and essential for success in modern business.

Another object of this invention is to provide a neat, and artistic construction or enclosure which at the same time provides adequate privacy and safety against banditry and which affords the officers of the bank adequate light and ventilation.

A still further object of my invention is to provide means for securely locking the money and other securities handled by the teller in the teller's stall or cage without the necessity of removing the same to other, distant places of safety, thus effecting a saving of time and increasing the efficiency of operation.

A still further object of my invention is the provision of a construction of a bank counter wherein the teller will be secured in his privacy, and his funds at all times well guarded; the teller's working position being sufficiently close to the customer for the mutual recognition and ease of conversation, and every convenience and facility afforded the teller for his comfort, working space, light and ventilation.

My novel invention further provides so far as regards the customer for his maximum convenience and despatch of business, and further assurance that his transactions may not be subjected to the inspection of other customers nearby, thereby conserving the customer's time and avoiding confusion.

To the above ends my invention consists of a novel bank counter for use in banking and similar establishments, comprising an upright lower wall or support forming an enclosure, an enlarged shelf or counter carried by said support, the outer portion of said shelf being available for the use of the public

and the inner portion or maximum horizontal area of said shelf forming the working counter for the bank officer or teller, a guard or wall or a panelled riser superimposed upon said shelf and set back from the outer edge thereof, a swinging gate or wicket in said guard, which when open is adapted to permit the passage of bulky articles, such as satchels of bullion or large rolls of bills, side drawers formed in the bottom of said counter for keeping the money and securities on hand, a central shelf adapted to receive a pistol or other weapon for use in an emergency and a roll top desk arrangement on either side of said gate or wicket adapted to be closed over the teller's working counter which latter serves as a base for the roll top and is operatively connected to said money drawers, so that by closing the roll tops over the counter the money drawers are locked simultaneously.

My invention further consists of various other novel features of construction and advantage all as hereinafter described and claimed.

For the purpose of illustrating my invention I have shown in the accompanying drawings one form thereof which is at present preferred by me, since the same has been found in practice to give satisfactory and reliable results, although it is to be understood that the various instrumentalities of which my invention consists can be variously arranged and organized and that my invention is not limited to the precise arrangement and organization of the instrumentalities as herein shown and described.

In the accompanying drawings:—

Figure 1, represents a front perspective view of a banking room counter, viewed from the outside, embodying my invention.

Figure 2, represents a rear perspective view of the same viewed from the inside.

Figure 3, represents a vertical sectional view taken on line 3—3 of Figure 1.

Figure 4, represents a vertical sectional view on line 4—4 of Figure 2.

Referring to the drawings in which like reference characters indicate like parts, 1 designates a cageless bank counter, embodying my invention comprising the base portion 2 which supports the upper horizontal elongated shelf or counter 3, which may be of wood, metal or the like and which may be suitably decorated to harmonize with the surrounding fixtures. 4 designates parallel transverse vertical panels or walls secured to the top of the counter 3 and having their outer ends bridged by the hinged gate or wicket 5 of any suitable transparent material such as bullet proof glass or the like, carried by the frame composed of vertical end members and the transverse upper and lower horizontal members 6 and 7, the latter being spaced above the top of the counter 3, as will be understood from Figure 3. Supported on the shelf 3 and slightly set back from the outer edge thereof, is the upright panelled wall or vertical riser 8, having the rearwardly extending flat top or upper surface 9 between which and the transverse walls or panels 4 and 10, are formed the roll top desks 11, best seen in Figure 2. Between the walls 4 of the roll top desks is formed the compartment or teller's counter 12 for the teller to attend to his duties. On the horizontal wall 9 are secured the posts 13, which preferably terminate in spikes and which in conjunction with the horizontal rails or rods 14 form a protective grille, it being understood that said grille may be provided with a wire mesh, silk or fabric screen if so desired. Below the roll top desks 11 and formed in the bottom of the shelf or counter 3 are the cash or money drawers 16 between which I provide a pigeon hole or shelf 15 where a fire arm may be kept for emergency use. The roll top desks 11 are operatively connected to the cash drawers 16 by the upright sliding rod 18 seen in Figure 4, having the hook member 19, which engages the rear edge 24 of the drawer 16, when the roll top desk is closed (see Figure 4) the drawer being released by the action of the spring 20 when the roll top desk is opened in the usual manner.

It will be understood from Figure 4, that when the edge 24 abuts against the inclined nose 25 of the dog or hook 19 when the drawer 16 is closed, that the hook 19 will be raised against the tension of the spring 20. When the roll top is opened or pushed inwardly, the inner thickened slat 26 leaves the top end of the rod or bar 18 allowing the latter to rise, whereupon the hook 19 moves out of engagement with the edge 24, so that the drawer 16 can be readily opened directly upon opening the coacting top of the roll top desk above.

It will be understood that any other suitable mechanism for simultaneously effecting the opening and closing or locking of the roll top desks and the cash drawers 16 may be employed. The outer portion 21 of the counter 3, overhanging the base portion 2, forms a convenient working shelf on which a customer can lay a package while endorsing a check or counting his cash, while the inner greater portion or area gives the teller ample room to do his work.

The transparent gate or wicket 5 is hinged as at 22 and can be readily swung open by the teller to permit the insertion of bulky articles such as books, satchels of bullion or large rolls of bills or the like. The compartments 23 covered by the tops of the roll top desks 11 afford convenient working room for the teller's private work, such as tallying sheets, counting cash, sorting checks and other duties. When the teller leaves for the day or when he is temporarily called away, it is merely necessary for him to close the

drawers 16 and pull down and lock the roll top desks 11 without disturbing the valuables and papers or removing the same to any other place of safety.

Among other valuable features of my invention is the provision of the teller's working compartment 12 between the juxtaposed walls 4 of a pair of roll top desks 11, which is convenient, and visible to the teller and the public, the operations of the teller and customer being performed on the same level, that is the top of the counter 3. Thus, if a depositor hands in money for deposit, it is visible while the teller is counting it, since it might otherwise be possible, intentionally or otherwise, for the teller to lose a bank note or two with undesirable results. If on the the other hand, the teller counts the money in full view of the depositor, the chances of a serious dispute are obviously minimized. Similarly when a check is cashed it is desirable for the customer to see the teller count the cash so as to save the necessity of a recount by the customer.

Still another feature of my novel construction is that the height of the posts 13, plus the height of the panelled riser 8, are such as to prevent persons outside the teller's position from reaching over to where the cash and other valuables are kept. On the other hand, the height of the posts alone at the point registering with wicket 5 is not sufficient to prevent the customer or messenger from handing over them to the teller, a satchel or other bulky object which cannot be passed through the wicket, thus saving the necessity of going around the entire counter row of stalls and entering through the back door as is now customary.

A bank counter of my novel construction as illustrated in the drawings affords ample light and air and facilitates the establishment of personal contact between the officers of the institution and the public thus promoting good feeling and good will. Furthermore this construction lacks the appearance of a barred cell which imparts to the customer approaching it a feeling of distrust.

It will be apparent that by my invention, I have provided a cageless bank counter, which is open as distinguished from the conventional closed or cage type, whereby a maximum service can be given to both the bank and its patrons, while at the same time fully conserving the atmosphere of privacy and security essential to present day banking in its relations with the public.

It will be apparent from the foregoing that my novel fixture is relatively low, whereby the customers' shoulders and head are above the fixture and he thereby has a clear and unobstructed vision of the space or room behind the fixture, and he is also enabled to observe the working force, since there is nothing to obstruct either the teller's or the customer's view, and in addition the teller can more quickly and fully identify the customer, since all obstructions are removed and conversation between the teller and customer can be clearly heard so that the customer is served more promptly and efficiently.

The roll top desks 11 are arranged in pairs throughout the counter, so as to afford for each teller a working compartment 12, and the top of the counter 3, serves as the base for all the roll top desks as is evident.

It will be apparent that by my novel construction the next person in line cannot see the name of the depositor in front of him nor the amount of his deposit, nor the name of the maker of the check being cashed, or know anything about any transaction other than his own, which privacy is desirable in all financial and business matters.

It will further be apparent that greater protection is afforded, because a sneak thief can neither reach nor see the money or valuables. In the case of a "hold up," the teller's hands must either go up or stay down. If ordered up, they would instantly become visible to everyone in the bank or office, both in the lobby and behind the counter as there is nothing to obstruct the view. Furthermore, the bandit making the "hold up" could not get the money or valuables in proximity to the teller without the aid of an accomplice or a clerk or without climbing over the counter which act would be practically impossible, as it would leave the criminal in an awkward position and unable to protect himself.

On the other hand, if the bandit ordered the teller to keep his hands down, or to keep quiet, or to hand the money over to him, he could not see the hands of the teller, and therefore would not know whether the teller was getting money or a fire arm.

Furthermore, it will be apparent that a teller is somewhat protected against his own weakness, because any false move could easily be seen by his associates and others in the bank or office, it being well known that many losses in banks are inside jobs. An even distribution of heat and fresh air is had, since everything is low and open and the absence of high cages creates the impression of a larger room, so that a bank or office with a small ground arrangement can produce the effect of a larger room without having to buy more land or build a larger building.

While I have described my invention as being particularly adapted to banks, it is equally applicable to broker's offices, building and loan associations, realtor's offices and the like.

By my novel device the customer has a clear vision of the banking space in the rear, and may readily observe the working force, while his vision to the working counter upon either side of the wicket opening is effectively obstructed by the walls 4 of the roll top desks

11 thereby concealing from vision the money or the like therein.

It will further be noted that while the outer portion 21 of the counter 3 is relatively narrow, inasmuch as its use is to enable the customer to rest thereon books or packages which may not be necessary to his immediate transaction, the area of the inside or rear portion of the counter 3 is considerably enlarged, so as to afford ample space for the teller to perform his duties.

The portions of the upper horizontal shelf 9, which overhang the roll top desk elements, serve as the tops of the latter, and in conjunction with the roll tops, when either closed or partially closed serve to effectively conceal the contents thereof.

I am aware that the invention may be embodied in other specific forms without departing from the spirit or essential attributes thereof, and I therefore desire the present embodiment to be considered in all respects as illustrative and not restrictive, reference being had to the appended claims rather than to the foregoing description to indicate the scope of the invention.

Having thus described my invention what I claim as new and desire to secure by Letters Patent, is:—

1. In a cageless bank counter, a support, a work counter mounted thereon and extending forwardly and rearwardly thereof, an upright riser mounted on said counter, and set back from the forward edge thereof, a plurality of transverse inner walls extending rearwardly from and at right angles to said riser, the forward ends of a pair of said walls being bridged by a transparent wicket hinged to said riser and spaced above said work counter, a pair of outer walls and opposed roll tops arranged upon opposite sides of said wicket, coacting with said pairs of walls and said working counter to form roll top compartments for preventing access to the contents of the latter, the space between a pair of compartments serving as a teller's counter, and inaccessible through said wicket or over said outer walls, and means mounted at the rear of the work counter coactingly engaged with each of said roll tops, and movable in the space enclosed by said risers, said transverse inner walls and the roll tops for lockingly engaging drawers arranged beneath the work counter.

2. In a cageless bank counter, a support, a work counter mounted thereon and extending forwardly and rearwardly thereof, a riser mounted on said counter and set back from the forward edge thereof, an inwardly extending overhanging horizontal top shelf for said riser, a grille carried by said top shelf, a transparent wicket hinged in said riser, spaced pairs of transverse vertical walls extending rearwardly from said wicket and said riser to provide a space of a width substantially equalling the width of said wicket, a pair of spaced opposed outer parallel walls, roll tops coacting with each pair of said vertical walls and said work counter to form roll top compartments for opposite sides of said wicket, means for locking said roll tops when closed and drawers below said work counter in alignment with said roll tops and adapted to be locked when said roll tops are closed, said means including an element mounted at the rear of the work counter coactingly engaged with each of the said roll tops and movable in the space enclosed by said riser, vertical walls, and work counter for releasingly engaging the drawers, whereby access to said roll top compartments cannot be had through said wicket or over said outer walls.

3. In a device of the kind described, in combination a support, a work counter mounted thereon, a vertical riser mounted on the counter and having an inwardly extending grille-supporting shelf overlying a plurality of pairs of vertically positioned spaced walls on the counter secured and in transverse relation to said riser, one of said pairs of spaced walls defining in combination with a wicket hinged in said riser, a teller's compartment, a pair of other compartments within the limits defined by the grille-supporting shelf, the work counter and the pairs of vertically positioned spaced walls, an upright wall in the rear of and spaced from said riser, a pair of roll tops normally closing said pair of other compartments but slidably adjustable to a position between said wall and riser to uncover said other compartments, and drawers coactingly connected to the roll tops, said drawers being arranged below the counter in aligned position with said roll tops.

PAUL A. DAVIS, 3RD.