A. G. F. KUROWSKI.

TYPE WRITING MACHINE.

APPLICATION FILED MAY 10 1912

1,068,787.

Patented July 29, 1913

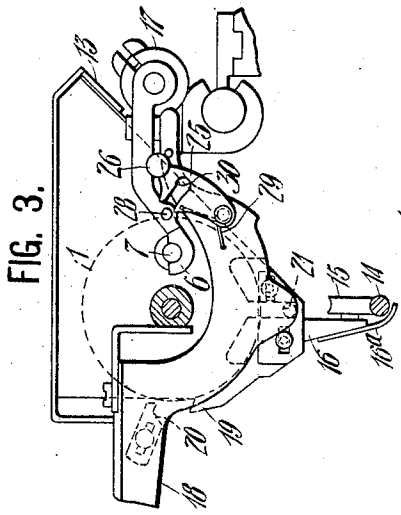

FIG. 3.

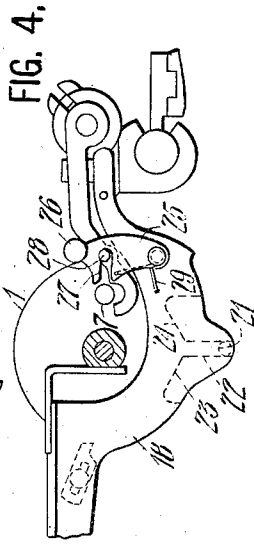

FIG. 4.

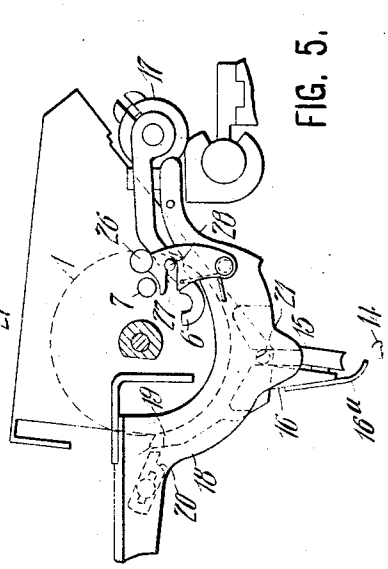

FIG. 5.

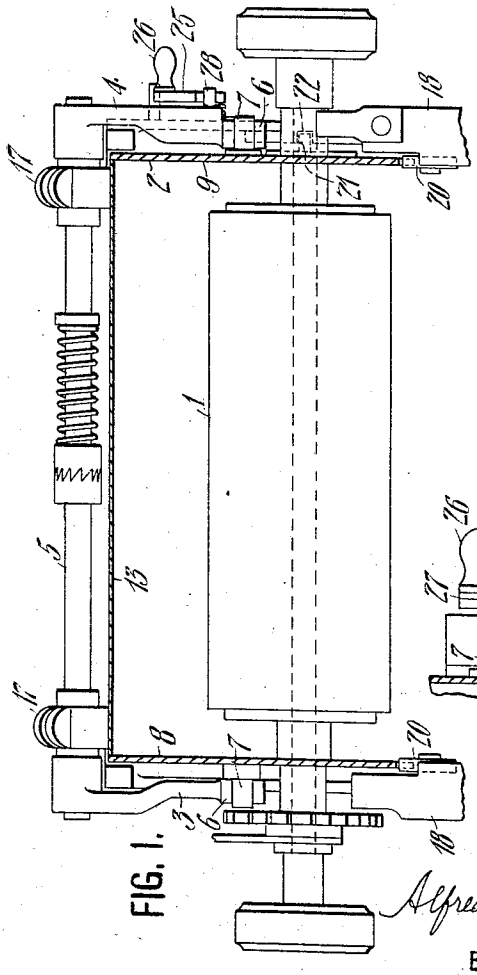

FIG. 1.

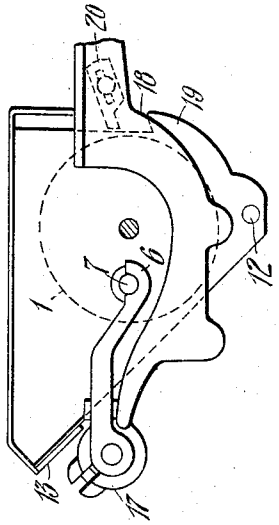

FIG. 2.

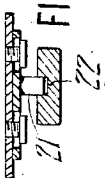

FIG. 7.

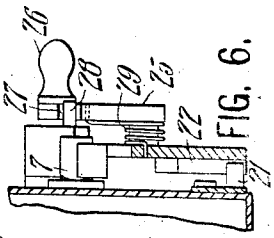

FIG. 6.

WITNESSES:

J. A. Brophy

F. E. Alexander

INVENTOR:

Alfred G. F. Kurowski

BY D. C. Stickney

ATTORNEY

UNITED STATES PATENT OFFICE

ALFRED G. F. KUROWSKI, OF BROOKLYN, NEW YORK, ASSIGNOR TO UNDERWOOD TYPEWRITER COMPANY, OF NEW YORK, N. Y., A CORPORATION OF DELAWARE.

TYPE-WRITING MACHINE.

1,068,787. Specification of Letters Patent. Patented July 29, 1913.

Application filed May 10, 1912. Serial No. 696,297.

To all whom it may concern:

Be it known that I, ALFRED G. F. KUROWSKI, a citizen of the United States, residing in Brooklyn borough, in the county of Kings and State of New York, have invented certain new and useful Improvements in Type-Writing Machines, of which the following is a specification.

This invention relates to typewriter carriages, more specifically to those in which the platen is carried. In the general construction, the carriage runs upon a runway located on the top of the typewriter mechanism, so that the type may come in contact with the paper around the platen held in a frame capable of being raised and lowered to make the proper impressions. As the most repairing and adjusting is required on those parts, being the most active, it necessitates the frequent removal of the platen carriage or frame. In removing the platen frame heretofore, a considerable amount of time was lost in disconnecting the same, then again in replacing and adjusting it.

My object, therefore, has been to provide means for rapidly removing the platen and frame from the carriage; a further object to guide the said frame against dislocation under working conditions; a further object to provide means for rapidly replacing the frame into position without requiring any adjustment.

Other features and advantages will hereinafter appear.

In the accompanying drawings, Figure 1 is a fragmentary view of an Underwood typewriter carriage with my improvements. Fig. 2 is a left end view of the carriage in Fig. 1. Figs. 3, 4 and 5 are right end detail views of the platen carriage in various positions while removing it. Fig. 6 is a front sectional view, showing the guide pin and release hook. Fig. 7 is a detail view of the guide pin and its runway.

The platen 1 of the Underwood typewriter is mounted in a frame 2, shifted up and down by arms 3, 4, fixed on a rock shaft 5, so the type-bars (not shown) may strike the platen to print either capitals or small letters. The arms 3, 4 have open bearings 6 for trunnions 7 on the platen frame 2, said frame comprising ends 8, 9 connected by the tie-rod 12 and a bar 13. The platen frame 2 is raised and lowered by means of a shiftable rail 14, upon which rides a roll 15 on an arm 16 fixed to the platen frame. The usual retaining hook 16^a projects beneath the rail 14. The rock shaft 5 has bearings 17 on the back of the carriage 18. Projections 19 on the platen frame ends may engage stops 20 on the carriage 18. A guide pin 21 is provided on the platen frame to cooperate with arms 3, 4. This pin works in a guide-way 22, and is especially useful in preventing the platen frame from pivoting around the stops 20 when said frame is thrown up. At the top of the guide-way the sides 23, 24 are made flaring to facilitate the introduction of the guide pin 21 into the guide.

Preparatory to removing the platen frame from the carriage 18, the guide arms 3, 4 are lowered by a pivoted arm 25, having a handle 26, and formed with a cam slot 27, by which a pin 28 on the arm 4 is cammed down. When the guide arms are depressed, the platen frame 2 may be tilted back (or to the right as shown in Fig. 5), so the projections 19 can clear the stops 20, whereupon the frame may be raised from the carriage.

To prevent the usual platen-counterbalancing spring 29 from forcing back the arm 25, a seat or notch 30 is formed at the end of the cam slot 27, to catch the pin 28 and lock down the arms 3, 4.

To replace the platen frame, the guide pin 21 is inserted in its guide-way 22, and the hook and roller are positioned about the rail 14. Then the arm 25 is moved back so that the pin 28 on the guide arm 4 is released to allow both guide arms to re-engage the platen frame.

Having thus described my invention, I claim:

1. In a typewriting machine, a carriage, arms movably mounted thereon, a platen mounted on said arms, to shift to different case positions the latter having open bearings, and means for throwing the arms out of engagement with the platen to permit the removal of the platen from the carriage.

2. In a typewriting machine, a carriage, arms movably mounted thereon, a platen mounted on said arms to shift to different case positions, and means for throwing and maintaining said arms out of engagement with the platen, so as to permit the removal of the platen from the carriage.

3. In a typewriting machine, a carriage, a shift frame mounted on said carriage, a

platen mounted in said shift frame, a guide rail, means on said shift frame engaging said guide-rail, and means for releasing the shift frame from its mounting and adapted to permit the tilting of the shift frame to release the engaging means from the guide rail.

4. In a typewriting machine, a carriage, arms journaled on said carriage and having bearings therein, a platen frame mounted in said bearings to shift to different case positions, a movable member mounted adjacent one of said arms and having means for moving said arms out of engagement with the platen frame to permit its removal.

5. In a typewriting machine, a carriage, arms journaled on said carriage and having bearings therein, a platen frame mounted in said bearings to shift to different case positions, an arm mounted adjacent one of the first mentioned arms, and having a pin and slot engagement with said first mentioned arm to move the latter out of engagement with the platen frame.

6. In a typewriting machine, a carriage, arms journaled on said carriage and having bearings therein, a platen frame mounted in said bearings to shift to different case positions, an arm mounted adjacent one of the first mentioned arms, and having a pin and slot engagement with said first mentioned arm to move the latter out of engagement with the platen frame, the slot of this connection having a recess wherein the pin may rest to hold the arms in adjusted position.

7. In a typewriter carriage, the combination of a carriage, a platen frame capable of being raised or lowered with its bearings, means to disconnect said frame from said bearings, and means to hold said bearings while so disconnected.

8. In a typewriter carriage, the combination of a carriage, a platen frame capable of being raised or lowered with its bearings, means for disconnecting and holding said bearings, and means to keep said disconnecting means in an inoperative position.

9. In a typewriter carriage, the combination of a platen frame capable of being raised and lowered with its bearings in the arms of a rock shaft, one of said arms having a projection, and a cam to engage said projection to move said arms to free the platen frame.

10. In a typewriter carriage, the combination of a platen frame capable of being raised and lowered with its bearings in the arms of a rock shaft, one of said arms having a projection, and a cam to move said arms to free the platen frame; said cam having a recess or seat to hold or lock said projection to prevent the arms from returning.

ALFRED G. F. KUROWSKI.

Witnesses:
J. LEVY,
C. NEWELL.

Copies of this patent may be obtained for five cents each, by addressing the "Commissioner of Patents. Washington, D. C."