July 16, 1940. G. W. REED 2,208,054

BRICK PRESS

Filed June 21, 1937 4 Sheets-Sheet 1

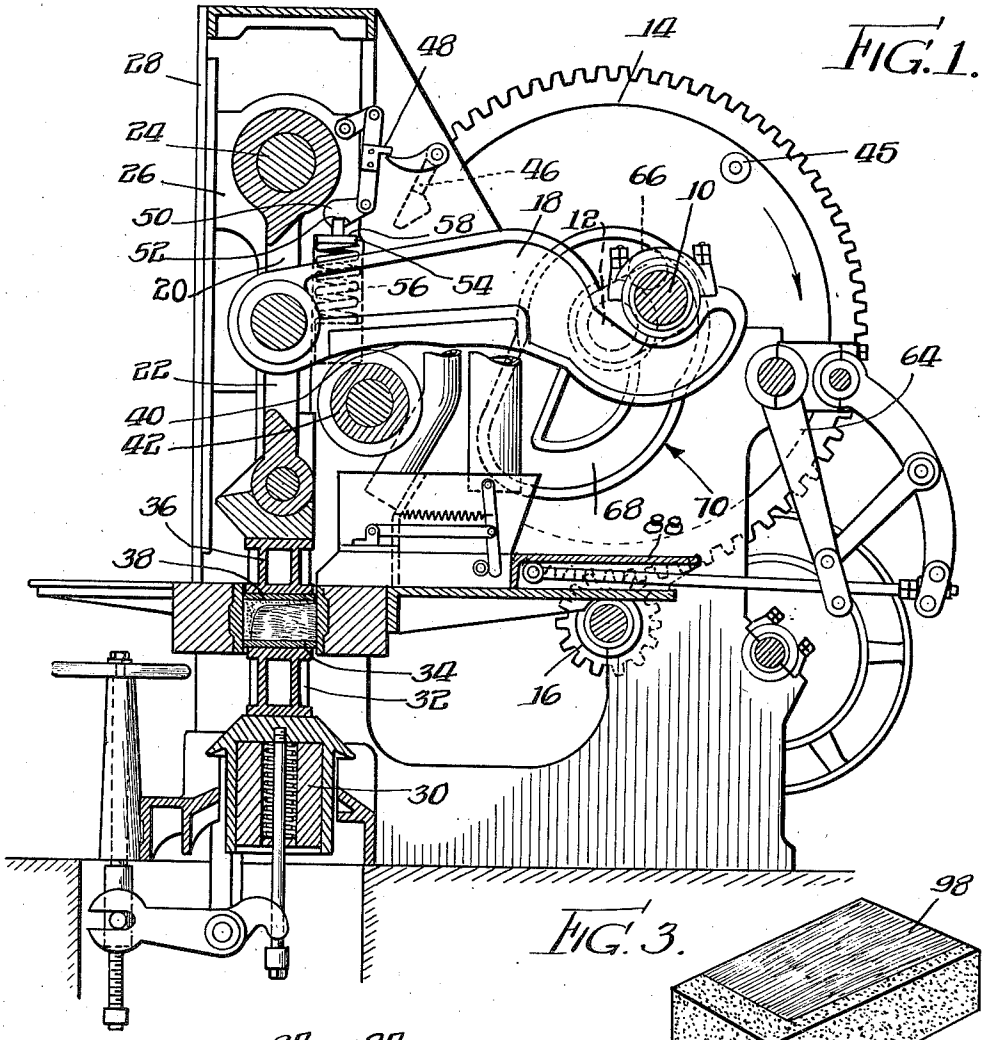

FIG. 1.

FIG. 3.

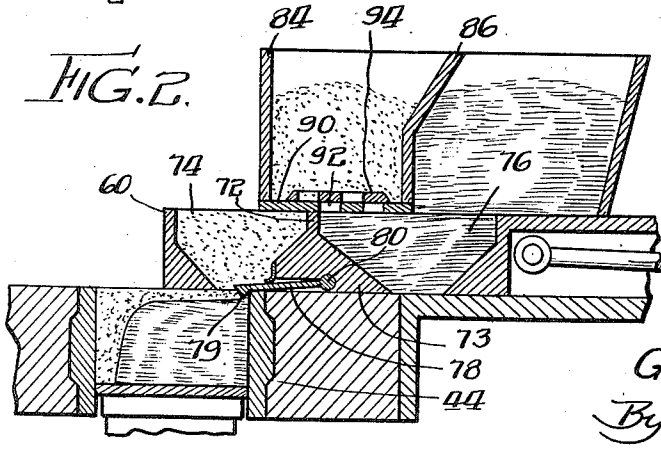

FIG. 2.

Inventor
Gordon W. Reed
By: Cox & Moore
attys.

July 16, 1940. G. W. REED 2,208,054

BRICK PRESS

Filed June 21, 1937 4 Sheets-Sheet 2

FIG. 4.

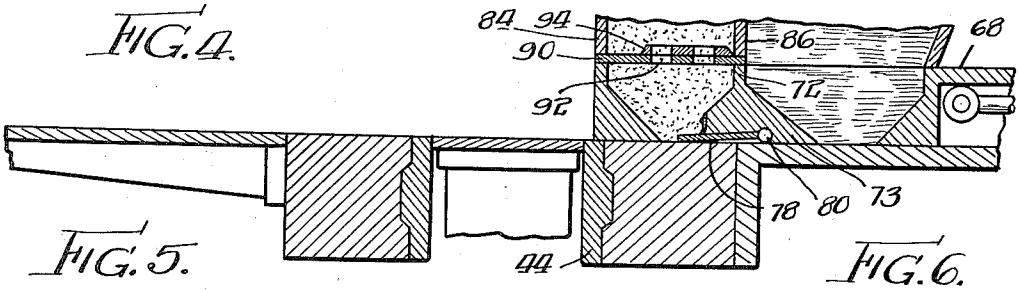

FIG. 5.

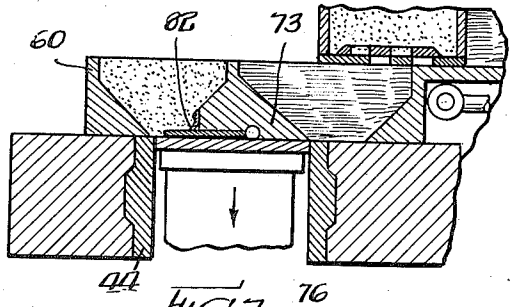

FIG. 6.

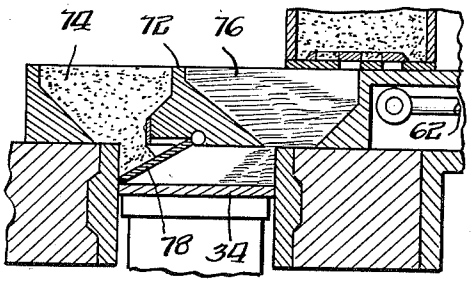

FIG. 7.

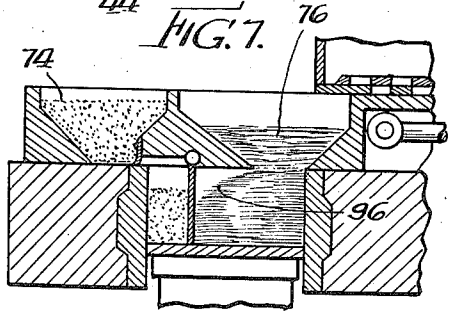

FIG. 8.

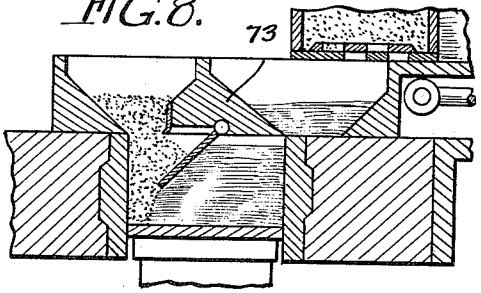

FIG. 9.

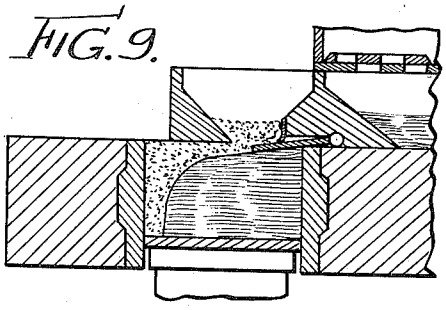

FIG. 10.

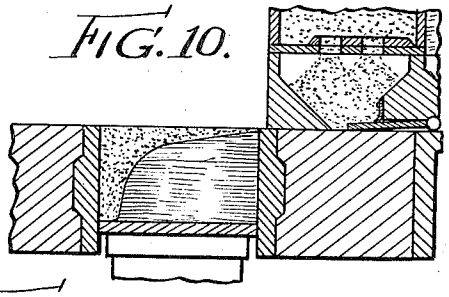

FIG. 11.

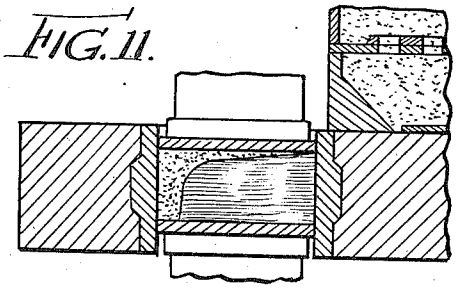

FIG. 12.

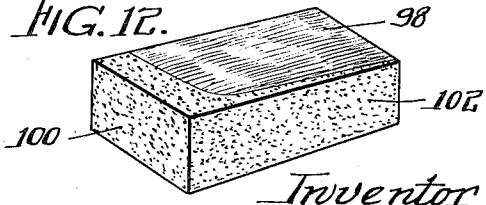

Inventor
Gordon W. Reed
By:- Cox & Moore attys

July 16, 1940. G. W. REED 2,208,054

BRICK PRESS

Filed June 21, 1937 4 Sheets-Sheet 3

FIG. 13.

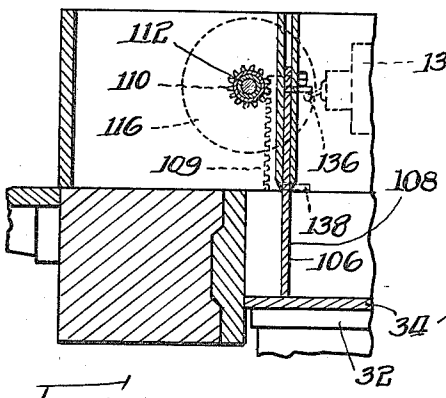

FIG. 14.

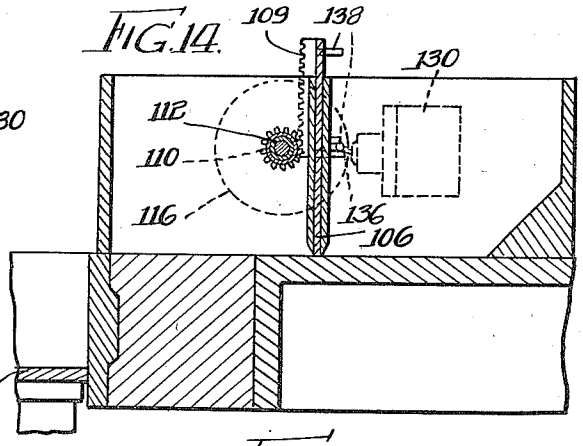

FIG. 15.

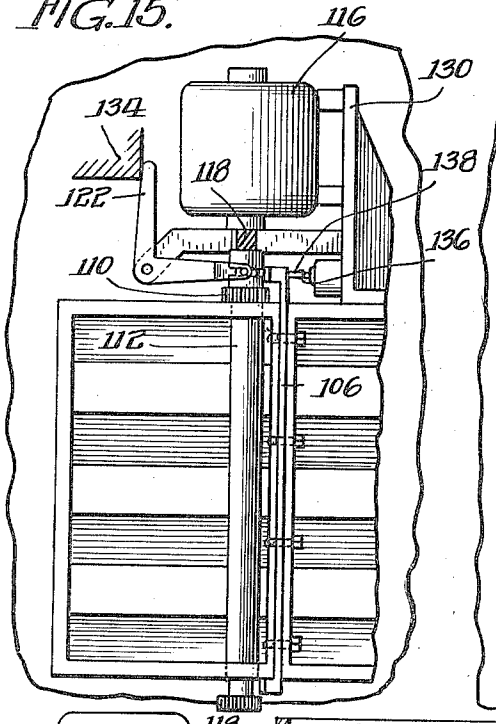

FIG. 16.

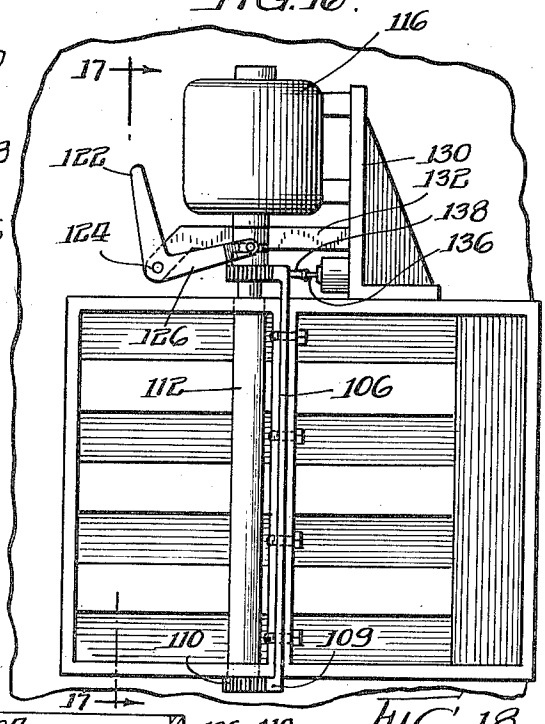

FIG. 17.

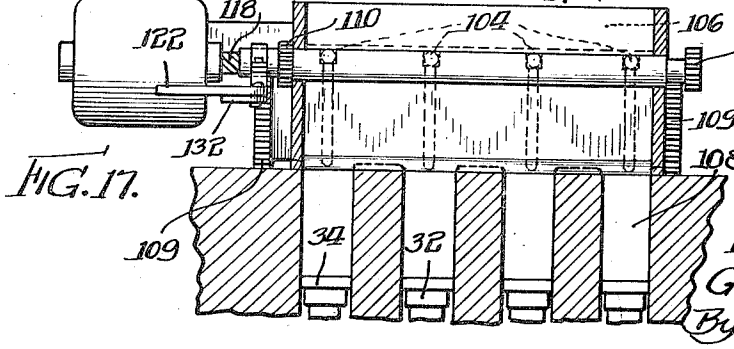

FIG. 18.

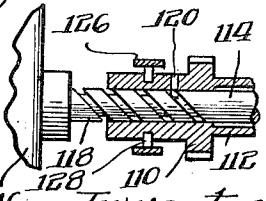

Inventor
Gordon W. Reed
By: Cox & Moore
Attys.

July 16, 1940. G. W. REED 2,208,054

BRICK PRESS

Filed June 21, 1937 4 Sheets-Sheet 4

FIG. 19.

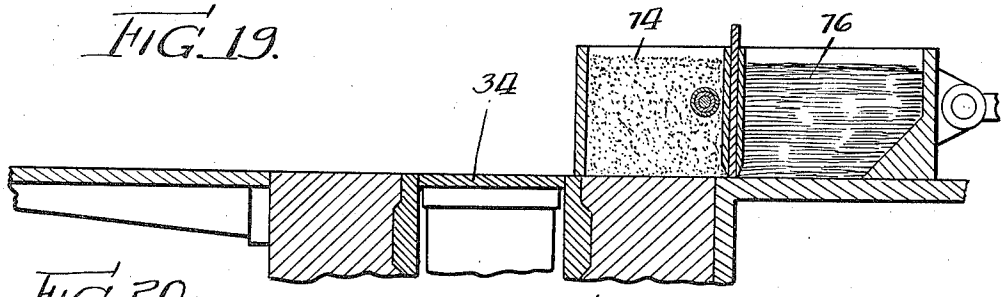

FIG. 20.

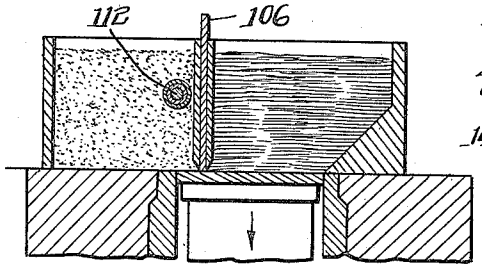

FIG. 21.

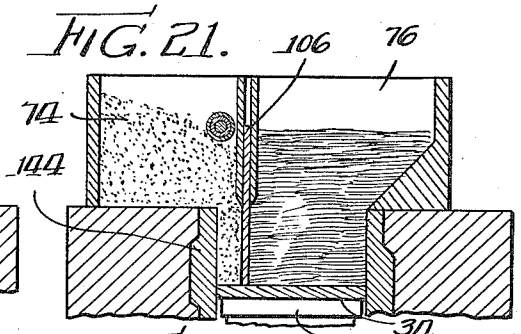

FIG. 22.

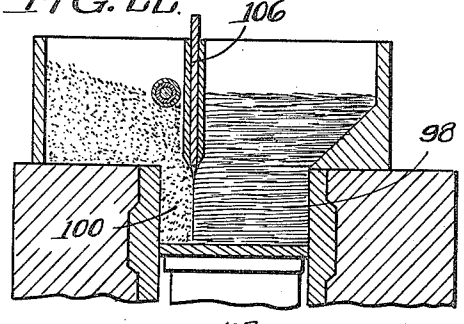

FIG. 23.

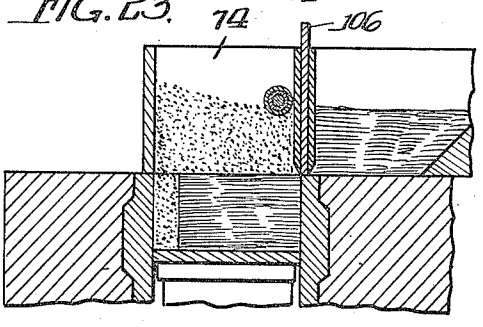

FIG. 24.

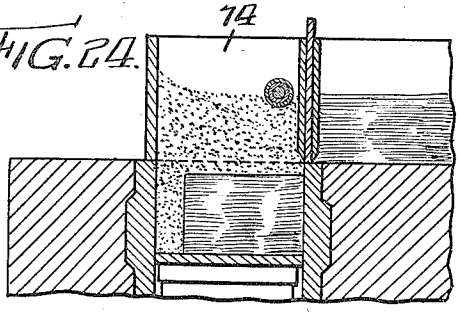

FIG. 25.

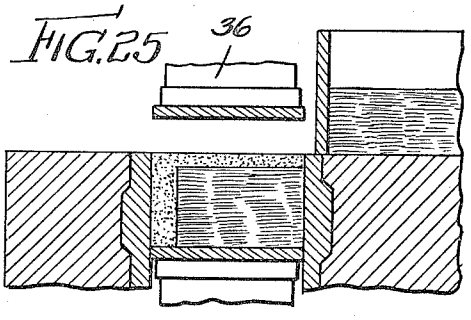

Inventor
Gordon W. Reed
By:- Cox & Moore attys.

Patented July 16, 1940 2,208,054

UNITED STATES PATENT OFFICE

2,208,054

BRICK PRESS

Gordon W. Reed, Greenwich, Conn.

Application June 21, 1937, Serial No. 149,320

14 Claims. (Cl. 25—97)

The instant invention relates to a method and apparatus for making molded objects and more particularly to a device and method for making pressed brick having a composite structure.

It is an object of this invention to provide an improved method and means for manufacturing pressed brick and the like, having end portions of contrasting appearance.

A further object of this invention is to provide means for making a molded article from a plurality of contrasting bodies or raw material in which each type of raw material is separately introduced into a mold in a predetermined position.

Another object of this invention is to provide a method and means for making a pressed brick or the like wherein a contrasting body of brick making clay or the like is introduced and relatively accurately positioned at a zone adjacent one end of the mold and in contact with the main body of brick clay.

A yet further object of this invention is to provide a method and apparatus for manufacturing pressed brick having adjacent surfaces formed of contrasting brick-making material, which, during manufacture, are relatively accurately positioned with respect to the form of the finished brick, but are ultimately pressed and fired or otherwise treated to produce a final structural article having contrasting surfaces.

It is an additional object of the present invention to provide a charging or feeding device for a brick pressing machine which is arranged to deliver to the mold two separate bodies of raw material and to deposit each body automatically in the mold at predetermined positions, maintaining a predetermined line of demarcation between the said bodies in the mold.

Still another object of the present invention is to provide a charging or feeding means which, in combination and in timed relation with the remainder of the pressing machine, causes the individual depositing of contrasting raw materials in the mold having an upstanding, well-defined line of demarcation therebetween and, during the cycle of operation, provides a predetermined layer of contrasting material on the top surface of the material in the mold.

Numerous other objects and advantages will be apparent throughout the progress of the following specification when taken in connection with the accompanying drawings, wherein:

Fig. 1 is a sectional elevation taken through a machine suitable for carrying out the present invention;

Fig. 2 is a detailed sectional elevation through the mold and charging mechanism, showing one form of mold feeding device;

Fig. 3 is a perspective view of a brick made in accordance with the present invention;

Fig. 4 is a more or less diagrammatic sectional elevation of the mold and an alternative type of charging device, showing the position of the parts adjacent the mold at the beginning of a cycle of operation;

Fig. 5 is a view taken the same as above, showing the parts as the charger or feeding member moves forwardly of the press;

Fig. 6 is a view taken the same as above, showing the parts during the dropping of the lower pressing plunger;

Fig. 7 is a view taken the same as above, showing the relationship of the parts at the time the lower plunger has completely dropped and the charger has reached its full forward position;

Figs. 8, 9, 10 and 11 are views taken the same as above, showing the relationship of the parts during various stages of the retraction of the charger and the pressing step;

Fig. 12 is a perspective view, showing the finished brick made in accordance with the above process;

Fig. 13 is a more or less diagrammatic sectional elevation of the charger and mold, showing an alternative type of machine constructed in accordance with the present invention;

Fig. 14 is a view same as above, but showing the parts in an alternative operative position;

Figs. 15 and 16 are top plan views of the structure shown in Figs. 13 and 14, respectively;

Fig. 17 is a view taken on the line 17—17 in Fig. 16;

Fig. 18 is a detailed sectional elevation of the motor shaft, illustrating the drive connection between the shaft and the pinions;

Fig. 19 is a more or less diagrammatic sectional elevation, showing the relationship of the parts at the beginning of the cycle of operation; and

Figs. 20, 21, 22, 23, 24 and 25 are views taken the same as above, but illustrating the relationship of the parts at various selected times successively during the cycle of operations in which the mold is filled and pressing takes place.

The machine comprises generally a crank 10 rigid with a shaft 12 driven by a large gear 14 through a pinion 16. The crank 10 reciprocates and translates a connecting rod 18 for alternately flexing and straightening toggles 20 and

22. The upper ends of the toggles are pivoted to a transverse shaft 24 rigid with side frames 26 sliding in the frame 28 of the machine. A lower cross-head 30 rigid with the side frames is connected through suitable known adjusting structure with a lower plunger 32 having a die-plate 34, while the lower end of the toggles is provided with a movable plunger 36 and an upper die-plate 38. As the crank 10 reaches its lowermost position, the lower cam-shaped edge 40 of the connecting rod 18 fulcrums on the fixed roller 42, whereby the entire frame and associated plungers are lifted upwardly to cause ejection of the pressed article from the mold 44. Further rotation of the crank causes dropping of the frame to its former position and straightening of the toggles to cause a pressing action.

Means is provided to permit the frame and plungers to drop a short distance after the mold has been originally filled for permitting the introduction of a second layer of moldable material thereabove in the mold. This means comprises a roller 45 fixed to the inner face of the gear 14 and adapted to impinge a bell crank 46 rigidly pivoted to the frame of the machine. The bell crank in turn actuates a lug 48 which, through suitable linkage and counter-shafting, rotates cams 50 through a short arc so that the cam depressions 52 are brought above the upstanding spindle portion of the plunger-like supporting member 54. Since normally the frame is supported by this plunger-like member and the spring 56, when this action occurs, the entire frame and plunger and associated mechanism is permitted to drop a distance corresponding to the depth of the cam depressions or the distance between the plunger-like member 54 and the shoulder 58 on the side frames. Immediately after this action has taken place, the members will be in the position indicated in Fig. 1. When the connecting rod is again fulcrumed on the roller 42 to raise the frame and toggles, the weight of the parts will return the cam to its original position.

The charging device comprises a reciprocable dual-chambered frame 60 reciprocated by the rod 62 through the agency of a bell crank 64 pivoted to the frame of the machine and actuated by a follower 66 positioned in the cam slot 68 of the cam 70 rotating rigidly with the shaft 12.

The charger comprises a central transverse partition 72 which thickens progressively toward the base of the charger to form the portion 73, and provides in the charger a forward compartment 74 and a rearward compartment 76 with generally hopper-shaped bottoms. The thickened portion 73 of the partition 72 is machined away adjacent its bottom portion to accommodate the pivoted wall 78 extending transversely across the bottom of the hopper and being of such width as to permit free entry between the side walls of the mold 44 and mounted rigidly on shaft 80 which is pivoted in the charger in side bearings (not shown). During reciprocation, since the plane lower edges of the charger normally rest uniformly upon the flat upper surfaces of the mold table and the lower die-plate, the wall 78 will be maintained in the position shown in Figs. 4 and 5 wherein it extends across a portion of the open bottom of the front compartment 74 of the charger.

A transverse strip 82 of thin, resilient material, such as leather, rubber or flexible metal, is secured along the forward vertical wall of the thickened portion 73 and is pushed outwardly by the pivoted wall 78 when in normal upward retracted position to prevent the clay or brick making material from clogging adjacent the upper surface of the said wall.

The charger is normally fed with raw materials from a hopper 84 rigidly fixed to the frame of the machine and elevated just sufficiently to accommodate the charger thereunder when the latter member is in its rearmost position. The hopper is divided by a partition 86 into two compartments in the said rearward position, registering in perfect alignment with the compartments 74 and 76 of the charger.

An integral table 88, extending rearwardly from the charger, serves to seal off the bottom of the hopper when the charger has moved forward during its cycle of operation. The rear compartment of the hopper is open at the bottom and, in the position shown in Fig. 2, its contents drop freely into the corresponding rear compartment 76 of the charger. The forward compartment of the charger is provided with a plate 90 secured across the bottom and having apertures 92 therein adapted to be selectively opened or closed by means of a slidable gate 94. The gate is connected with suitable linkage and levers on the hopper and actuated by fixed projections on the charger (not shown) to automatically slide the gate 94 to open position when the charger reaches its rearward limit of travel. The gate controlling mechanism, therefore, permits the forward compartment 74 of the charger to be filled with raw material from the corresponding forward compartment of the hopper when the parts are in feeding position, as shown in Fig. 4.

In operation, as the action of the crank 10 of the connecting rod 18 initially flexes the toggles to raise the lower die-plate, the cam slot 68 forces the cam follower 66 radially, actuating its associated mechanism to drive the rod 62 and the charger forwardly and over the lower die-plate, as shown in Fig. 5. As the parts reach the position shown in this figure, lifting of the connecting rod 18 by the crank 10 causes lowering of the entire pressing frame and accordingly the lower die-plate drops with respect to the mold.

As a result the wall 78 is at this time resting solely upon the lower die-plate 34 and as the latter drops, the wall, through its own weight, pivots about the bearings downwardly to the position shown in Figs. 6 and 7, permitting a limited amount of material from the forward compartment of the charger 74 to fall downwardly through the aperture formed between the lower edge of the strip 82 and the forward edge of the mold 44. During this movement the charger continues to its most forward position, as indicated in Fig. 6, the upper end 80 of the wall 78 being carried along to the position indicated.

The wall member 78 is so constructed as to have its limit of counter-clockwise movement in the position shown in this figure. During the forward movement of the charger the wall is permitted to progress forwardly a slight distance after partial filling because the amount of raw material permitted to fall into the space from the hopper 24 is clearly limited by the relatively constricted opening between the strip 82 and the forward edge of the mold.

At this point the limit of the radially extending portion of the cam slot has reached the cam follower and retraction of the charger immediately takes place. Due to the limited opening in the bottom of the rear chamber 76 of the charger,

the portion of the mold rearwardly of the wall 78 will be filled substantially in the manner indicated in Fig. 7, the material at the forward side thereof forming an inclined surface 96. As retraction commences, the wall 78 rides up this inclined surface 96 in the manner shown in Figs. 6 and 7.

Substantially at the time withdrawal of the hopper commences, the roller 45 on the gear wheel 14 impinges the end of the bell crank 46, moving the cams 50 through an arc sufficient to bring the cut-away portions 52 in registry with the stem of the plunger-like support member. Accordingly, the entire frame 26 and associated pressing mechanism drops a predetermined distance as indicated by the space below the portion 73 of the charger, in Fig. 8, permitting space for the application of the veneer to the upper surface of the brick. As further retraction takes place, the wall 78 is finally, through contact with the rear edge of the mold, moved to full retracted position, as indicated in Figs. 10 and 11.

Further actuation of the toggles brings the opposed plungers together to finally press the brick, as indicated in Fig. 11. The brick thus made comprises a main central body portion 98 having an end face of a contrasting lamination 100 and a side face of a contrasting lamination 102, the two laminations being joined interiorly in a relatively curved line.

While the wall 78, shown in Figs. 4 to 11, is formed of sheet material of relatively uniform thickness, the wall forming the alternative preferred embodiment of Fig. 2 is provided with a lug or projection extending along the free lower edge thereof. In using raw materials which may tend to be dragged beneath the retreating edge of the wall, this lug 79 tends to maintain the space at the top of the mold for placing the top layer of material from the chamber 74. The lug 79 is so shaped as to be projected upwardly upon contact with the rear edge of the mold, to permit full retraction of the charger.

According to this invention, it is possible to produce brick having a central portion 98 comprising the main mass of the brick, formed of a relatively inexpensive grade of raw material, while the outer surfaces, provided by the portions 100 and 102, may comprise a raw material, the relative cost of which is so great as normally to prohibit or limit its use in making solid bricks therefrom. Thus in operation the forward hopper, and accordingly the forward compartment 74 of the charger may be fed with a supply of the relatively costly material, while the rear hopper and compartment 76 is supplied with the common brick making clay or the like.

According to the alternative preferred embodiment disclosed in Figs. 13 to 22, means is provided for supplying the mold separately with contrasting bodies of raw material and for dropping a movable partition vertically between the contrasting bodies in order to produce a sharp vertical line of demarcation.

The machine employed may be the same device as that disclosed in illustrating the previous aspect of the present invention, with the exception of the charger, although it will be preferable to vary slightly the timing and co-ordination of the various actions in a manner which will be obvious to anyone skilled in the art after a perusal of the instant specification.

The charger comprises front and rear compartments 74 and 76 respectively, separated by a split partition 72 having opposed side walls connected together by a plurality of welded pins or rivets 104, as indicated in Fig. 17. A gate or partition 106 is arranged to slide vertically between the sides of the split partition.

The gate, as will be apparent from a view of Fig. 13, is formed with a series of downwardly extending tongues or partitions 108. The embodiment disclosed provides for pressing four bricks at each cycle of operation, there being, as shown in the figures, three juxtaposed molds. Each tongue 108 corresponds to one of the molds and is of proper width to fit readily within its respective mold. The pins 104 are situated in slots above the respective partitions or tongues 108 and permit free vertical movement of the gate 106 within predetermined limits. The gate extends laterally beyond the sides of the charger and is provided at each edge with forwardly and vertically extending racks 109. Each rack is normally engaged by a respective pinion 110 secured rigidly to a sleeve 112 and mounted for rotation upon the shaft 114 of the electric motor 116. Adjacent the motor a relatively steep spiral groove 118 in the motor shaft 114 is engaged by a tooth or thread segment 120 formed rigidly on the interior bore of the sleeve 112.

A bell crank 122 pivoted at 124 has a rearwardly projecting bifurcated arm 126. Opposed pins 128 on this arm oppositely engage an annular groove in the sleeve 112. The motor 116 is rigidly secured to a bracket 130 which is fastened to the side of the hopper and the pivot 124 for the bell crank is positioned upon an arm 132 forming a rigid part of the bracket 130.

Due to its engagement with the pinions 110, the gate 106 is normally maintained in its uppermost position. Means is provided to release the gate from engagement with the pinions 110 at the forward end of the movement of the carriage and comprises a lug 134 projecting from the frame of the machine in such position as to contact the end of the bell crank 122, as shown in Fig. 15, when the charger is in its foremost position, and move it about its pivot in a clockwise direction. Accordingly, the bifurcated arm 126 and the opposed pins 128 are moved downwardly, as viewed in Figs. 15 and 16, sliding the sleeve 112 and the associated pinions in the same direction with respect to the motor shaft 118 to the final position shown in Fig. 15. The gate 106 is now capable of falling by its own weight when so permitted.

Further means is provided to actuate the motor to raise the gate when it falls by gravity, and consists of a motor switch 136 and a pair of pins 138 rigidly secured to the gate 106 adjacent one of the racks. As appears in the figures, the control means are positioned so that, when the gate drops, the upper pin 138 will impinge the switch and force it to closed position, starting the motor. Rotation of the motor shaft relative to the sleeve 112, due to the inertia and frictional resistance of the latter, forces the sleeve axially (in an upward direction, as viewed in Fig. 15) until the pinions 110 are in engagement with their respective racks 109. Further rotation of the shaft 114 raises the gate upwardly from the mold. When the gate has risen to the position shown in Fig. 14, the lower pin 106 contacts the underside of the switch 140, breaking the circuit and shutting off the motor.

The operation of the machine (referring to Figs. 19 to 25) is as follows: In the initial position, the charging member is located at the rearward end of its path of travel and is supplied

by manual means or any suitable means with brick-making material.

In the instant device, the material forming the main body of the brick is supplied in the forward chamber 74, while the material for the veneered surfaces is supplied in the rear chamber 76. The plungers of the press will be initially separated and the bottom plate 34 will be flush with the top of the mold, as indicated in Fig. 19. At this time the action of the cam 70 and follower 66 causes the charger to be moved forward uniformly and rapidly to its foremost position, namely, the position shown in Fig. 20, in which position the bell crank 122 is impinged against the projection 134 to move the sleeve 112 axially to the right, as viewed in Fig. 17, and release the pinions 110 from engagement with the racks 109. At this point rotation of the crank 10 raises the crank end of the connecting rod, permitting the frame 26 and the plunger 32 to drop downwardly, as in Fig. 20, to the position shown in Fig. 21. The gate 106 at this time being slidably positioned in the partition member 72 and free to move under the influence of its own weight, drops with the plunger 32 and the lower platen 34, as shown in Fig. 21. Meanwhile the brick-making materials from the respective compartments 74 and 76 of the charger likewise fall downwardly into the space formed in the mold by the dropping of the die-plate. The gate 106, as aforementioned, substantially divides the mold into two sections, the forward section being filled solely with material from the compartment 74, while the remainder of the mold consists of material from the compartment 76.

At this time the upper pin 138, impinging upon the switch 136, actuates the motor shaft 116 to start rotation in the shaft 114. The sleeve accordingly is moved rotationally and axially with respect to the shaft 114 until the pinions 110 engage their respective racks 109. From this point rotation of the shaft and sleeve as a unit causes elevation of the gate 106 to its upper position, as shown in Fig. 22, at which position the lower pin 138 switches off the motor, as hereinbefore described. Withdrawal of the gate 106 will permit a clear line of demarcation to remain between the materials forming the main body of the brick 98 and the portion 100, corresponding to the veneered end thereof. It will be obvious that the cam 70 must be so positioned as to permit the charger to stop momentarily in the position indicated in Figs. 20, 21 and 22 for the purpose of permitting the above action to take place.

Subsequently the carriage is moved relatively rapidly rearwardly to the position shown in Fig. 23. When substantially this position is reached the roller 45 contacts the bell crank 46, actuating the lug 48 and the cams 50 to permit the entire frame 26, including the bottom crosshead 30 and its associated parts, to drop a distance indicated in Fig. 24, the forward compartment 74 being positioned immediately over the mold. The space created by the dropping of the frame will be filled with the veneer material from this compartment, and as the charger continues its rearward movement the front edge thereof will level off the material flush with the top edge of the mold. This action having taken place, as shown clearly in Fig. 25, the upper plunger 36 is brought downwardly under the influence of the straightening of the toggles 22 and 24, to compress the material in the mold into a brick of the proper size.

After ejection from the mold the article may be dried, fired or otherwise treated in any conventional manner. The final article, as it appears in Fig. 3, will comprise a main body portion 98, formed of the material originally fed to the rearward compartment 76 of the charger. A relatively thin lamination or layer of material from the compartment 74 is integrally associated with the remainder of the brick. A second integral lamination forms one adjacent face portion 102 of the brick. It will be noted that due to the positive action and separation of the relative bodies of material during manufacture, the laminations of veneer are sharply separated from the body 98 of the brick-making material by well-defined, straight, plane surfaces.

The present invention provides a ready means for manufacturing brick having composite veneered portions that is particularly suitable in the manufacture of pressed brick wherein the exposed surface portions only are to be formed of a relatively costly material. It will be obvious that various equivalent means may be employed to cause proper apportioning and placement of the various layers of raw material into the mold. While certain forms of separators have been disclosed for this purpose, various other devices will be operative in accordance with the present invention.

It is not necessary with all raw materials to bring the separator into action completely across the length and depth of the mold. On the contrary, action through only a portion of the vertical distance shown in the figures will be sufficient in many cases to properly direct the materials substantially to the positions shown in the figures. Moreover, the present invention may be employed for pressing or forming various other articles aside from bricks, and can be adapted in accordance with the above disclosure to the formation of veneered or layered portions of widely varying proportions and relative positioning.

The term "brick" as used in the instant specification and claims, is not employed in a limited sense but is meant to cover ceramic units such as floor brick, paving brick and fire brick, as well as materials generally known as tiles and other elements formed of clays, aggregates and the like and bound together in a unitary mass.

It is thought that the invention and numerous of its attendant advantages will be understood from the foregoing description and it is obvious that numerous changes may be made in the form, construction and arrangement of the several parts without departing from the spirit or scope of the invention, or sacrificing any of its attendant advantages, the form herein described being a preferred embodiment for the purpose of illustrating the invention.

The invention is hereby claimed as follows:

1. In a brick making machine, a mold, a bottom platen for the mold, charging means arranged to charge a plurality of bodies of dissimilar brick making material into said mold, a partition member, means to lower the platen to locate said partition member in the mold, and means to withdraw the partition from the mold.

2. In a brick making machine, a mold, a movable platen for the mold, charging means arranged above the mold to charge a plurality of bodies of dissimilar brick making material into said mold, a partition member movably mounted on the charging means, means to lower the platen in the mold to locate said partition member in the mold, and means to actuate said

charging means to feed said dissimilar brick making materials on separate sides of said partition.

3. In a brick making machine, a mold, a movable platen for the mold, charging means arranged above the mold to charge a plurality of bodies of dissimilar brick making material into said mold, a partition member movably mounted on the charging means, means to lower the platen in the mold to locate said partition member in the mold, means to actuate said charging means to feed said dissimilar brick making materials on separate sides of said partition, means to remove the partition when the mold has been filled, and means to press the material in the mold to form a finished brick.

4. In a machine for forming pressed veneered brick, a brick making mold having a movable platen, charging means operable from remote position to mold charging position, said charging means comprising means to accommodate a plurality of bodies of dissimilar brick making material, means to supply the charging means with said dissimilar brick making material, means to move the charger to position over the mold to feed said bodies of brick making material to respective portions of the mold, said charging means having a partition member adapted to be supported by the platen, and means to lower the platen to interpose the partition member between the said respective portions of the mold during filling thereof.

5. In a machine for forming pressed veneered brick, a brick making mold having a movable platen, charging means operable from remote position to mold charging position, said charging means comprising means to accommodate a plurality of bodies of dissimilar brick making material, means to supply the charging means with said dissimilar material, means to move the charger to position over the mold to feed said bodies of brick making material to respective portions of the mold, said charging means having a partition member adapted to be supported by the platen, means to lower the platen to interpose the partition member between the said respective portions of the mold during filling thereof, and means to withdraw the partition member when the mold is filled.

6. In a machine for pressing veneered brick, a mold table, an open top mold in said table, charging means operable from a relatively remote position to a position above the mold whereby to charge the said mold, said charging means comprising a plurality of compartments being generally open at the bottom and movable on the mold table to mold charging position, means to supply the said compartments with contrasting bodies of dissimilar brick making material, a partition member pivoted to the charging means, said partition member being pivotal to downward position when the charging means is in mold charging position, means to feed said contrasting bodies of brick making material on opposite sides of said partition member, and means to withdraw the partition member.

7. In a machine for the manufacture of pressed veneered brick, a brick pressing mold having charging means operable from relatively remote position to mold feeding position, partition means mounted on said charging means for movement with respect thereto, a platen operable in the mold to form one side thereof, means to move the platen to open the mold, means to cause the partition member to follow the platen into the mold, means to feed contrasting types of brick material on opposite sides of the partition member, and means to withdraw the partition.

8. In a machine for the manufacture of pressed veneered brick, an upstanding mold, a movable platen forming the bottom portion of said mold, mold feeding means operable to position above the mold whereby to supply the mold with brick making material, partition means mounted on said feeding means and vertically and freely movable with respect thereto and into the mold, means to lower the platen to open the mold whereby to permit the partition member to move freely into the mold to separate the said mold into sections corresponding to the veneer and the body portion of the final brick, and means to introduce contrasting bodies of brick making material from said charging means in said respective sections.

9. In a machine for the manufacture of pressed veneered brick, an upstanding mold, a movable platen forming the bottom portion of said mold, mold feeding means operable to position above the mold whereby to supply the mold with brick making material, partition means mounted on said feeding means and vertically and freely movable with respect thereto and into the mold, means to lower the platen to open the mold whereby to permit the partition member to move freely into the mold to separate the said mold into sections corresponding to the veneer and the body portion of the final brick, means to introduce contrasting bodies of brick making material from said charging means in said respective sections, and means to withdraw the partition member when the charger is returned to remote position.

10. In a machine for the manufacture of pressed veneered brick, an upstanding mold, a movable platen forming the bottom portion of said mold, mold feeding means operable to position above the mold whereby to supply the mold with brick making material, partition means mounted on said feeding means and vertically and freely movable with respect thereto and into the mold, means to lower the platen to open the mold whereby to permit the partition member to move freely into the mold to separate the said mold into sections corresponding to the veneer and the body portion of the final brick, means to introduce contrasting bodies of brick making material from said charging means in said respective sections, means to withdraw the partition member when the charger is returned to remote position, means to drop the platen to increase the depth of the mold a distance to accommodate the side veneer, and means to feed said additional space with brick making material from only one of said bodies in the charging means.

11. In a machine for the manufacture of pressed veneered brick, a brick pressing mold having charging means operable from relatively remote position to mold feeding position, partition means mounted on said charging means for movement with respect thereto, a platen operable in the mold to form one side thereof, means to move the platen to open the mold, means to cause the partition member to follow the platen into the mold, means to feed contrasting types of brick material on opposite sides of the partition member, means to withdraw the partition, means subsequently to adjust the charging means to feed to the mold only one of said contrasting types of brick making material,

and means to move the platen an additional distance to accommodate the side veneer.

12. In a machine for the manufacture of pressed veneered brick, a brick pressing mold having charging means operable from relatively remote position to mold feeding position, partition means mounted on said charging means for movement with respect thereto, a platen operable in the mold to form one side thereof, means to move the platen to open the mold, means to cause the partition member to follow the platen into the mold, means to feed contrasting types of brick material on opposite sides of the partition member, means to withdraw the partition, means subsequently to adjust the charging means to feed to the mold only one of said contrasting types of brick making material, means to move the charging means to withdraw the partition member and locate the charging means at a position where one only of said contrasting bodies of brick making material will be fed to the mold, and means to increase the depth of the mold while the charger is in said last named position whereby to provide a veneer layer.

13. In a machine for pressing veneered brick, a mold table, a mold arranged in said table and having a movable platen, a charging frame having a plurality of compartments and a partition and being movable from remote position where the charging frame may be supplied with brick making material to mold feeding position, means to locate the charging frame at said second named position with the respective compartments above predetermined portions of the mold and the partition supported by the platen, and means to lower the platen whereby to feed said portions of the mold with material from the corresponding chamber while permitting the partition to drop.

14. A brick making machine comprising a mold having a bottom platen, charging means adapted to charge a plurality of bodies of dissimilar brick making materials into said mold and having a partition member adapted to be supported by the platen, means to lower the platen to locate the partition member in the mold, means to withdraw the partition, and means to press the contents of the mold to provide a unitary brick.

GORDON W. REED.