Dec. 11, 1951 R. A. SANDBERG 2,578,021

METHOD OF MAKING A LOCKING RING AND PLATE ASSEMBLY

Original Filed March 26, 1946 2 SHEETS—SHEET 1

Fig. 1

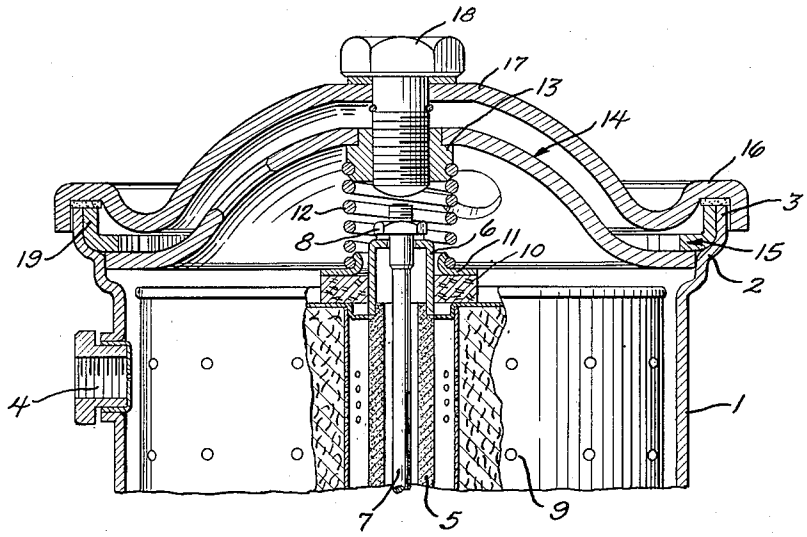

Fig. 4

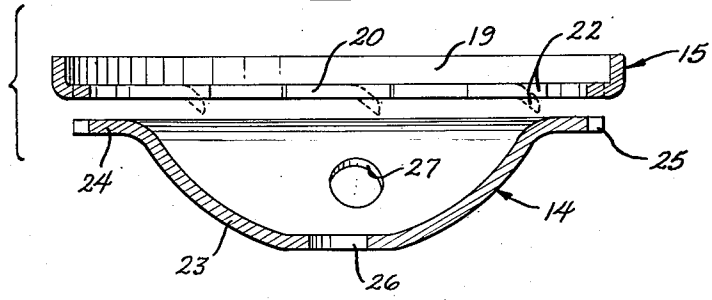

Inventor

Ray A. Sandberg

By The Firm of Cushman, Darby & Cushman Atty

Dec. 11, 1951 R. A. SANDBERG 2,578,021

METHOD OF MAKING A LOCKING RING AND PLATE ASSEMBLY

Original Filed March 26, 1946 2 SHEETS—SHEET 2

Fig. 2

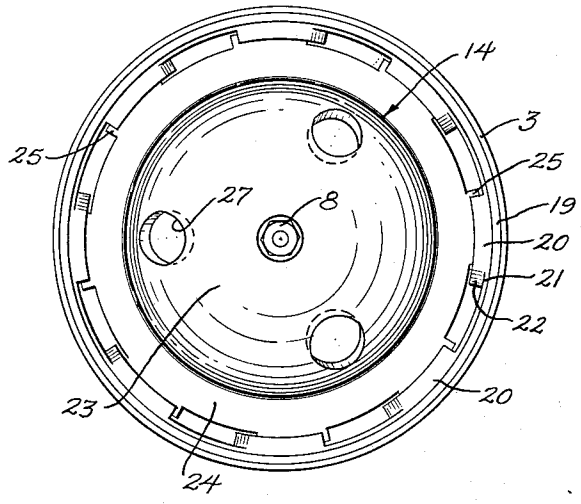

Fig. 3

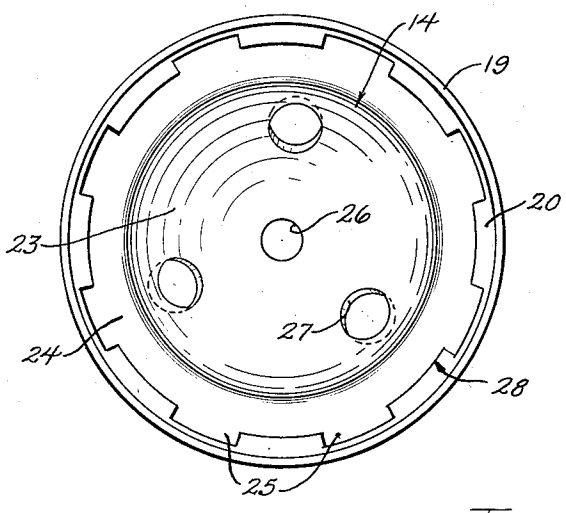

Inventor

Ray A. Sandberg

By The Firm of Charles W. Hills Attys.

Patented Dec. 11, 1951

2,578,021

UNITED STATES PATENT OFFICE

2,578,021

METHOD OF MAKING A LOCKING RING AND PLATE ASSEMBLY

Ray A. Sandberg, Waukegan, Ill., assignor to Houdaille-Hershey Corporation, Detroit, Mich., a corporation of Michigan

Original application March 26, 1946, Serial No. 657,121. Divided and this application December 5, 1947, Serial No. 789,886

2 Claims. (Cl. 113—121)

1

This invention relates to improvements in a locking ring and plate assembly and to a new and novel method of making the same, the assembly being of the character highly desirable for use in a container for oil filtering cartridges or the like, although the invention will have other uses and purposes as will be apparent to one skilled in the art.

This application is a division of my co-pending application entitled "Filter Cartridge Container and Method of Making the Same," filed March 26, 1946, Serial No. 657,121.

In the past, many and various types of interlocking assemblies have been made to hold parts together against the action of spring, resilient, or other means tending to separate those parts, and frequently the pressure of the means tending to separate the interlocking parts was applied to the weakest portion of the structure. Also, where the two parts of the interlocking assembly were made of separate pieces, that is, initially different pieces, some difficulty was frequently experienced in endeavoring to make the pieces fit properly after having been mass produced. Likewise, considerable sacrifice in economy and manufacture has resulted from previous methods of making such interlocking assemblies in the past.

With the foregoing in mind, it is an important object of the instant invention to provide a locking ring and plate assembly of such character that both the ring and plate are formed from an initially single piece blank of material.

It is also a feature of this invention to provide a locking ring and plate assembly of such character that the only metal waste during the production of both parts resides in the provision of openings or apertures in the plate, if such are desired.

Still another object of this invention is the provision of a new and novel method of making a locking ring and plate assembly.

A further feature of the invention resides in the provision of a new and novel method of making a locking ring assembly that results in the provision of an interlocking ring and plate that may be produced with great rapidity and mass production with the proper fit between them always assured.

Still another object of this invention is the provision of a new and novel method of manufacturing a locking ring and plate assembly that is capable of withstanding heavy pressure, and which is so constructed that any load imposed upon the relative parts is transferred to the location of the interlock between the parts and with the instant assembly, the interlocking portions are of considerable area.

2

It is also a feature of the invention to provide a locking ring and plate assembly wherein the parts may be interlocked with each other or disengaged with great rapidity, stop means being provided to insure the proper interlock between the parts even upon careless handling.

While some of the more salient features, characteristics and advantages of the instant invention have been above pointed out, others will become apparent from the following disclosures, taken in conjunction with the accompanying drawings, in which:

Figure 1 is a fragmentary vertical sectional view, with parts in elevation, of an oil filter casing equipped with a locking ring and plate assembly embodying improvements of the instant invention;

Figure 2 is a plan view of the structure of Figure 1 with the cover removed to illustrate more clearly the assembly of this invention;

Figure 3 is a plan view of the locking ring and plate assembly alone, illustrating early steps in the formation of these parts under the method involved in this invention; and

Figure 4 is a central vertical sectional view through the assembly itself illustrating later steps in the process of forming the assembly.

As shown on the drawings:

In Figure 1 the illustrated embodiment of this invention is shown in association with a container for an oil filter cartridge, one example of a use of the instant invention. In that showing, the container comprises a casing 1 generally of cylindrical shape, and it is to be assumed that the casing has a closed bottom with the exception of an outlet opening. The upper portion in the casing is stepped outwardly as indicated at 2 to provide a cylindrical mouth margin 3 of greater diameter than the body of the casing. At one point near its upper end, the casing may be provided with an inlet fitting 4 through which oil or other fluid to be filtered may enter the casing.

Inside the casing 1 is a center outlet tube 5 of which at least the upper portion, as illustrated, is preferably constructed of a fine filtering material such as powdered metal, or which may be an extremely fine mesh screen. Seated on the upper end of this center tube is a hollow cap 6, and a rod 7 secured to a lower portion of this structure extends through both the filter portion 5 of the center tube and the cap. On the outer extremity of this rod is a nut 8 which, when tightened, holds both the filter portion 5 of the center tube and the cap 6 in position.

Around the center tube 5 is a filter cartridge 9 of any satisfactory known construction, such

cartridges being centrally apertured for such positioning in a container. When dropped into a container, such a filter cartridge seats upon a suitable gasket to close the lower end thereof around the central aperture, in substantially the same manner that the upper end is likewise closed by means of a gasket 10 which may be held tightly in position by a collar 11 carried on the lower end of a coiled spring 12, the upper end of which is engaged with an internally threaded nut 13 that may, if so desired, be permanently secured to a dome-shaped locking plate 14. In the illustrated instance such securement may be established by virtue of a stem of reduced diameter on the nut projecting through an aperture in the locking plate, and the parts being brazed or equivalently secured together.

The locking plate 14 is removably engageable in an interlocking manner with a locking ring 15, and when so engaged, the spring 12 exerts a downward pressure upon the collar 11 and gasket 10 to hold the filter cartridge 9 in the casing against rattling, and to prevent any escape of fluid to be filtered through the end of the central opening or inside tube of the cartridge.

The locking ring 15 may be brazed or equivalently secured to the upper marginal portion 3 of the casing 1, if so desired. In this position it reinforces the mouth end of the casing and terminates flush therewith to provide a better seat for an annular formation 16 on a dome-shaped cover 17. This cover is centrally apertured to accommodate a bolt 18, the threaded shank of which is engageable in the aforesaid nut 13 to tightly clamp the cover in position. While this is done, regardless of the force used in the clamping operation, all reactive stresses are transferred to the marginal interlocking between the plate 14 and ring 15, a location that can adequately and readily bear the load. With reference more particularly to Figures 1 and 2, it will be seen that the locking ring, generally indicated by numeral 15, is angular in cross section and includes an upright cylindrical portion 19, and the lower margin of this portion is turned inwardly at substantially right angles and cut to define a series of spaced teeth or projections 20. As seen clearly in Figure 2, the line of cut defining the space between adjacent teeth 20 is extended at one end along the base of the respective tooth as indicated at 21, and the free end portion 22 of the tooth is then preferably turned downwardly as seen clearly in Figure 4. When this portion of a tooth is turned downwardly, the top edge thereof is at the same time beveled or rounded to remove the relatively sharp corner.

The locking plate, generally indicated by numeral 14, if put to the use shown in Figure 1, preferably is provided with a centrally domed portion 23 which merges into an outer substantially horizontal annular portion 24 also cut to define spaced teeth or projections 25 therearound each of which is of a size to pass easily through the space between adjacent teeth 20 on the ring 15. Also, when used as illustrated in Figure 1, the plate 14 should be provided with a central aperture 26 to receive the aforesaid clamping bolt 18. To facilitate manipulation of the plate to and from interlocking engagement with the ring, the plate may also be provided with one or more apertures 27 or equivalent formations, if so desired.

When it is desired to interlock the plate 14 with the ring 15, it is a simple expedient to position the plate relatively to the ring so that

the teeth 25 on the plate pass through the spaces between the teeth 20 on the ring, and when the teeth 25 have dropped below the level of the ring teeth, a simple turning of the plate will bring the teeth 25 beneath the teeth 20 to effect the adequate interlock. The downwardly turned ends 22 on the ring teeth 20 provide an automatic stop to the turning movement of the plate when the interlock is established. Of course, with the plate and ring used in the manner shown in Figure 1, pressing down of the plate is against the action of the coiled spring 12, but some resistance against the plate at that time actually aids the interlocking operation rather than making it more difficult.

My novel method of making the plate 14 and locking ring 15 will now be described with reference more particularly to Figures 3 and 4. In connection with these figures, it should be understood that the plate 14 is in inverted position relatively to the position of that plate in Figures 1 and 2. At the start of the method, a single blank of stock is drawn to substantially the shape seen in Figure 3. After the drawing operation, the locking plate is severed from the locking ring in a manner to define the teeth 20 from the ring and the teeth 25 on the plate, such severance occurring along a staggered line of cut indicated by numeral 28 in Figure 3. Simultaneously with this cutting operation, or immediately thereafter, the holes 26 and 27 may be punched in the dome portion of the locking plate, if the holes are desired. After the cutting operation, with the parts now appearing substantially as seen in Figure 4, a restrike is made upon the locking plate 14 to slightly reduce its diameter so that the teeth 25 will pass freely through the spaces between the teeth 20 on the ring. This operation completes the formation of the locking plate.

In connection with the ring, after the plate has been removed therefrom by the cutting operation, like end portions 22 of each tooth or projection 20 are struck downwardly as indicated by the dotted lines in Figure 4 and the upper corner portions beveled or sheared off to provide a relatively smooth upper face to the ring. Upon the completion of this operation, the locking ring is finished.

It is to be especially noted that in this method of making the locking ring and plate, there is no waste metal, or substantially no waste metal, since the amount of metal lost by the provision of the apertures 26 and 27 is clearly negligible. Thus, the manufacture of the locking plate and locking ring is extremely simple, and highly economical, resulting in the provision of equally strong parts that are obviously accurately fitted relatively to each other. Of course, it will be understood that if the locking plate is not desired with a central dome portion, that portion of the plate may be given some other configuration, and the apertures 26 and 27 may be provided if desired, and omitted if desired.

It will, of course, be understood that various details of construction may be varied through a wide range without departing from the principles of this invention and it is, therefore, not the purpose to limit the patent granted hereon otherwise than necessitated by the scope of the appended claims.

I claim as my invention:

1. The method of making a locking plate and locking ring assembly, including the steps of severing a single disc-like blank of material to provide both the plate and ring by cutting the disc

along a line of cut to define an inner circumferential row of spaced teeth on said ring and an outer circumferential row of spaced teeth of less width on the plate and extending the line of cut along the base of each ring tooth at one end thereof a predetermined distance, restriking the plate to reduce its diameter sufficiently to pass through the ring, and bending down said one end of each tooth on the ring to function as a stop to insure interlocking of the plate and ring teeth when the plate is inserted through the ring and rotated relatively thereto.

2. The method of making an interlocking assembly, including the steps of drawing a single blank to a desired shape, striking out the intermediate portion of said blank along a tortuous line of cut to form spaced outward projections on said portion and spaced inward projections on the border part around said portion and extending the line of cut along the base of each border projection at one end thereof a predetermined distance, restriking said portion to reduce its area

sufficiently for the projections thereon to pass readily through the spaces between projections on said border part, and bending down said end portions of the projections on said border part to act as stop members to insure releasable interlocking of the intermediate portion and border part when said portion is passed through and rotated relatively to the border part.

RAY A. SANDBERG.

REFERENCES CITED

The following references are of record in the file of this patent:

UNITED STATES PATENTS

Number	Name	Date
1,039,722	Fullman	Oct. 1, 1912
1,743,544	Helberg	Jan. 14, 1930
1,777,369	Jacobs	Oct. 7, 1930
2,304,544	Korwan	Dec. 15, 1942
2,333,890	Russell	Nov. 9, 1943
2,349,913	Patterson	May 30, 1944