PCT

WORLD INTELLECTUAL PROPERTY ORGANIZATION
International Bureau

INTERNATIONAL APPLICATION PUBLISHED UNDER THE PATENT COOPERATION TREATY (PCT)

(51) International Patent Classification 6 : B65D 77/20

A1

(11) International Publication Number: WO 95/14624

(43) International Publication Date: 1 June 1995 (01.06.95)

(21) International Application Number: PCT/US94/12938

(22) International Filing Date: 15 November 1994 (15.11.94)

(30) Priority Data:
08/156,595 23 November 1993 (23.11.93) US

(71) Applicant: E.I. DU PONT DE NEMOURS AND COMPANY [US/US]; 1007 Market Street, Wilmington, DE 19898 (US).

(72) Inventor: FLIEGER, Hans, Dieter; 46, chemin de Romettaz, CH-1234 Vessy (CH).

(74) Agents: KAEDING, Konrad, S. et al.; E.I. Du Pont de Nemours and Company, Legal/Patent Records Center, 1007 Market Street, Wilmington, DE 19898 (US).

(81) Designated States: AU, CA, JP, European patent (AT, BE, CH, DE, DK, ES, FR, GB, GR, IE, IT, LU, MC, NL, PT, SE).

Published
With international search report.

(54) Title: RECLOSABLE PACKAGING SEAL AND METHODS RELATING THERETO

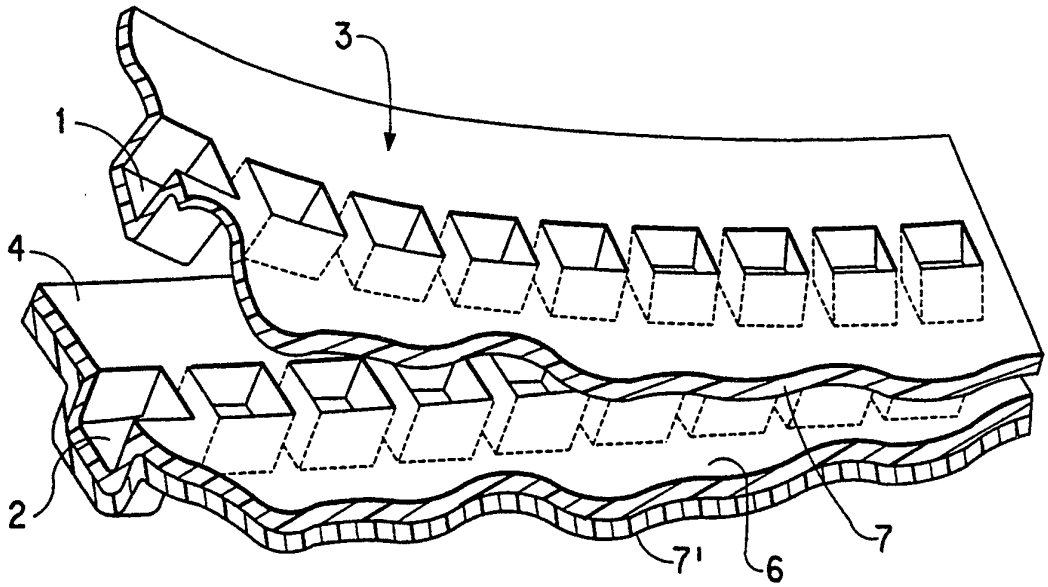

(57) Abstract

The present invention is directed to a releasable bond between two or more overlapping multi-layer film surfaces comprising a plurality of closely spaced, interconnecting indentations. More specifically, the releasable seal of the present invention is directed to the simultaneous embossing of precisely configured identations, involving multi-layer films which can heat seal together during the embossing operation; the resulting seal layer is designed and configured to delaminate and tear when the package is initially opened, while the indentations are designed and configured to re-engage and partially re-seal when the package is later closed.

FOR THE PURPOSES OF INFORMATION ONLY

Codes used to identify States party to the PCT on the front pages of pamphlets publishing international applications under the PCT.

AT	Austria	**GB**	United Kingdom	**MR**	Mauritania
AU	Australia	**GE**	Georgia	**MW**	Malawi
BB	Barbados	**GN**	Guinea	**NE**	Niger
BE	Belgium	**GR**	Greece	**NL**	Netherlands
BF	Burkina Faso	**HU**	Hungary	**NO**	Norway
BG	Bulgaria	**IE**	Ireland	**NZ**	New Zealand
BJ	Benin	**IT**	Italy	**PL**	Poland
BR	Brazil	**JP**	Japan	**PT**	Portugal
BY	Belarus	**KE**	Kenya	**RO**	Romania
CA	Canada	**KG**	Kyrgystan	**RU**	Russian Federation
CF	Central African Republic	**KP**	Democratic People's Republic of Korea	**SD**	Sudan
CG	Congo			**SE**	Sweden
CH	Switzerland	**KR**	Republic of Korea	**SI**	Slovenia
CI	Côte d'Ivoire	**KZ**	Kazakhstan	**SK**	Slovakia
CM	Cameroon	**LI**	Liechtenstein	**SN**	Senegal
CN	China	**LK**	Sri Lanka	**TD**	Chad
CS	Czechoslovakia	**LU**	Luxembourg	**TG**	Togo
CZ	Czech Republic	**LV**	Latvia	**TJ**	Tajikistan
DE	Germany	**MC**	Monaco	**TT**	Trinidad and Tobago
DK	Denmark	**MD**	Republic of Moldova	**UA**	Ukraine
ES	Spain	**MG**	Madagascar	**US**	United States of America
FI	Finland	**ML**	Mali	**UZ**	Uzbekistan
FR	France	**MN**	Mongolia	**VN**	Viet Nam
GA	Gabon				

TITLE

RECLOSABLE PACKAGING SEAL
AND METHODS RELATING THERETO

This is a continuation-in-part of application Serial No. 08/034,331, which is a continuation-in-part of Serial No. 07/616,388 filed November 21, 1990.

FIELD OF THE INVENTION

The present invention is directed to a resealable bond between two or more overlapping multi-layer film surfaces comprising a plurality of closely spaced, interconnecting indentations. More specifically, the releasable seal of the present invention is directed to the simultaneous embossing of precisely configured indentations, involving multi-layer films which can heat seal together during the embossing operation; the resulting seal layer is designed and configured to delaminate and tear when the package is initially opened, while the indentations are designed and configured to re-engage and partially re-seal when the package is later closed.

BACKGROUND OF THE INVENTION

Broadly speaking, resealable plastic packages are known. Such packages include those which use resealable glue. Others use an elongated groove which will releasably engage a complementary channel.

Another general class of releasable seals in plastic packaging involves interconnecting positively and negatively formed members (otherwise referred to as "male" and "female" members). Generally speaking, each member generally is made from the same material and therefore would fuse together initially, if formed while in contact with one another. Such reclosable packages are generally molded as one piece, and the releasable seal is then generally created by folding the molded article, bringing the male and female members together to form the releasable seal. Such a molding operation can be complex and alignment between the male and female members can be difficult. Such releasable seals also generally require the use of complex and expensive machinery.

SUMMARY OF THE INVENTION

The present invention is directed to a releasable seal (or engagement) between two or more multi-layer sheets and is created by a simple thermoforming process, involving precisely configured indentations. The sheets generally must be aligned, one on top of the other, and can be the same or different.

Each sheet preferably comprises a heat seal layer, and the sheets are overlapped in a manner which substantially provides contact between the heat seal layer of each sheet. The overlapping sheets are then heated above their softening temperature and embossed (thermoformed). During the embossing operation, the heat seal layers preferably fuse and seal together.

The embossing process is conducted by thermoforming a plurality of

complementary protrusions along the aligned sheets and thereafter allowing the sheets to cool. The protrusions are preferably made by means of a female die, whereby a small portion of the softened sheets is forced into the die cavity by means of positive pressure from above and/or negative pressure from the bottom of the die cavity; optionally, a complementary male die can be used to force the softened films into the female die cavity.

The resulting thermoformed protrusion is preferably about 5 millimeters in length (and depth) and spaced about 5 millimeters from one another. The resulting closely spaced protrusions, in combination, form an effective releasable seal between the plastic films.

The protrusions can be perpendicular (90°) to the plane of the films, or more preferably, can be angled (less than 90° to the plane of the films). By angling the protrusion, the two films are more difficult to pull apart, since opposing forces on the films (perpendicular to the plane of the films) would cause the inserted (inner film) portion of the angled protrusion to deform as it separated from the receiving (outer film) portion of the angled protrusion.

Other configurations are possible. For example, the protrusions could be angled in different directions, so that sliding one film relative to the other film would not eliminate the need to deform at least some of the film protrusions as the inner film is separated from the outer film.

The protrusions can be cylindrical, square, rectangular, "star" shaped or the like. Generally speaking, the greater the surface area of the protrusions, the greater the sealing ability of the seal, and therefore complex configurations having greater surface areas are more preferred. The female die can be wider at the bottom so that the protrusion is wider at its tip than at the base, thereby further providing a lock-in-place engagement between the two sheets.

The heat seal layers of the present invention can be of any conventional or non-conventional heat sealable material, including ionomer (i.e., ethylene/acrylic acid copolymer or ethylene/methyacrylic acid copolymer, wholly or partially neutralized with a cation, such as sodium or zinc); vinyl ester (i.e., ethylene vinyl acetate); acid copolymer (i.e., ethylene/acrylic acid copolymer or ethylene/methacrylic acid copolymer), ultra low density polyethylene, metalocene or single site catalysis polyethylene, or the like. Heat sealable resins are well known and broadly available commercially.

Critical to the present invention is that the heat seal layer be configured to tear and delaminate upon the opening of the package. To encourage the desired tearing, a notch is preferably provided to at least the heat seal layer. As the two sheets are pulled apart, the heat seal layer will tend to tear along the notch, and once the tearing begins, the heat seal layer will continue to tear even beyond the notch. As the heat seal layer tears, it should also delaminate from at least one of the films. Preferably, the fused heat

seal layers will remain with one of two sheets and delaminate away from the other sheet.

Such delamination can be accomplished by designing one of the sheets with a stronger bond to the heat seal layer than the other sheet. In this respect, it is generally preferred that the two sheets are different, wherein one sheet has a stronger bond to the heat seal layer than the other.

Since heat seal layers often have carboxylic, anhydride, or ester functionality, such heat seal layers generally have less adhesion to nonporous, crystalline, non-polar substrates, relative to more polar, porous or amorphous substrates. Preferred substrates which have relatively low adhesion to many heat seal layers include polyethylene (linear or non-linear of any density), polypropylene, and hydrocarbon copolymers thereof. The most preferred substrates have very low glass transition temperatures or are otherwise very "soft" at room temperature; such "soft" substrates or substrate coatings will generally allow for easy delamination.

The non-delaminating film preferably comprises a heat seal layer which is supported by a substrate or coating which has relatively higher bonding or adhesion to the heat seal layer. Such support substrate or coating materials are preferably substantially polar, where such polarity would enhance the bonding between the heat seal layer and the support coating or substrate. Preferred such materials include nylon, polyester and the like.

Furthermore, relatively tough coatings or substrates may also be appropriate, where they have good adhesion to the heat seal layer, regardless of polarity. Tough olefinic homopolymers and copolymers, regardless of polarity may be appropriate in such an application, provided there is relatively stronger bonding relative to the delaminating film.

An important attribute of the present invention is the ability to create the reclosable seal while the object to be ultimately packaged lies between the two sheets. Many conventional reclosable packaging systems require that the package be first manufactured and later filled. Here, a portion of the periphery of the two overlying sheets can be welded or adhered together, and a food item or the like can be inserted between the sheets; thereafter, the reclosable seal of the present invention can be applied to the reaming periphery of the sheets, thereby forming a finished, packaged product.

The reclosable seal of the present invention can be used along more than one edge of the package and hence, the reclosable seal can be opened extensively to expose the packaged object. With many conventional systems, the opening is only along one peripheral edge, and hence, the consumer must generally place a hand into the package, between the two films. In the present invention, the reclosable seal can be placed along three peripheral edges and the films can be separated to such an extent that the packaged object is freely accessible to the consumer.

Another attribute of the present invention is its simplicity and ease in

manufacture. The simple embossing process is far less expensive and complex relative to conventional systems.

DESCRIPTION OF THE DRAWINGS

Fig. 1a is a perspective view of a precursor pair of multi-layer films, relating to a preferred embodiment of this invention.

Fig. 1b is a perspective view of the preferred embodiment derived from the films of Fig. 1.

Fig. 1c is a perspective view of the preferred embodiment of Fig. 1b, subsequent to partial opening.

Fig. 2a is a cross-sectional side view of a thermoformed indentation according to the present invention.

Fig. 2b is a perspective view of the embodiment of Fig. 2a subsequent to the delamination and removal of the top sheet.

DETAILED DESCRIPTION OF THE PREFERRED EMBODIMENTS AND BEST MODE

The reclosable seals of the present invention can be created by using overlapping films or sheets, 3 and 4 respectively, as illustrated in Figure 1. The sheets generally must be aligned, one on top of the other, and preferably are multi-layer films comprising support layers 7 and 7' and further comprise a heat seal layer 5 and 5'.

The heat seal layers are preferably aligned in contacting relationship to one another and fused together during the thermoforming process, resulting in a structure as indicated generally in Figure 1b. A row of thermoformed indentations is illustrated generally at 1, and an optional second row 9' is also shown in Figure 1b. The thermoforming is conducted at the softened temperature of the multi-layer films, and during the thermoforming process, the heat seal layers preferably are fused together as shown generally at 6 in Figures 1b and 1c.

As shown in Figure 1c, sheet 3 defines a row of male connecting members 1 and sheet 4 defines a row of female connecting members 2. The distance that separates the male (and female) connecting members is preferably 2 to 10 millimeters, more preferably 3-7 millimeters and most preferably about 5 millimeters. As can be seen from this example, the male and female members, 1 and 2 respectively, are formed by simultaneously shaping or embossing the sheets 3 and 4. The support layer of each sheet comprise a thermoformable polymer and embossing is achieved by hot-forming using methods to be disclosed hereafter in more detail.

The sheets 3 and 4 can be between about 3 and 1000 microns in thickness, more preferably between about 10 and 50 microns. The connecting members 1 and 2 have complementary cross-sectional dimensions which mate together and fit into each other due to the single step thermoforming process which simultaneously forms both the male and the female member. When the surfaces are separated, the sheets 3 and 4 are

withdrawn from each other with sequential disengagement of male and female connectors.

It is theorized that during disengagement, the male and female connecting members tend to strain and deform in the plane of the sheets which puts them out of alignment and results into a wedging effect between the respective side surfaces of said connecting members which resists the disengagement; This effect reinforces the retaining back pressure effect which results from the disconnecting pull. The contemplated combined effects perhaps explain why the binding strength of the assembling device is so effective. This assembly of the two sheets along the row of connecting members is also sufficiently tight to provide, under ambient pressure, a barrier appropriate to protect the content of a bag for instance from the influence of the outside.

In this disclosure, the term of "sheet" should be understood as including any flexible materials of any given thickness. The resistance of the assembly to separation of the sheets and also the sealing capacity through the line of connecting means can be increased by placing multiple rows of connecting means in parallel with multiple rows, each row is preferably staggered relative to that of another row. The embossed surfaces' surface area is increased, and hence the force for separating sheets from each other is also increased. The connecting members can also be given a rectangular form.

Since the mating of the male and female connecting members requires some force, the thickness of the sheet used for forming the male embossments must be sufficient to resist the effort. If the material of the sheet is too thin, its resistance can be enhanced by folding the sheet on itself in the area where the connecting members are formed.

As indicated previously, the male and female connecting members are formed by embossing at least two aligned sheets of thermoformable polymer. The simplest method to achieve embossing includes heating the area to be raised to forming temperature, placing this area in registration with a stamping matrix having in negative the shape of the desired relief, subjecting the sheet to depression on the matrix side of the sheet, this depression being sufficient to drive the softened sheets material into the hollow print in the matrix, cooling the area of the formed sheet and removing it from the matrix. This method is simple and fast. In some cases, the suction which drives the softened thermoformable material into the matrix prints can be replaced or supplemented by using a punch or positive fluid (i.e., gas) pressure which deforms the material and drives it into the matrix.

The female connecting means is made simultaneously. It is also possible to combine different forming methods to make the present connecting members, for instance combining vacuum forming and die stamping. The negative (or female) die can widened relative to the initial opening. In this way disengagement between the sheets becomes more difficult.

The heat seal layer 5 or 5' can be the same or different; critical to the heat

seal layers is that they be able to fuse together as they are placed in contact with one another and thermoformed. Heat seal materials in general are well known, any of which could be used in accordance with the present invention. Such conventional heat seal materials include ethylene vinyl acetate, acid copolymers, ionomers, ultra low density polyethylene, metalocene polyethylene and the like. Preferred heat seal compositions include random copolymers derived from a major portion of ethylene and a minor portion of one or more relatively polar monomers such as:

1. ethylenically unsaturated carboxylic acid monomers (e.g., acrylic acid, methacrylic acid, crotonic acid, etc.) or the neutralized metallic salts thereof (e.g., as found in the partially neutralized ethylene/carboxylic acid copolymers which are commonly referred to in the art as ionomers);
2. vinyl esters of alkanoic acids (e.g., vinyl acetate, vinyl propionate, vinyl butyrate, etc.);
3. lower alkyl or hydroxyalkyl (e.g., C1 to about C8) esters of the aforementioned ethylenically unsaturated carboxylic acids (e.g., methyl acrylate, ethyl acrylate, hydroxyethyl acrylate, n-butyl acrylate, methyl methacrylate, ethyl methacrylate, etc.);
4. polyvinylidine chloride; and
5. derivatives of the above.

Less preferred heat seal resins include graft modified olefin polymers, such as, high density polyethylene/acrylic acid graft copolymers, and ethylene/vinyl acetate copolymers graft modified with ethylenically unsaturated carboxylic acid monomers such as acrylic acid, maleic anhydride, etc.

The most preferred heat seal resins are derived from the addition polymerization of from about 50 to about 85 weight percent ethylene with from about 15 to about 25 weight percent of an ethylenically unsaturated carboxylic acid monomer (especially acrylic or methacrylic acid) or a vinyl ester of an alkanoic acid (especially vinyl acetate or vinyl propionate).

The most preferred heat seal materials are derived from at least:

1. about 10 to about 98 weight parts ethylene (more preferably about 70-98 weight parts ethylene); and
2. about 2 to about 90 weight parts acrylic, methacrylic acid, maleic acid, fumaric acid, itaconic acid, or half esters of maleic, fumaric or itaconic acid (more preferably about 2 to about 30 weight parts of the unsaturated acid)

wherein the resulting copolymer is wholly or partially neutralized with metal ions selected from groups Ia, Ib, IIa, IIb, IIIa, IVa, VIb and VIII of the Periodic Table of Elements; preferred such metal ions re sodium, potassium, zinc, calcium, magnesium, lithium, aluminum, nickel, and chromium; the most preferred metal ions are sodium or

zinc.

The ionomers of the present invention can be prepared by polymerizing ethylene and unsaturated carboxylic acid in the presence of free radical polymerization initiator at elevated temperatures of from about 100° to about 200°C, preferably from about 140° to about 160°C or from about 130° to about 145°C at high pressures, e.g., at least about 140 MPa (20,000 psi) preferably from about 140 MPa (20,000 psi) to about 350 MPa (50,000 psi) followed by neutralization of the carboxylic acid groups of the resultant direct copolymer with metal ions. A suitable polymerization process is discussed in detail in U.S. Pat. No. 3,264,272, the disclosure of which patent is hereby incorporated by reference.

Figure 1c illustrates the releasable nature of the thermoformed structure, wherein the top sheet can be pried away from the bottom sheet, such as, by allowing one sheet to overlap and extend beyond the other, thereby providing an easy gripping surface for pulling one sheet away from the other. As sheet 3 is pulled from sheet 4, the fused heat seal layers which are shown at 6 remain with only one of the sheets (sheet 4) and delaminates from the other sheet (sheet 3).

Figure 2a is a cross sectional view of a thermoformed portion of the two sheets as shown generally at 104. A notch 102 is cut through the top sheet 100 and the fused heat seal layers 94. As the top sheet 100 is pried from the bottom sheet 96, the top sheet will separate from the bottom sheet along the notch 102, and once the separation begins, it will generally continue until the top sheet (together with the combined heat seal layers) are removed from the bottom sheet support layer, as shown generally in Figure 2b.

To aid in delamination, the support layer 100 of the fully notched sheet preferably has greater adhesion to the heat seal layer 94 relative to the other sheet 96.

As shown in Figure 2a, a first sheet 90 defines a multi-layer laminate or coextrusion comprising an inner seal layer 94 which after thermoforming seals to the heat seal layer of the second sheet, thereby forming a combined heat seal layer 94. A preferred outer support layer preferably comprises polyamide, polypropylene or other material having a controlled low adhesion to the adjoining heat sealed layer 94.

The seal layers 94 preferably comprise ethylene acrylic (or methacrylic) acid copolymer partially neutralized with a cation, such as sodium or zinc; a preferred such seal material is available from E. I. du Pont de Nemours and Company under the brand name Surlyn® 1601. The seal layers are preferably about 2 to about 20 micrometers in thickness.

When the top and bottom sheets are overlapped and heated to the appropriate softening point, the contacting seal layers will fuse together. After thermoforming, the top and bottom sheets can be pulled apart. However, the seal layers will remain fused together, and delamination will occur between the fused seal layers 94

and the support layer 96 as shown generally at 110 by Figure 2b. Critical to this embodiment of the invention therefore is that there be relatively lower adhesion between the seal layer 94 and support layer 96. Diminished adhesion can be accomplished by using a softer support material or by coating the support with a conventional release agent.

A notch 102 can be used to further separate the fused seal layers from the support layer. The two sheets can then be re-closed according to the thermoformed indentations 104 as described above.

In the present invention, the heating seal step can advantageously be combined with the thermoforming of embossed connecting elements. For removing the two assembled surface elements, the adhesive force between them must be overcome. Afterwards, the two surface elements can be reclosed due to the male and female connection elements, which will match together.

As mentioned already in the foregoing disclosure, the present assembling device is usable to close pouches, bags and to ensure the fastening of flexible lids over container of more or less rigid texture; hence it is useful as fastening means in all appliances where a releasable bond is necessary.

CLAIMS

1. A package having a releasable seal, the package comprising:

a multi-layer structure comprising a first support layer heat sealed by means of a heat seal layer to a second support layer, said multi-layer structure further comprising multiple indentations and a notch, whereby separation of the first support layer from the second support layer causes the heat seal layer to delaminate from one of the support layers, wherein such delamination begins substantially at the notch, and the first support layer and the second support layer can be re-sealed together by engagement between the indentations.

2. A method of forming a resealable package comprising the steps of:

overlapping a first multi-layer sheet comprising a heat seal layer with a second multi-layer sheet comprising a heat seal layer, wherein the heat seal layers are placed in substantial contact with one another,

heating the overlapping sheets above their softening temperature and thermoforming indentations in the sheets, thereby causing the heat seal layers to fuse together, and

cutting a notch into a portion of the fused multi-layer sheets.

3. A method according to Claim 2 wherein the indentations are made by means of a female die, whereby a small portion of the softened sheets is forced into the die cavity by means of positive pressure from above or negative pressure from the bottom of the die cavity.

4. A composition according to Claim 1 wherein the heat seal layer comprises: a) ethylene/acrylic acid copolymer or ethylene/methacrylic acid copolymer, wholly or partially neutralized with a cation, such as sodium or zinc); b) vinyl ester (i.e., ethylene vinyl acetate); c) acid copolymer (i.e., ethylene/acrylic acid copolymer or ethylene/methacrylic acid copolymer); d) ultra low density polyethylene; or e) metalocene or single site catalysis polyethylene.

5. A composition according to Claim 4 wherein the heat seal layer has stronger adhesion to one support layer relative to the other support layer.

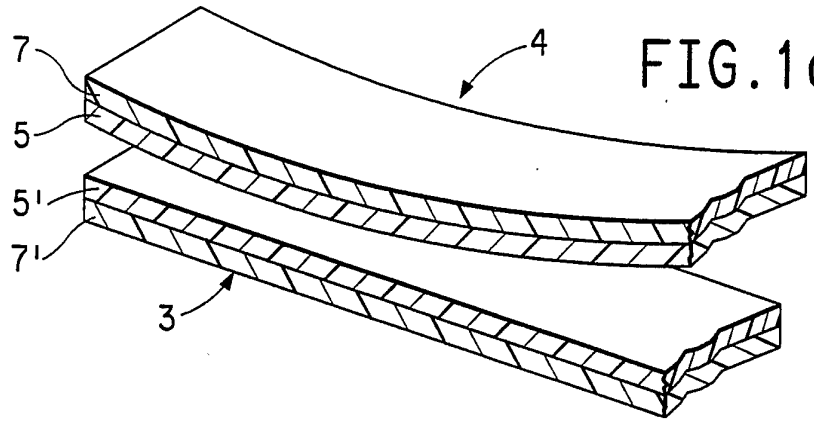

FIG.1a

FIG.1b

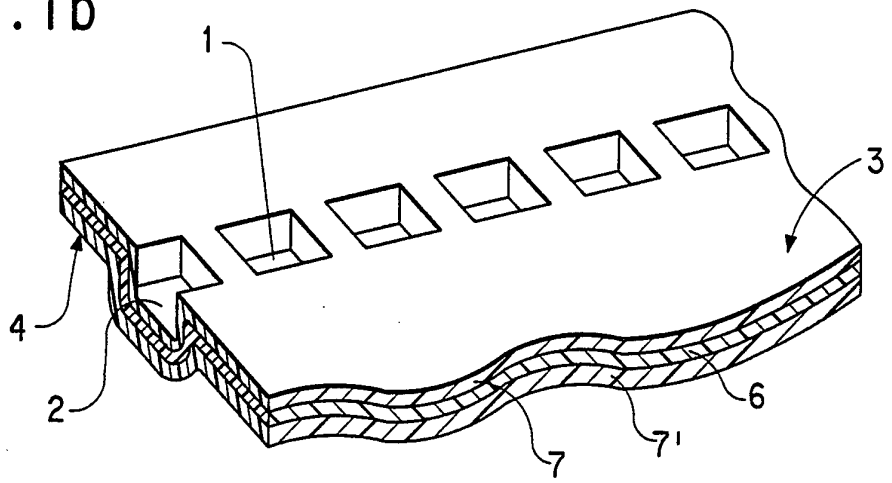

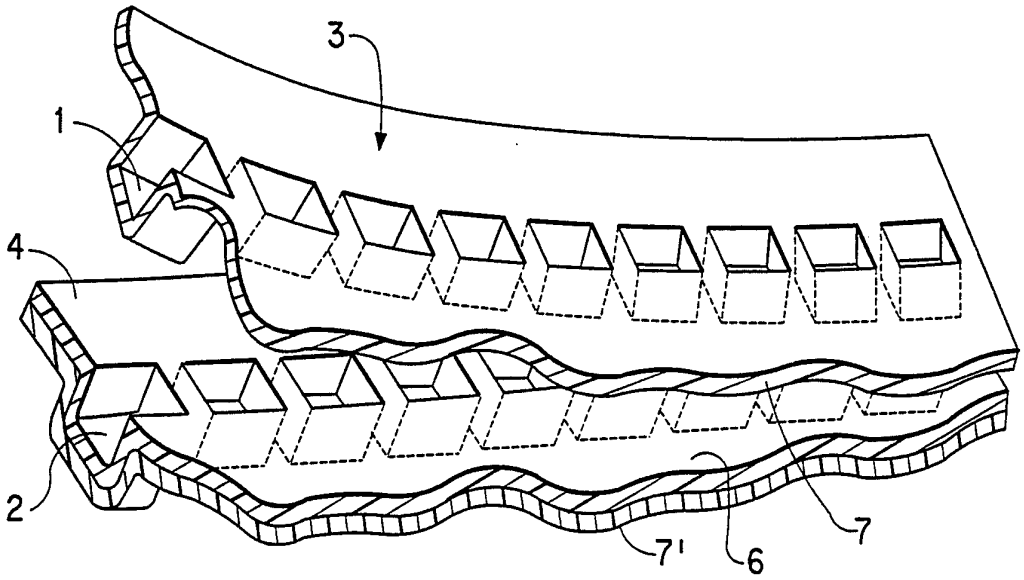

FIG.1c

FIG.2a

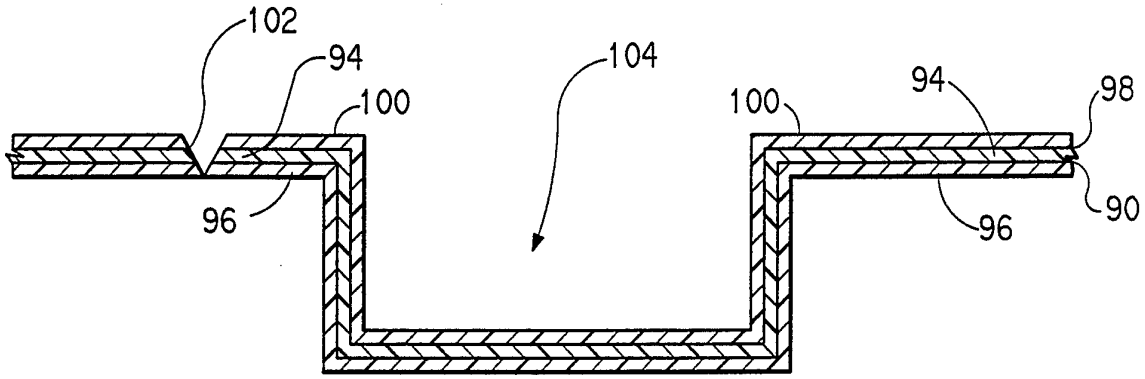

FIG.2b

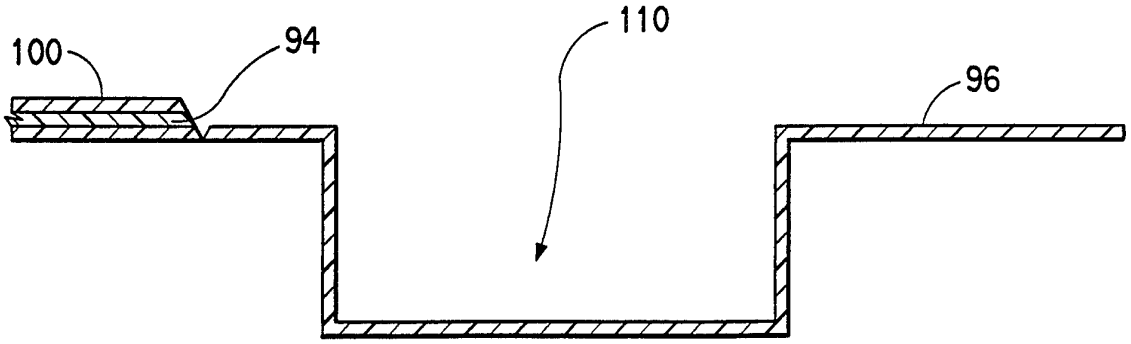

INTERNATIONAL SEARCH REPORT

Inter nal Application No
PCT/US 94/12938

A. CLASSIFICATION OF SUBJECT MATTER
IPC 6 B65D77/20

According to International Patent Classification (IPC) or to both national classification and IPC

B. FIELDS SEARCHED

Minimum documentation searched (classification system followed by classification symbols)
IPC 6 B65D

Documentation searched other than minimum documentation to the extent that such documents are included in the fields searched

Electronic data base consulted during the international search (name of data base and, where practical, search terms used)

C. DOCUMENTS CONSIDERED TO BE RELEVANT

Category °	Citation of document, with indication, where appropriate, of the relevant passages	Relevant to claim No.
Y	EP,A,0 388 885 (ZIP-PACK INCORPORATED) 26 September 1990 see column 1, line 55 - column 2, line 47; claims 1-3; figures 6-8 ---	1,2,4,5
Y	EP,A,0 306 982 (IDEMITSU PETROCHEMICAL) 15 March 1989 see page 1, line 24 - line 50; claims 1,5 ---	1,2,4,5
A	EP,A,0 434 447 (E.I. DU PONT DE NEMOURS AND COMPANY) 26 June 1991 see column 3, line 53 - column 4, line 18; claims; figures ---	1-3
A	EP,A,0 371 402 (IDEMITSU PETROCHEMICAL) 6 June 1990 see claims -----	1,4,5

☐ Further documents are listed in the continuation of box C.

☒ Patent family members are listed in annex.

° Special categories of cited documents :

"A" document defining the general state of the art which is not considered to be of particular relevance

"E" earlier document but published on or after the international filing date

"L" document which may throw doubts on priority claim(s) or which is cited to establish the publication date of another citation or other special reason (as specified)

"O" document referring to an oral disclosure, use, exhibition or other means

"P" document published prior to the international filing date but later than the priority date claimed

"T" later document published after the international filing date or priority date and not in conflict with the application but cited to understand the principle or theory underlying the invention

"X" document of particular relevance; the claimed invention cannot be considered novel or cannot be considered to involve an inventive step when the document is taken alone

"Y" document of particular relevance; the claimed invention cannot be considered to involve an inventive step when the document is combined with one or more other such documents, such combination being obvious to a person skilled in the art.

"&" document member of the same patent family

1

Date of the actual completion of the international search	Date of mailing of the international search report
21 February 1995	28. 02. 95
Name and mailing address of the ISA European Patent Office, P.B. 5818 Patentlaan 2 NL - 2280 HV Rijswijk Tel. (+ 31-70) 340-2040, Tx. 31 651 epo nl, Fax: (+ 31-70) 340-3016	Authorized officer SERRANO GALARRAGA, J

INTERNATIONAL SEARCH REPORT

Information on patent family members

Inter nal Application No
PCT/US 94/12938

Patent document cited in search report	Publication date	Patent family member(s)		Publication date
EP-A-0388885	26-09-90	US-A-	4947525	14-08-90
		AU-B-	627558	27-08-92
		AU-A-	5215990	27-09-90
		CA-A-	2012488	23-09-90
		JP-A-	2296655	07-12-90
EP-A-0306982	15-03-89	AU-B-	604151	06-12-90
		DE-A-	3883116	16-09-93
		DE-T-	3883116	17-03-94
		JP-A-	1167073	30-06-89
		US-A-	4858780	22-08-89
EP-A-0434447	26-06-91	AU-B-	632192	17-12-92
		AU-A-	6827890	27-06-91
		JP-A-	4119209	20-04-92
		PL-B-	165182	30-11-94
EP-A-0371402	06-06-90	JP-A-	2152662	12-06-90
		AU-B-	632517	07-01-93
		AU-A-	4545589	07-06-90
		DE-D-	68915403	23-06-94
		DE-T-	68915403	01-09-94
		US-A-	5004356	02-04-91