Sept. 11, 1928. 1,683,868

A. W. COPLAND ET AL

MACHINE FOR TRUING GEARS

Original Filed April 10, 1922 4 Sheets-Sheet 1

FIG. 7

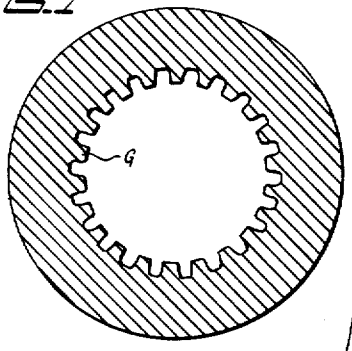

FIG. 1

INVENTORS

BY A. W. Copland
W. I. Matheson

Kay & Kay ATTORNEY

Sept. 11, 1928. 1,683,868

A. W. COPLAND ET AL

MACHINE FOR TRUING GEARS

Original Filed April 10, 1922 4 Sheets-Sheet 2

FIG. 2

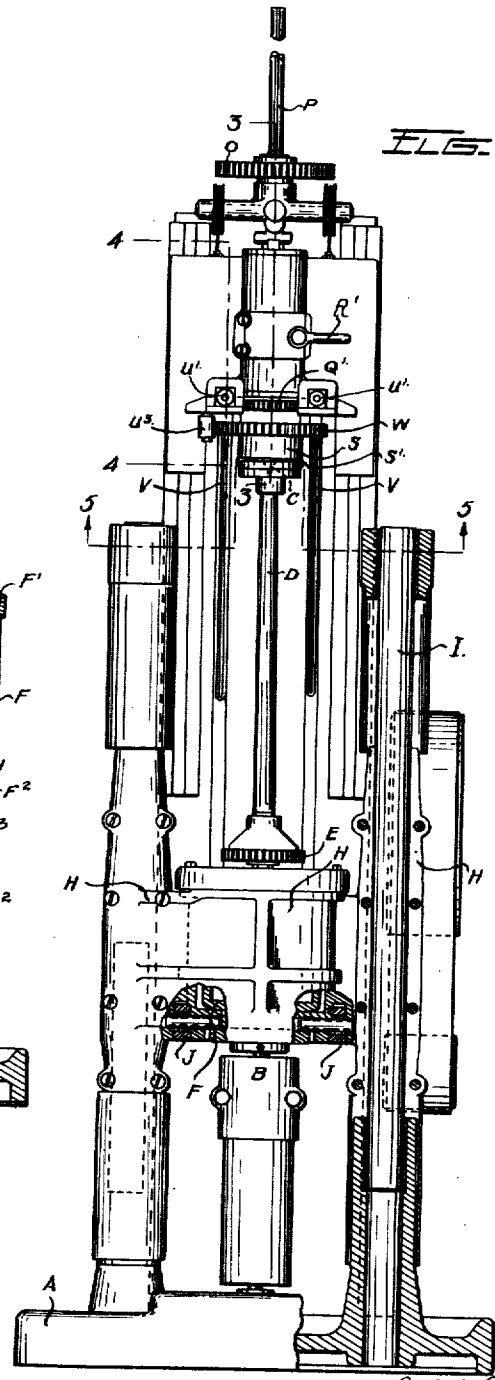

FIG. 3

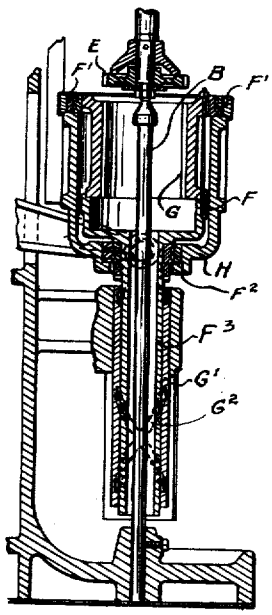

INVENTORS

BY A. W. Copland et al
W. J. Matheson

Wray & Fisher ATTORNEY

Sept. 11, 1928. 1,683,868

A. W. COPLAND ET AL

MACHINE FOR TRUING GEARS

Original Filed April 10, 1922 4 Sheets-Sheet 3

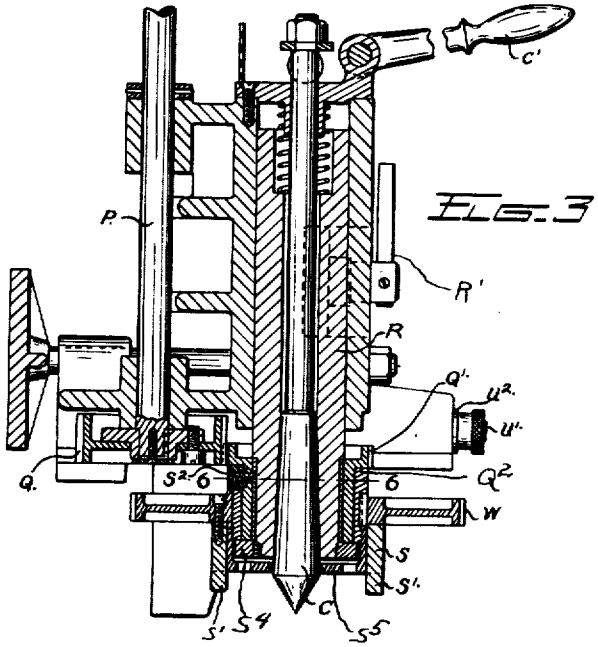

FIG. 3

FIG. 4

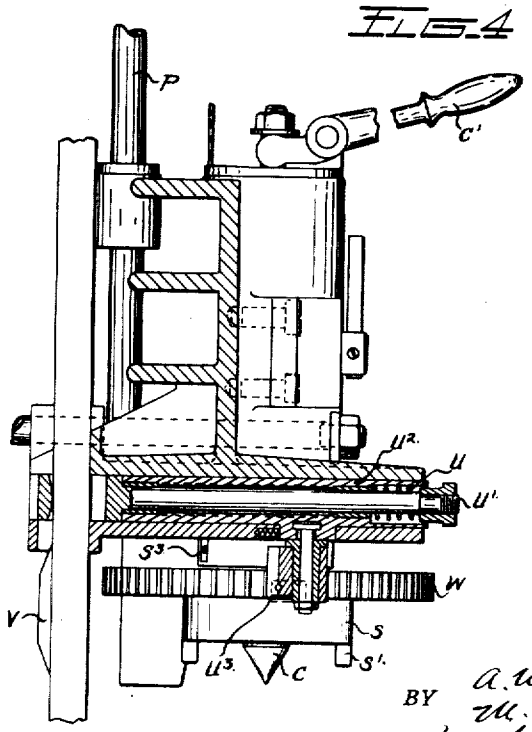

INVENTORS
A. W. Copland and
M. J. Mathewson
BY
Nay & Kehr ATTORNEY

Sept. 11, 1928. 1,683,868

A. W. COPLAND ET AL

MACHINE FOR TRUING GEARS

Original Filed April 10, 1922 4 Sheets-Sheet 4

FIG. 5

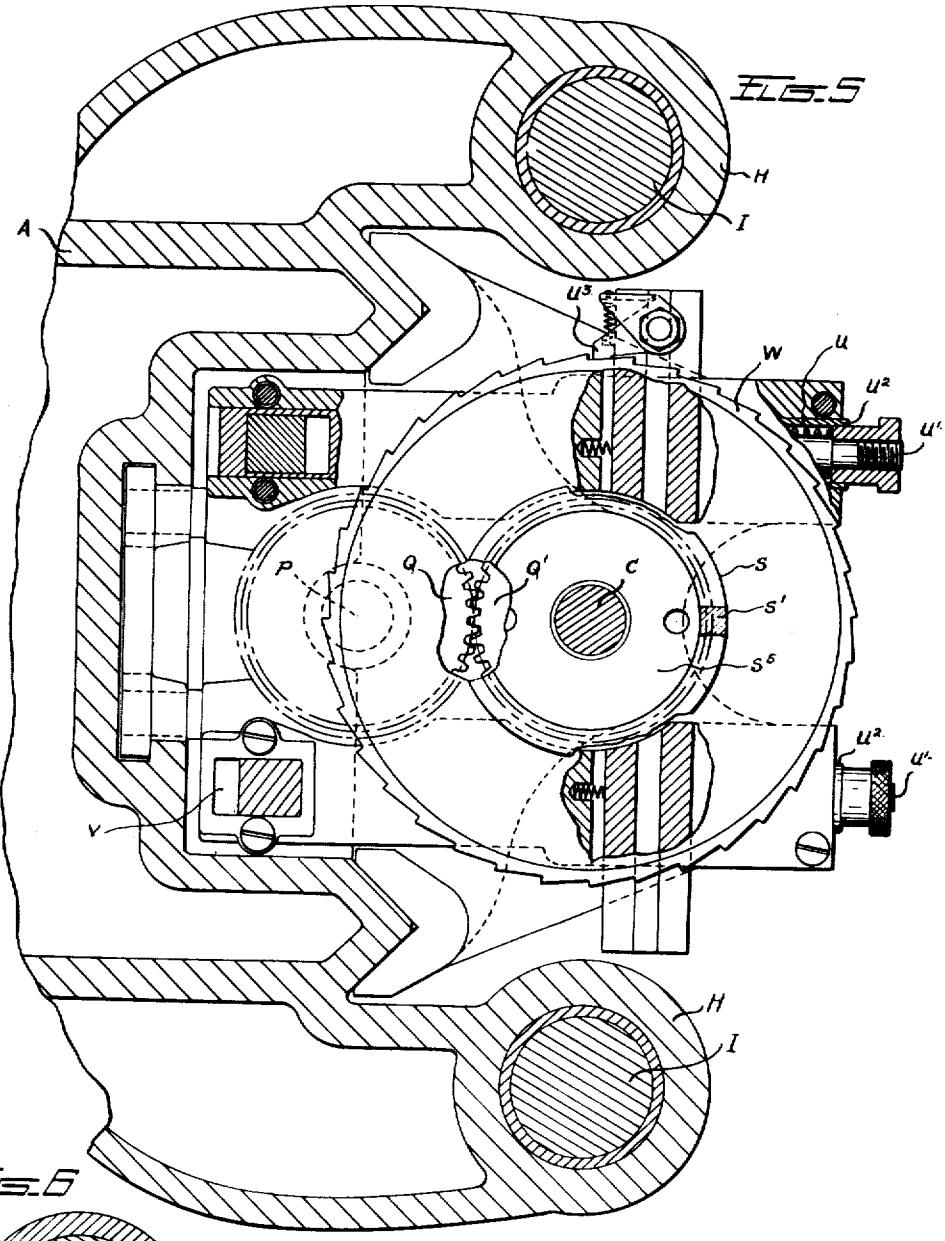

FIG. 6

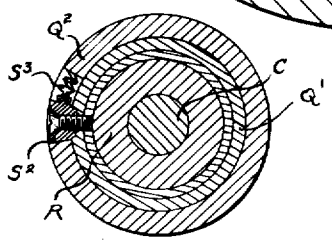

INVENTORS

BY A. W. Copland
M. J. Mathewson
Nay L. K. Mr ATTORNEY

Patented Sept. 11, 1928. 1,683,868

UNITED STATES PATENT OFFICE.

ALEXANDER W. COPLAND, OF BIRMINGHAM, MICHIGAN, AND MAXWELL I. MATHEWSON, OF PROVIDENCE, RHODE ISLAND, ASSIGNORS TO DETROIT TRUST COMPANY, OF DETROIT, MICHIGAN, A CORPORATION OF MICHIGAN.

MACHINE FOR TRUING GEARS.

Continuation of application Serial No. 551,142, filed April 10, 1922, and in Great Britain September 14, 1926. This application filed February 4, 1927. Serial No. 165,868.

The invention relates to apparatus for truing toothed gears, or other bodies having circular series of radiating surfaces, by a grinding or lapping action. Examples of such bodies other than gears are splined shafts, index plates, etc. Since, however, the truing of toothed gears present all aspects of the invention, the latter will be particularly described with reference thereto. The present application constitutes a continuation of our application Serial No. 551,142, filed April 10, 1922.

The production of a toothed gear that is capable of running smoothly and quietly involves a high degree of accuracy, first, with respect to the spacing and alignment of the teeth, second, with respect to the tooth form or profile, third, with respect to the concentricity of the true pitch circle and the axis of rotation of the gear, and fourth, with respect to variations or irregularities in the different teeth.

The chief objects of the present invention are comprehended in the provision of apparatus adapted to effect the truing of tooth gears and the like in the respects above noted with a high degree of accuracy, which also is relatively simple in construction, which is reliable in operation, and which requires a minimum of attendance.

The apparatus constituting the subject of the present invention is based upon the principle that the amount of material removed from a surface being ground is proportional, first, to the area of the abrading surface traversing a unit area of the surface to be ground, second, the pressure of the abrading surface upon a unit area of the surface to be ground, and third, the character of the abrading surface. According to this principle, to produce uniform grinding on all portions of a surface contacting with the abrading surface, there must be uniformity in pressure and area. This is not the case in the ordinary prior processes of lapping gears by rolling the same with intermeshing gears, whether the gears are merely revolved or are revolved and also axially reciprocated relative to each other.

According to the present invention there is substituted for the intermeshing spur gear of the prior methods a lap in the form of an internal gear with teeth complementary to those of the gear to be trued and having its circular pitch and the diameter of its pitch circle approximately the same as those of the gear to be trued so as to fit over the latter in telescoping relation. With the gear and lap coaxially arranged, they are given a relative reciprocatory movement to effect a slight engagement of their teeth, and simultaneously a torque pressure of the one upon the other is set up and maintained uniform per unit area of engagement as the relative reciprocation of the gear and lap proceeds. The relative reciprocatory movement of the gear and lap is intermittently interrupted to permit the gear to be angularly advanced (indexed) in relation to the lap so that different teeth of the gear and lap are brought successively into engagement. In addition the gear and lap are so supported that limited relative movement of the one in relation to the other in any direction radial to their axes is permitted with the result that the torsional pressure referred to causes an automatic centering of the gear in relation to the lap. Suitable abrasive is applied to the mutually engaging surfaces of the lap and gear.

The invention will be further described in connection with the accompanying drawings which show preferred forms of construction by way of example.

In the drawings,

Fig. 1 is a vertical central section through the machine.

Fig. 2 is a sectional front elevation thereof.

Fig. 3 is an enlarged section substantially on line 3—3 of Fig. 2.

Fig. 4 is a sectional elevation on line 4—4 of Fig. 2.

Fig. 5 is a horizontal section on line 5—5 of Fig. 2.

Fig. 6 is a horizontal section on line 6—6 of Fig. 3.

Fig. 7 is a horizontal section on line 7—7 of Fig. 1.

Fig. 8 is a fragmentary vertical section through the lap and adjacent parts showing a modified construction.

The apparatus illustrated may be conveniently described with reference to three of its main functions, namely, first, the relative reciprocation of the gear to be ground and its corresponding lap member, second, the intermediate progressive changing of the reg-

istration of the teeth of the gear and lap, and third, the varying of the mutual torque pressure of the gear and lap teeth.

Referring in detail to the construction illustrated, A is a suitable frame upon which are mounted center spindles B and C for holding an arbor D which carries the gear E to be ground. Arranged concentric to the axis of these spindles and arbor is a holder F for an internal gear or lap member G. The lap G, of suitable material such as cast iron, is in the form of an internal gear having the diameter of its pitch circle and its circular pitch approximately the same as those of the spur gear to be ground so as to fit over the latter with the internal teeth of the lap simultaneously engaging the teeth of the spur gear. The lap-carrying member F is arranged concentric to the axis of the spindles B and C and mounted by means of an antifriction bearing F^2 upon a crosshead H which slides upon ways I on the machine frame. The upper end of the lap is additionally supported by an antifriction bearing F' between the lap and the crosshead H. The member F is formed with a depending tubular shank F^3 which slidably engages a fixed bearing G' adjustably clamped in the machine frame. The shank F^3 carries splines F'' which engage straight longitudinal grooves G'' in the fixed bearing G'. J is a lever for reciprocating the crosshead H and member F actuated by link K connected to a crank L. Obviously the reciprocation of the crosshead H effects a corresponding reciprocation of the lap G and the spline and groove connection F'' G'' holds the lap against rotational movement. The length of the reciprocation may be varied by altering the throw of the crank L, the pin of which is radially adjustable in a slot L' in the crank disk. Thus during each revolution of the crank the lap G will be moved longitudinally a distance equal to its length plus somewhat more than the width of the gear to be ground, thereby passing into and out of engagement with the gear at opposite ends of each stroke. As the fixed spindle B is long and slender and supported only at its lower end it is permitted to flex slightly and thus its upper end forms a support for the gear and arbor adapted to move laterally somewhat in any direction relative to the lap and its support.

The lever J, as shown, is bifurcated so as to embrace the holder H and to permit of the longitudinal movement occasioned by the varying angular relation of said lever, a fulcrum bearing J' is provided on the frame which engages a roller bearing J^2 at the end of the lever.

To change the registration of the gear and the lap on successive strokes, an intermittently operating indexing mechanism is provided. This comprises a shaft M which is driven from the crank shaft by means of intermeshing bevel gears M', a flexible shaft N driven by the shaft M, a Geneva movement O, and a shaft P intermittently actuated by said Geneva movement. The shaft P is arranged parallel to the spindle C and has mounted thereon the gear wheel Q intermeshing with a gear wheel Q' which has its sleeve-like hub rotatably mounted on the lower end of a sleeve R surrounding the spindle C. Sleeve R is slidably mounted in the machine frame but can be fixedly secured by clamp R'. Rotatably mounted on the hub of gear Q' is a sleeve Q^2 on which is keyed the hub of a ratchet wheel W. The sleeve Q^2 is connected to the hub of the gear Q' by means of a lost motion connection which consists of a lug S^2 projecting from the hub of the gear Q' and engaging a slotted bearing in the sleeve Q^2 (see Fig. 6). A light coil spring S^3 in the slotted bearing serves to hold the lug normally in driving contact with the sleeve Q^2. The gear Q' and sleeve Q^2 are held in operative position on the sleeve R by means of the nut S^4. The member S^5 has a screw threaded engagement with the sleeve Q^2 and serves to hold the ratchet wheel W in position thereon. A sleeve S is secured to the hub portion of the ratchet wheel W by means of screws or the like, and is provided at its lower end with a plurality of lugs S', which fit in corresponding notches formed in a dog T fixedly secured to the upper end of the spindle D. Therefore, twice during each revolution of the crank L, and timed to occur when the gear wheel is out of engagement with the lap, the spindle D will be rotated so as to change the registration of the gear teeth with the lap by one or more teeth. Obviously the amount of the indexing movement is determined by the ratio of the gears Q and Q' and the machine is readily adapted to the lapping of gears with different circular pitches by substituting for gears Q and Q' other pairs of similar gears having different ratios.

As has been stated, the pressure of the lap against the gear wheel per unit area is one factor determining the grinding action. Where the lap is moved into and out of engagement with the gear wheel, it is evident that during initial engagement the area of contact is small and is progressively increased until the whole of the gear is in contact with the lap. Therefore, if the torque pressure on the arbor D were to remain uniform, there would be a greater grinding action at the ends of the stroke where the contact area is limited than at the center of the stroke where the full area is in engagement. Such a result is avoided by varying the torque pressure during engagement and disengagement and with the construction shown this is accomplished as follows:

The pressure of the teeth of the gear against the teeth of the lap is governed by a spring which tends to rotate the ratchet wheel

W and the sleeve S. This rotation is permitted by the lost motion connection between the gear Q′ and the sleeve Q^2 which was described above. The spring U for applying the torque pressure is preferably interposed between two members U′ and U^2 of a slide which is actuated by a cam V carried by the carriage H.. The member U^2 carries a pawl U^3 which engages ratchet teeth in the ratchet wheel W mounted on the sleeve Q^2. The arrangement is such that during the movement of the carriage H, the cam V will actuate the member U′, which in turn will actuate the member U^2 through the medium of the spring U, while the member U^2 acting through the pawl U^3 and ratchet wheel W will impart to the sleeve S a torque pressure equal to the tension of the spring. The shape of the cam V determines the tension of the spring and said cam is so fashioned that the pressure will be varied from substantially zero when the gear and lap are first engaged to a predetermed pressure when said parts are in full engagement. The tension then remains constant during the further relative reciprocating movement of the lap in relation to the gear until at the opposite end of its stroke it again passes out of engagement, at which time the cam V gradually relieves the tension of the spring to correspond to the diminishing area of the contact between the lap and the gear. This variation in tension is permitted by the lost-motion connection between the sleeve Q^2 and the gear Q′ formed by the lug S^2 engaging the slotted bearing. Thus the pressure of the lap against the gear wheel will be maintained substantially constant per unit area of surface in engagement. It is to be observed in this connection that if the pressure is to be kept constant as last referred to, the speed of the machine should not be too great else the application of the pressure by the cam V through the spring U, especially in the case of narrow gears, will be too sudden and not controlled in accordance with the shape of the cam.

To facilitate engagement and disengagement of the work, the center bearing C, together with the sleeve R, can be raised and lowered by the lever C, having first released the clamp R′. This permits of withdrawing the center whenever the work arbor D is to be disengaged for the removal of finished work and the engagement of new work to be ground.

In the operation of the machine above described, the gear wheel, or other object to be ground, is mounted either singly or in series on the arbor D and the latter is engaged with the center spindles B and C. A corresponding lap G is placed in engagement with the annular member F and arranged in registration with the gear wheel. The surface of the lap is then coated with abrasive material, after which motion is imparted to the machine to cause a reciprocation of the lap relative to the gear. At the same time the torque pressure on the gear is varied as above described, so that during contact with the latter there will be a uniform pressure per unit of contact area. After each reciprocation the indexing mechanism advances the gear into a different position of registration so that the contacting surfaces are changed after each operation. The lapping thus effected is continued until the desired truing of the gear is effected.

Assuming that in the gear to be ground, one or more of the teeth are distorted so as to come into contact with the lap in advance of the others, these advanced surfaces will first be ground away as will also the contacting portions of the lap. However, by reason of the progressive change in registration, the wearing away of the lap is uniformly distributed over a number or all of the teeth thereof, whereas the grinding upon the gear continues on the high spots until these are reduced to the level of the other portions. Assuming again that the lap is inaccurate, having certain portions of its surface in advance of the true form, these advanced portions will therefore first come in contact with the gear teeth and will be progressively ground away. There will also be a grinding action upon the gear teeth, but due to the progressive change in registration, this grinding is not all on any one tooth but is distributed over a plurality of teeth. Therefore, not only the gear but also the lap will constantly approach the true form as the grinding proceeds. In other words, the effect of continued grinding is to average the contour and circular pitch of all of the teeth in both the gear and the lap and if this average is the true form, the gear will be rendered true. Since the supporting spindle B is capable of moving laterally somewhat at its upper end, the gear has in a measure a floating support. Hence when mutual torsional pressure is exerted between three or more circumferentially spaced teeth of the lap and a corresponding number of the gear teeth, the gear moves laterally in a manner tending to center itself relative to the lap or, in other words, in a manner tending to bring the pitch circles of the gear and lap into coincidence. This centering action continues as long as the mutual torsional pressure is exerted and the result is that all the teeth of the gear are lapped to approximately their true contour with respect to a common gear axis and corresponding pitch circle with the removal of a minimum amount of material from the tooth surfaces.

The invention is also applicable to the grinding of helical gears, the modification of the apparatus shown in Fig. 8 being applicable for this purpose. Here the fixed bearing G′ has helical grooves G^2 instead of the straight grooves G″ of the first construction. The construction is therefore such that dur-

ing the reciprocation of the holder F the lap will be positively turned by the mutual engagement of the splines F''' and the helical grooves G^2 through the same angle as is defined by the helical teeth of the gear. In other respects the operation of the apparatus is as previously described.

While in the construction illustrated the lap is given a reciprocating or combined reciprocating and turning movement and the torsional pressure is applied through the gear, it is obvious that the result will be the same whether these respective relative movements and torsional pressure of the lap and gear are effected entirely through one or the other of said members or in part through one of them and in part through the other.

While the invention has been described as applied to the grinding of gears it is applicable, as has been previously pointed out, to the grinding of other bodies having radiating surfaces arranged in uniform circular series. By "uniform circular series" we mean one in which the radiating surfaces are so spaced that the circumferential or circular pitch distance between any two of said surfaces is either equal to or a multiple of the circular pitch distance between adjacent radiating surfaces.

Also it is obvious that our invention is equally applicable to the grinding of both internal and external gears or other bodies. Thus if the gear or body to be ground has its teeth, or parts with radiating surfaces, on an external perimeter, the lap will have its complementary, oppositely toothed or surfaced parts on an internal perimeter thereof; and vice versa, if the gear or other body to be ground has internal teeth or radiating surfaces, the lap will have external teeth or radiating surfaces. In all cases the pitch circles of the gear and lap will be approximately equal in diameter, and in all cases the teeth of the lap, or its parts with radiating surfaces, will have contours parallel to the tooth contours of the gear or body to be lapped. We employ the expressions "oppositely toothed", "oppositely disposed teeth" and "oppositely surfaced" to indicate the complementary internal-external arrangement of the teeth or radiating surfaces of the gear and lap, respectively, or of the lap and gear, respectively, as the case may be. Also the term "pitch circle" when applied to toothed gears, is to be understood in its usual technical sense applicable to such gears, whereas when applied to other bodies having radiating surfaces in circular series it is to be understood as the circle defined by the mean radius of the radiating surfaces.

While a preferred form of apparatus has been set forth in the foregoing description and the accompanying drawings, it will be understood that the construction illustrated can be varied widely without departing from the spirit of the invention as defined in the appended claims.

So, for example, the lap may be made entirely stationary and the gear may be given the combined reciprocating and turning movement as well as having the torsional pressure applied thereto. Further, another modification of the invention could be effected by reciprocating the gear and applying the torsional pressure through the lap.

What we claim is:

1. In a machine for lapping gears and the like, the combination of a lap having a plurality of circumferentially spaced teeth with contours parallel to those of the member to be ground; holders for supporting the lap and the member to be ground in axial alignment; means for axially reciprocating the one in relation to the other with the teeth of the lap in abrasive contact with teeth of the member to be ground; and means for progressively changing the registration of the lap and member to be ground by intermittently angularly advancing one in relation to the other while they are out of mutual engagement.

2. In a machine for lapping gears and the like, the combination of a lap having a plurality of circumferentially spaced teeth with contours parallel to those of the member to be ground; holders for supporting the lap and the member to be ground in axial alignment; means for axially reciprocating the one in relation to the other with the teeth of one engaging the teeth of the other; means for maintaining a torsional pressure of the one upon the other during their mutual engagement; and means for progressively changing the registration of the lap and member to be ground by intermittently angularly advancing one in relation to the other while they are out of mutual engagement.

3. In a machine for lapping gears and the like, the combination of a lap having a plurality of circumferentially spaced teeth with contours parallel to those of the member to be ground; holders for supporting the lap and the member to be ground in axial alignment; means for axially reciprocating the one in relation to the other with the teeth of one engaging the teeth of the other; means for automatically applying and maintaining a predetermined torsional pressure of the one upon the other during their mutual engagement; and means for progressively changing the registration of the lap and member to be ground by intermittently angularly advancing one in relation to the other while they are out of mutual engagement.

4. In a machine for lapping gears and the like, the combination of a lap having upwards of two circumferentially spaced teeth with contours parallel to those of the member to be ground; holders for supporting the lap and the member to be ground in axial align-

ment, one of said holders being adapted to move laterally in any direction relative to the other; means for axially reciprocating the one in relation to the other with the teeth of one engaging the teeth of the other; means for maintaining a torsional pressure of the one upon the other during their mutual engagement; and means for progressively changing the registration of the lap and the member to be ground by intermittently angularly advancing one in relation to the other while they are out of mutual engagement.

5. In a machine for lapping gears and the like, the combination of a lap having a plurality of circumferentially spaced teeth with contours parallel to those of the member to be ground; holders for supporting the lap and the member to be ground in axial alignment; means for axially reciprocating the one in relation to the other with the teeth of the lap in abrasive contact with teeth of the member to be ground; means for maintaining the direction of the reciprocatory movement parallel to the desired longitudinal tooth contour of the member to be ground; and means for progressively changing the registration of the lap and member to be ground by intermittently angularly advancing one in relation to the other while they are out of mutual engagement.

6. In a machine for lapping gears and the like, the combination of a lap having a plurality of circumferentially spaced teeth with contours parallel to those of the member to be ground; holders for supporting the lap and the member to be ground in axial alignment; means for axially reciprocating the one in relation to the other with their teeth in mutual engagement; means for progressively guiding the axially reciprocated member so that its tooth surfaces are moved parallel to the tooth surfaces of the other member; means for maintaining a torsional pressure of the one upon the other during their mutual engagement; and means for progressively changing the registration of the lap and member to be ground by intermittently angularly advancing one in relation to the other while they are out of mutual engagement.

7. A machine for lapping gears and the like comprising a lap having a tooth contour complementary to the gear to be ground and means for holding the gear in registration therewith; of means for axially reciprocating one with reference to the other and thereby varying their areas of mutual contact; and means for applying a varying torque between the lap and the gear corresponding to the varying contacting areas to maintain substantially constant pressure per unit area of contact.

8. A machine for lapping gears and the like comprising a lap having a tooth contour parallel to the gear to be ground and means for holding the gear in registration therewith; of means for axially reciprocating one with reference to the other; means for exerting a torque therebetween while said lap and gear are in engagement; and means for varying said torque while said lap and member are entering and leaving engagement with each other to maintain substantially constant pressure per unit area of contact during the entire engagement.

9. A machine for lapping gears and the like comprising a lap, means for reciprocating the lap into and out of engagement with the member to be ground; means for progressively changing the registration of the lap and member to be ground while disengaged from each other; and means for varying the torque pressure between the lap and member to be ground while entering and leaving engagement with each other and for maintaining constant torque pressure while said lap and member to be ground are in full engagement.

10. A machine for lapping gears and the like comprising a lap, holders respectively for the lap and the member to be ground adapted to hold them in registration with each other; means for reciprocating the one in relation to the other; an indexing mechanism for progressively rotatively advancing the gear in relation to the lap while out of engagement to change the registration thereof; and means operating when said lap and gear are in engagement for varying the torque pressure to maintain substantially uniform pressure per unit area of contact.

11. In a machine for lapping gears and the like, the combination of axially aligned rotary holders respectively for the lap and the member to be ground; means for axially reciprocating one of said holders in relation to the other; an indexing mechanism operating at one end of the reciprocatory movement for rotatively advancing the registration of the gear and the lap; and means operating during the initial engagement of the gear with the lap for applying to them and progressively increasing a mutual torque pressure until said parts are in full engagement, maintaining said pressure constant during full engagement and progressively decreasing the pressure while passing out of engagement, whereby substantially constant pressure per unit area of contact is maintained.

12. A machine for lapping gears and the like, comprising a frame; center bearings mounted on said frame for holding the work to be ground, a circular lap, a reciprocatory slide; a holder for supporting the lap in axial alignment with said center bearings mounted on said slide; mechanism for reciprocating said slide; coacting intermittently actuated mechanism timed to rotatively adjust the member to be ground while out of engagement with the lap to change the regis-

tration thereof; and cooperating means for maintaining a predetermined torque pressure per unit area of engagement between the work to be ground and the lap during their mutual engagement.

13. In a machine for lapping gears and the like, the combination with a frame; of center bearings mounted on said frame for holding the work to be ground; a circular lap; a slide mounted for reciprocation on said frame parallel to the axis of said center bearing; a holder for supporting the lap in axial alignment with said center bearings mounted on said slide; a rotary crank; a lever actuated by said crank and connected to said holder for the lap to reciprocate the same; an index mechanism actuated by said crank for rotatively adjusting the member to be ground while out of engagement with the lap to change the registration thereof; and means actuated by said reciprocating slide for controlling the torque pressure of the lap against the work while said parts are in engagement.

In testimony whereof, we hereunto affix our signatures.

ALEXANDER W. COPLAND.
MAXWELL I. MATHEWSON.

CERTIFICATE OF CORRECTION.

Patent No. 1,683,868. Granted September 11, 1928, to

ALEXANDER W. COPLAND ET AL.

It is hereby certified that error appears in the printed specification of the above numbered patent requiring correction as follows: Page 1, lines 105 and 106, for the word "intermediate" read "intermittent"; and that the said Letters Patent should be read with this correction therein that the same may conform to the record of the case in the Patent Office.

Signed and sealed this 23rd day of October, A. D. 1928.

M. J. Moore,
Acting Commissioner of Patents.

(Seal)

tration thereof; and cooperating means for maintaining a predetermined torque pressure per unit area of engagement between the work to be ground and the lap during their mutual engagement.

13. In a machine for lapping gears and the like, the combination with a frame; of center bearings mounted on said frame for holding the work to be ground; a circular lap; a slide mounted for reciprocation on said frame parallel to the axis of said center bearing; a holder for supporting the lap in axial alignment with said center bearings mounted on said slide; a rotary crank; a lever actuated by said crank and connected to said holder for the lap to reciprocate the same; an index mechanism actuated by said crank for rotatively adjusting the member to be ground while out of engagement with the lap to change the registration thereof; and means actuated by said reciprocating slide for controlling the torque pressure of the lap against the work while said parts are in engagement.

In testimony whereof, we hereunto affix our signatures.

ALEXANDER W. COPLAND.
MAXWELL I. MATHEWSON.

CERTIFICATE OF CORRECTION.

Patent No. 1,683,868. Granted September 11, 1928, to

ALEXANDER W. COPLAND ET AL.

It is hereby certified that error appears in the printed specification of the above numbered patent requiring correction as follows: Page 1, lines 105 and 106, for the word "intermediate" read "intermittent"; and that the said Letters Patent should be read with this correction therein that the same may conform to the record of the case in the Patent Office.

Signed and sealed this 23rd day of October, A. D. 1928.

M. J. Moore,
Acting Commissioner of Patents.

(Seal)