JENNISON & HALE.

Lamp.

No. 28,717. Patented June 12, 1860.

Fig. 1

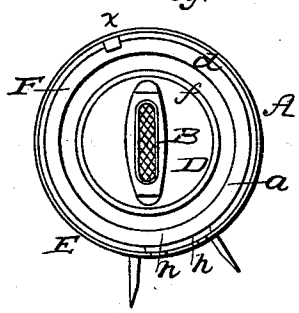

Fig. 2

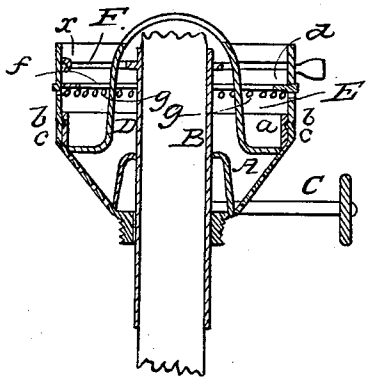

Fig. 5

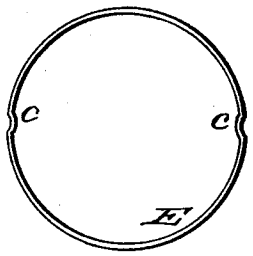

Fig. 3

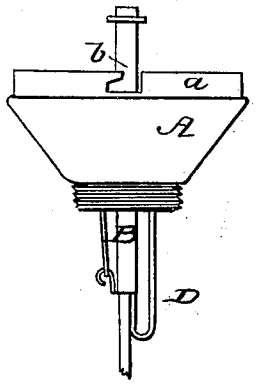

Fig. 4

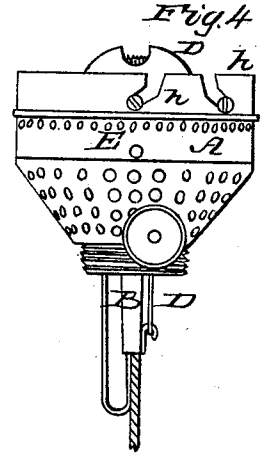

Witnesses
Mellen G. Wren Pfs
E. J. Hale.

Inventor
John C. Jennison
Augustus Hale

N. PETERS. Photo-Lithographer. Washington, D. C.

UNITED STATES PATENT OFFICE.

JOHN C. JENNISON AND AUGUSTUS HALE, OF FOXCROFT, MAINE, ASSIGNORS TO ELIAS J. HALE AND AUGUSTUS HALE, OF SAME PLACE.

LAMP.

Specification of Letters Patent No. 28,717, dated June 12, 1860.

To all whom it may concern:

Be it known that we, JOHN C. JENNISON and AUGUSTUS HALE, of Foxcroft, in the county of Piscataquis and State of Maine, have invented certain new and useful Improvements in Lamps for Burning Hydrocarbon Liquids; and we do hereby declare that the same is fully described and represented in the following specification and the accompanying drawings, of which—

Figure 1, denotes a top view of a lamp cap having our invention. Fig. 2, is a longitudinal and axial section of it. Fig. 3, an elevation or external view taken so as to show the wick tube edgewise. Fig. 4, is a side view of the cap as it appears without the chimney carrier, the same being made to show the angular recess of the bayonet connection. Fig. 5, is a horizontal section of the lower part of the chimney carrier and through its concavo convex projections belonging to the bayonet connection.

The nature of our invention consists in the arrangement and application of a spring clasp, and angular catch notches on a lamp chimney carrier or holder so as to operate therewith and confine the chimney thereto substantially as hereafter set forth. Also, in an improved chimney carrier as made separate from the cone or deflector and the supporter thereof and open for the reception of the deflector and cleaning the chimney and so as to be applied to such deflector supporter essentially as hereinafter explained.

In the drawings, A exhibits a lamp cap carrying a wick tube B, and a cranked shaft C, the crank of the shaft being connected by a rod D, with the wick tube in manner so as to enable the said tube to be either elevated or depressed in the cap A. The body of the cap is formed conical and foraminous and terminates in a cylindrical rim or flanch as shown at *a*, which is provided with two right angular notches or recesses *b*, *b*, making part of what is usually termed a "bayonet connection." Within the rim, *a*, and resting on the conical part of the cap, is a solar cone or deflector, D, and separate from such cone a thin and wide annulus E, fits on and surrounds the rim as shown in the drawings and connects with it by a bayonet connection of which the notches, *b*, *b*, make a part and two concavo convex projections *c*, *c*, extending inward from the inner surface of the ring E, compose the other part. Each of such projections we form by striking them up from the ring itself by a punch suitably formed. This saves the necessity of making the projections from a separate piece or pieces of metal and attaching them to the ring by solder, screws or rivets.

Within the ring, E, there is a horizontal ring shelf *d*, arranged as shown in the drawings. On this shelf, the bottom of the glass chimney of the lamp rests. The shelf is constructed with a circular opening, *f*, to receive the conical deflector, D, and so extend around it that there may be a space or air passage, *g*, circumscribing the deflector and bounded by the circumference of the opening, *f*. At a short distance above the shelf, *d*, and to the inner side of that part of the ring, E, which is over the shelf, the middle of a circular spring catch or wire, F, is hinged as shown at, *x*, and in such manner as to enable the wire to be turned up and down, either toward or away from the shelf. The said spring catch near each of its two ends is bent at an obtuse or nearly a right angle so as to be capable of being sprung into two angular notches, *h*, *h*, formed in the upper part of the ring, E, as shown in the drawings. When the glass lamp chimney is formed with a shoulder, lip or flanch circumscribing and projecting outwardly from its lower part or foot, the spring catch, F, can be caused to clasp the chimney just above such lip or flanch and so as to confine the chimney in place on the shelf, particularly, when the spring catch is within its angular notches. By pressing together the two ends of the spring catch, and moving them upward, it may be lifted out of the ring, E, far enough to allow of the removal of the chimney from its shelf. The ring, E, and its shelf we term the "chimney carrier," and by constructing such separate from the cone or deflector, and as a cylindrical ring provided with a shelf and made to close down and fit upon the upper part of the cap, in manner as described and represented, we are not only enabled to remove the chimney carrier from the lamp cap and the conical deflector, but readily get at the interior of the lower part of the chimney, when necessary to cleanse the same, and also to fasten the chimney carrier to the lamp cap, by a bayonet connection. Furthermore, the particular arrangement and application of the spring clasp and its an-

gular notches with respect to the chimney carrier offers an advantage in either readily connecting the chimney with the carrier or detaching the two.

We are aware that in common solar lamps, the chimney carrier, has been made with a wide and flat wheel or ring to rest simply on the top of the lamp, and not so as to fit thereto by a bayonet connection or by friction caused by the ring circumscribing and binding closely upon another rim or ring, therefore we do not claim such, but

We claim—

1. The arrangement and application of the spring clasp and its angular notches, to the chimney carrier so as to enable the clasp to be turned upward from and to operate with the notches, and confine the chimney in place in the carrier substantially as described.

2. The improved chimney carrier as made to embrace and close down upon and connect to the lamp cap and to be separate from the deflector and to have a shelf or flanch for supporting the chimney arranged upon it essentially as specified.

JOHN C. JENNISON.
AUGUSTUS HALE.

Witnesses:
E. J. HALE,
MELLEN G. PRENTISS.