(No Model.)

J. N. RUNDLE.

GOVERNOR VALVE.

No. 590,281. Patented Sept. 21, 1897.

Fig. 1.

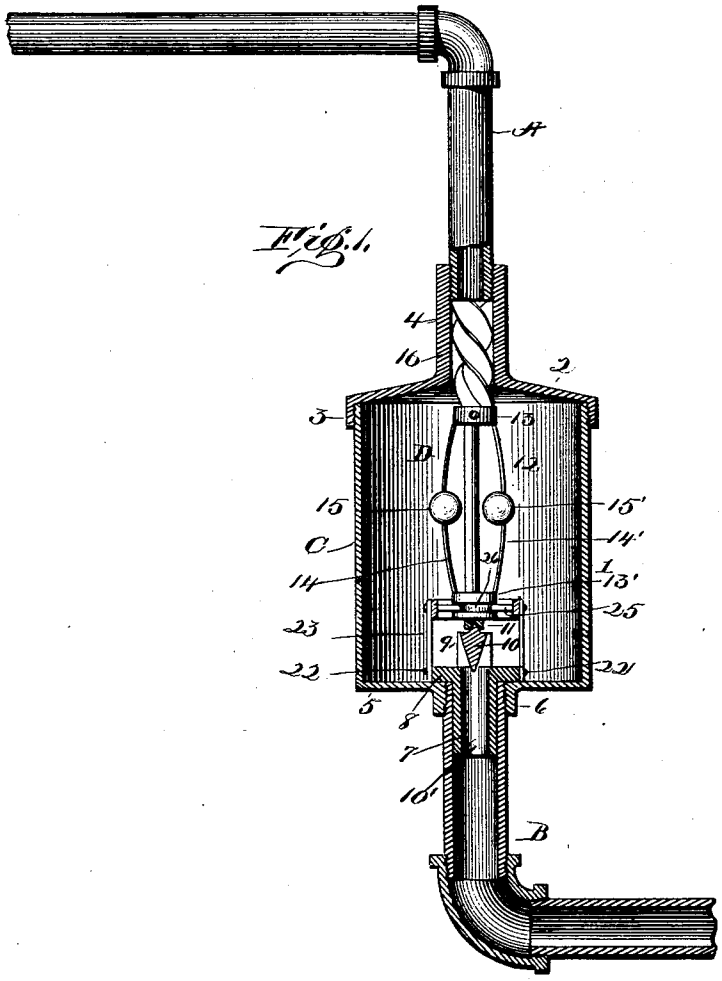

Fig. 2.

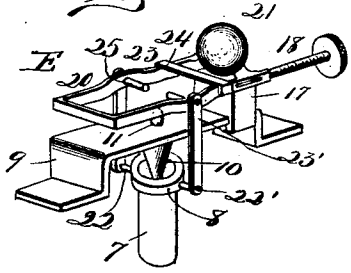

Fig. 3.

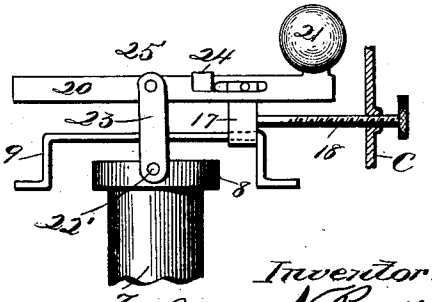

Witnesses.
J. M. Fowler Jr.
Owen H. Fowler

Inventor:
James N. Rundle
by Patrick Farrell
Attorney.

THE NORRIS PETERS CO., PHOTO-LITHO., WASHINGTON, D. C.

UNITED STATES PATENT OFFICE.

JAMES N. RUNDLE, OF SANTA BARBARA, CALIFORNIA.

GOVERNOR-VALVE.

SPECIFICATION forming part of Letters Patent No. 590,281, dated September 21, 1897.

Application filed March 20, 1897. Serial No. 628,472. (No model.)

To all whom it may concern:

Be it known that I, JAMES N. RUNDLE, a citizen of the United States of America, residing at Santa Barbara, in the county of Santa Barbara and State of California, have invented certain new and useful Improvements in Governor-Valves, of which the following is a specification, reference being had therein to the accompanying drawings.

This invention relates to improvements in governor-valves for steam-engines, and more particularly to that class of governors which are interposed in a steam-pipe between the boiler and the engine, thereby controlling the flow of the steam and consequently regulating the speed of the engine. To accomplish this purpose I have constructed a valve simple in its construction, effective in its operation, and one which will perform all of its intended functions.

With these objects in view my invention consists in the particular construction of the various parts and in the novel manner of combining or arranging said parts, all of which will be described hereinafter, and pointed out in the claims.

In the drawings forming part of this specification, Figure 1 is a vertical sectional view showing all the parts in place. Fig. 2 is a detail perspective view of the supporting mechanism and valve-seat. Fig. 3 is a side elevation of the valve-supporting mechanism, showing the adjustable screw for regulating the fulcrum-block.

Referring to the drawings, A designates the steam-pipe leading from a boiler and opening into the head of the valve.

B designates the steam-pipe leading from the valve to the engine-cylinder.

C designates the valve-casing, consisting of any suitable material and construction, of such dimensions as to support within itself the mechanism of my device. The top cover 2 is suitably fitted and screwed to the cylinder by threaded flanges 3 and formed with a pipe extension 4, which is connected in any desirable manner to the pipe A. The bottom 5 of the said cylinder is formed with a central flange-aperture 6, having interior screw-threads, as shown in Fig. 1 of the drawings.

The upper end of the steam-pipe B opens into the valve-casing C and is fitted with a sliding valve-seat 7, consisting of a tubular sleeve or body formed with a right-angular flange 8 at its upper end, which rests on the bottom of the valve-casing and supports the said sleeve in position. In the bottom of the said casing is secured a bench 9, in the center of which is secured an inverted cone or conical valve 10, registering with the valve-opening 10′ in the valve-seat 7. On the upper face of said bench 9 is secured a pin-point bearing 11, on which the governor-spindle is mounted.

D designates the governor, which is composed of a shaft or spindle 12, having its lower end formed with a socket to fit over the pin-point bearing, said shaft carrying a spring-governor composed of two collars 13 and 13′, connected by spring-bars 14 and 14′. The upper head-piece 13 is made fast to the spindle in any desirable manner, and the lower head-piece or collar 13′ is free or loose on the said spindle, so that when the governor rotates the weights 15 and 15′ on the said spring-arms will move outward, and the collar 13′ will thus be drawn upward on the spindle, and the valve below will also be correspondingly affected and actuated, as hereinafter more fully specified. On the upper end of the governor-spindle is formed or carried a spiral 16, which extends upwardly into the pipe 4. It is by this spiral that the governor is rotated. The pitch or turn of the said spiral may be suited to the size of the pipe in which it is fitted and also to give the desired velocity.

E designates the mechanism for controlling and actuating the valve, and referring to Fig. 2 of the drawings it will be seen that on the end of the bench 9 is a sliding fulcrum 17. Said fulcrum is adjustably mounted beneath the valve lever or yoke and is regulated by means of a set-screw 18, which extends through the wall or casing of the said cylinder and having its end suitably connected to the said fulcrum, on which is supported a frame or yoke substantially in a horizontal position and carrying on its end nearest the set-screw a weight 21, which is intended to counterbalance the weight of the said frame or yoke. It will be seen that by moving the fulcrum away from or toward the axis of the governor the weight is made to assume greater or less force and the length of that part of

the yoke connected to the valve-seat shortened or lengthened. Thus the valve-seat is correspondingly effected.

On opposite sides of the valve-seat are secured lugs 22 and 22′, to which the lower ends of the links 23 and 23′ are pivotally connected, the upper end of the link being pivotally connected to the arms of the yoke 20, as shown in the drawings.

To keep the arms of the yoke from spreading, a brace or keeper 24 may be secured across them. In the bars of the yoke 20 are secured oppositely-disposed lugs or pins 25 and 25′, which engage an angular groove 26 in the lower head-piece 13′, whereby the yoke is lowered or raised and the valve moved away from or toward the valve-seat.

The operation of my improved valve-governor is as follows: The steam rushes through the pipe and engages the spiral, thus rotating the governor. As the speed increases the spring-arms of the governor move outward, thus shortening and drawing the yoke upward by its connection therewith, the yoke in turn raising the valve-seat, thus diminishing the flow of the steam to the engine. Then as the governor tends to resume its normal velocity the valve-seat is lowered and the steam increased. Thus the mechanism when properly adjusted acts to control the speed in the same manner as a governor used on a rotary engine.

Having thus described my invention, what I claim as new, and desire to secure by Letters Patent, is—

1. The combination with the steam-pipes A and B, a suitable casing C interposed between said pipes, a shaft journaled in said casing provided with a governor, and a spiral, of a valve in the bottom of the casing and yoke mounted upon a fulcrum said yoke connected to the valve-seat, and to the free head or collar of the governor, substantially as shown and described.

2. In a valve-governor the combination with a steam-pipe, of a casing interposed therein, a shaft journaled in said casing having a governor mounted thereon and its upper portion provided with a spiral groove said spiral extending up into the inlet-pipe, a valve in the bottom of the casing, and a yoke fulcrumed in said casing connected to the valve-seat and to the free head or collar of the governor, a weight on said yoke, substantially as shown and described.

3. The combination with the steam-pipe of a casing interposed therein, a shaft mounted in said casing, said shaft provided with weighted governor-springs and a spiral groove secured upon the upper end of the shaft, and extending into the said steam-pipe, a valve in the bottom of the casing, a yoke adjustably fulcrumed in the said casing connected to the valve and governor, and a screw to adjust said fulcrum, substantially as shown and described.

4. In a valve-governor the combination of a steam-pipe having a casing interposed therein, a shaft mounted in said casing provided with a governor and a spiral on its upper end extending from the casing into the steam-pipe, a valve in the bottom of the said casing provided with a sleeve projecting into the discharge-pipe, and connections between the said valve and governor, whereby the valve is opened and closed, substantially as shown and for the purpose set forth.

In testimony whereof I have affixed my signature in presence of two witnesses.

JAMES N. RUNDLE.

Witnesses:
JNO. HUMISTON,
R. D. SMITH.