(19) Europäisches Patentamt
European Patent Office
Office européen des brevets

(11) EP 0 940 101 A3

(12) EUROPEAN PATENT APPLICATION

(88) Date of publication A3:
08.12.1999 Bulletin 1999/49

(43) Date of publication A2:
08.09.1999 Bulletin 1999/36

(21) Application number: **99103630.2**

(22) Date of filing: **25.02.1999**

(51) Int Cl.[6]: **A45D 20/12**, A45D 20/50

(84) Designated Contracting States:
AT BE CH CY DE DK ES FI FR GB GR IE IT LI LU MC NL PT SE
Designated Extension States:
AL LT LV MK RO SI

(30) Priority: **26.02.1998 JP 4577898**

(71) Applicant: **MATSUSHITA ELECTRIC WORKS, LTD.**
Kadoma-shi Osaka 571 (JP)

(72) Inventors:
- **Sakamoto, Toshihiro**
  Kanzaki-gun, Shiga (JP)
- **Sakamoto, Toshihiro**
  Kanzaki-gun, Shiga (JP)

(74) Representative: **Stenger, Watzke & Ring Patentanwälte**
Kaiser-Friedrich-Ring 70
40547 Düsseldorf (DE)

(54) Hairdryer

(57) To adapt easily to plural applications with a single attachment by detachably fitting an auxiliary comb block to the attachment.This is constituted by a hair dryer 5 which is constituted by a hair dryer housing 3 possessing an air delivery section 1 and a heating section 2, and by an attachment 4 which is fitted to the discharge section 8 of the hair dryer housing 3. An auxiliary comb block 7 consisting of comb teeth 7a, a base block 7b and blow-out sections 7c is detachably fitted to the attachment 4.

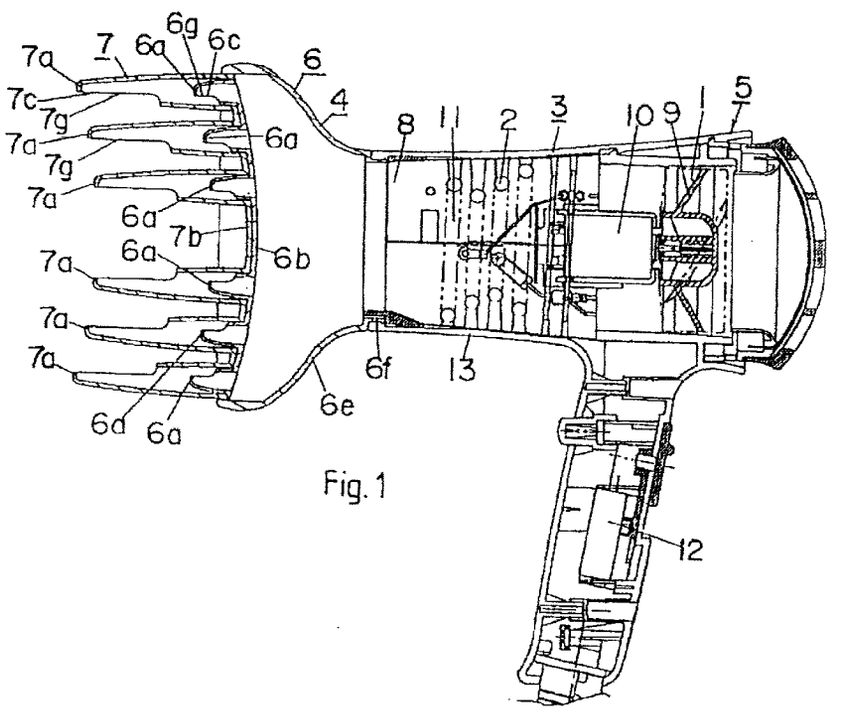

Fig. 1

EP 0 940 101 A3

European Patent Office

EUROPEAN SEARCH REPORT

Application Number EP 99103630.2

DOCUMENTS CONSIDERED TO BE RELEVANT

Category	Citation of document with indication, where appropriate, of relevant passages	Relevant to claim	CLASSIFICATION OF THE APPLICATION (Int. Cl. 6)
A	US 5275339 A (ANDIS) 04 January 1994, the whole document. --	1	A45D20/12 A45D20/50
A	US 5488783 A (PARKINSON et al.) 06 February 1996, the whole document. --	1	
A	US 5235759 A (RIZZUTO Jr.) 17 August 1993, figs. --	1	
A	WO 97/09889 A (PAGANINI) 20 March 1997, figs. --	1	
A	DE 2529809 A (THEVES) 27 January 1977, figs. ----	1	

TECHNICAL FIELDS SEARCHED (Int. Cl. 6)

A45D

The present search report has been drawn up for all claims

Place of search	Date of completion of the search	Examiner
VIENNA	03-09-1999	PIRKER

CATEGORY OF CITED DOCUMENTS

X : particularly relevant if taken alone
Y : particularly relevant if combined with another document of the same category
A : technological background
O : non-written disclosure
P : intermediate document

T : theory or principle underlying the invention
E : earlier patent document, but published on, or after the filing date
D : document cited in the application
L : document cited for other reasons

& : member of the same patent family, corresponding document

EPO FORM 1503 03.82 (P04C01)

ANNEX TO THE EUROPEAN SEARCH REPORT
ON EUROPEAN PATENT APPLICATION NO. EP 99103630.2

This annex lists the patent family members relating to the patent documents cited in the above-mentioned search report. The members are as contained in the EPIDOS INPADOC file on 8. 9.1999. The European Patent Office is in no way liable for these particulars which are merely given for the purpose of information.

Patent document cited in search report	Publication date	Patent family member(s)	Publication date
US A 5275339	04-01-1994	CA AA 2097985 CN A 1087803	11-06-1994 15-06-1994
US A 5488783	06-02-1996	AT E 125120 CA C 2124091 DE CO 59202983 DK T3 610412 EP A1 610412 EP B1 610412 ES T3 2076041 GB A0 9124609 GB A0 9219798 GB A1 2261602 GB B2 2261602 GR T3 3017700 HK A 1744/95 WO A1 9309693	15-08-1995 30-04-1996 24-08-1995 18-12-1995 17-08-1994 19-07-1995 16-10-1995 08-01-1992 28-10-1992 26-05-1993 21-09-1994 31-01-1996 24-11-1995 27-05-1993
US A 5235759	17-08-1993	none	
WO A1 9709899	20-03-1997	DE CO 59602263 EP A1 850002 EP B1 850002	22-07-1999 01-07-1998 16-06-1999
DE A1 2529809	27-01-1977	none	

For more details about this annex see Official Journal of the European Patent Office, No. 12/82.