Aug. 11, 1936. L. G. BAER 2,050,410

ATHLETIC GARMENT

Filed March 25, 1935

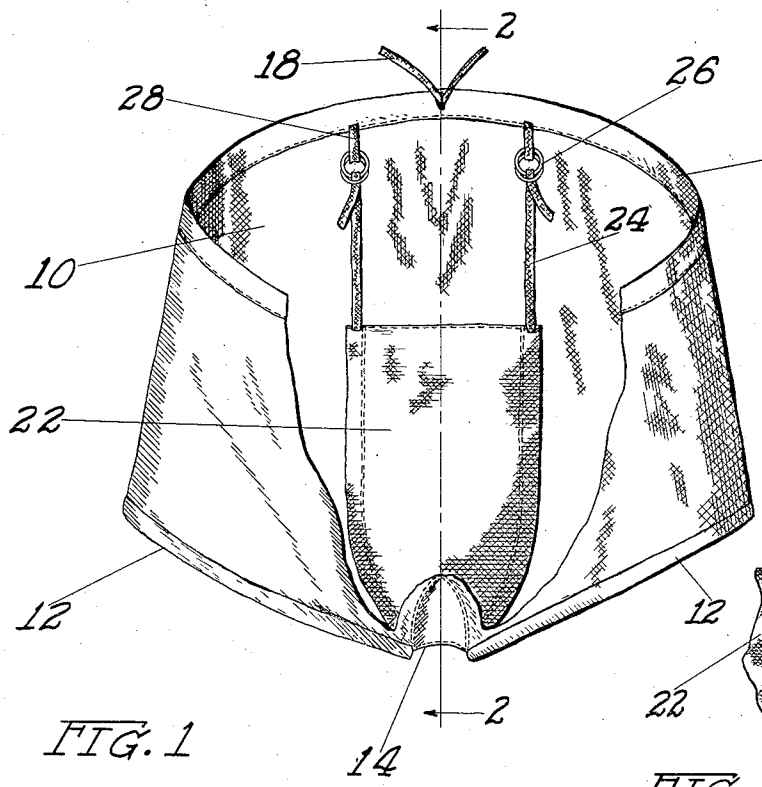

FIG. 1

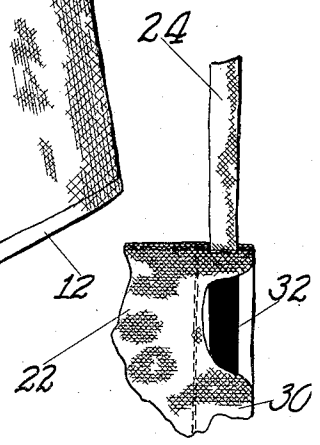

FIG. 3

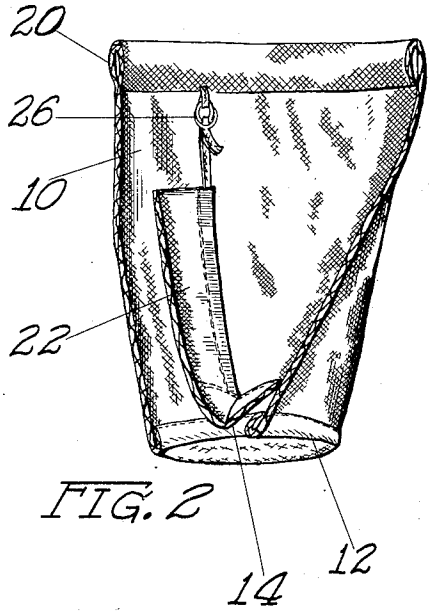

FIG. 2

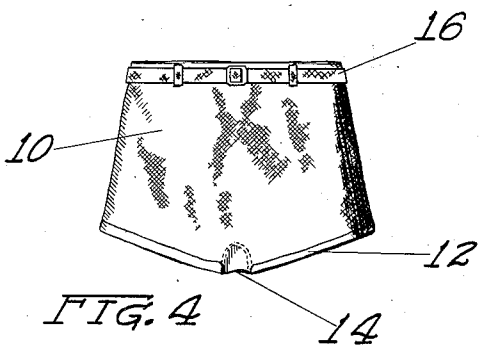

FIG. 4

LUCIEN G. BAER
INVENTOR

PER Minier and Fike
ATTORNEYS

Patented Aug. 11, 1936 2,050,410

UNITED STATES PATENT OFFICE

2,050,410

ATHLETIC GARMENT

Lucien G. Baer, Los Angeles, Calif., assignor to West Coast-Manchester Mills, Inc., Los Angeles, Calif., a corporation of California

Application March 25, 1935, Serial No. 12,811

1 Claim. (Cl. 128—159)

This invention relates to improved bathing trunks with adjustable supporter and has for one of its principal objects the provision of a new and improved bathing or athletic trunks for men, having incorporated thereinto a supporter which forms substantially an integral part thereof.

One of the important objects of this invention is to provide, in a suit of men's bathing or athletic trunks, a supporter or suspensory which shall be adjustable to suit the needs of various individuals and which, furthermore, shall be of sufficient strength to meet the necessary requirements.

Another and still further important object of the invention is the provision in a garment of a suspensory or similar support, which support has the ribs of the fabric running at a right angle to the edges thereof, the edges themselves being reinforced with a resilient tape or binder, whereby a form-fitting stretch is afforded.

Other and further important objects of the invention will be apparent from the disclosures in the accompanying drawing and following specification.

The invention, in a preferred form, is shown in the drawing and hereinafter more fully described.

In the drawing:

Figure 1 is an elevation of the improved athletic or bathing trunks of this invention, parts being broken away to show the interior supporter or suspensory construction.

Figure 2 is a sectional view taken on the line 2—2 of Figure 1, looking in the direction indicated by the arrows.

Figure 3 is a detail view of an upper corner of the suspensory element, parts being broken away to show the resilient binding.

Figure 4 is a front view of a preferred form of the garment.

As shown in the drawing:

The reference numeral 10 indicates generally the body of the improved bathing trunks or athletic garment of this invention, it being, of course, understood that the same may be applied to either articles of clothing, as, for example, shorts, drawers or the like, and that the material of which the garment is constructed can be varied throughout a considerable range.

The garment is provided with the usual leg portions 12 separated by a crotch element 14 and having a belt or the like 16, this being preferably reinforced by a draw-string or the like 18 positioned in the upper hem 20 of the garment.

Fastened inside the front face of the trunks or other garment is a supporter or suspensory element as best shown at 22 which comprises essentially a sheet of fabric or the like, and which may be of the same or of different material than the material of the trunks themselves and which is connected, in any suitable manner, to the garment at the crotch portion 14 thereof as by stitching or the like, this being illustrated in both Figures 1 and 2.

The upper portion of the apron or fabric sheet, which comprises the supporter or suspensory 22, has connected thereto strips of inelastic tape or the like 24 which are adjustably connected to suitable clamping rings 26 as best shown in Figures 1 and 2, whereby the position and tensioning of the suspensory element 22 can be conveniently adjusted with respect to the garment and also with respect to the body portions of the wearer. The rings 26 are connected to the belt portion 20 of the garment by means of strips of inelastic tape or the like 28.

The side edges 30 of the supporter element are hemmed as best shown in Figure 3, and inside these hems is positioned strips of elastic material such as rubber bands or the like 32 which afford a suitable elastic tensioning action along the edges of the suspensory directed upwardly from the crotch 14, these elastic members 32 being attached by stitching or the like at their lower ends to the crotch portion of the garment.

It will be seen that herein is provided a combination suit of athletic or bathing trunks and a suspensory, which, besides providing a much neater and dressier appearance so far as the wearer of these garments is concerned, also provides a desired support which is quite essential, particularly inasmuch as the wearers of these garments are usually engaged in considerable activity, and a support of this type is quite essential. The adjustable and resilient features provide for still greater comfort and actual utility, and, in addition, provide a neater all-round appearance.

The material of the supporter may be varied as desired. For example, it may be composed of material capable of stretching in both directions, and the means of fastening a supporter to the trunk portion may also be varied as the same may comprise simply a panel stitched to the trunk portion. The trunk portion may also

be composed of this two-way stretch material in whole or in part.

I am aware that many changes may be made and numerous details of construction varied throughout the device herein described, in a wide range, without departing from the principles of the invention, and I, therefore, do not purpose limiting the patent granted hereon otherwise than as necessitated by the prior art.

I claim as my invention:

An athletic garment, including a trunk portion, an inner suspensory element having its lower portion connected to the crotch of the trunks, the suspensory portion being composed of elastic material capable of stretching in more than one direction and particularly on lines between the crotch and belt of the trunks, and resilient elements incorporated into the edges of said suspensory portion, together with non-resilient extensions of said resilient elements and adjustable connections between said extensions and the belt of the trunks, said connections comprising double rings and tapes connecting the rings to the belt, said belt including a hemmed portion and a draw-string therein.

LUCIEN G. BAER.