H. O. BAKER.

ELECTRICALLY HEATED SPRAY VALVE.

APPLICATION FILED MAR. 13, 1918.

1,323,999. Patented Dec. 2. 1919.

Fig. 1.

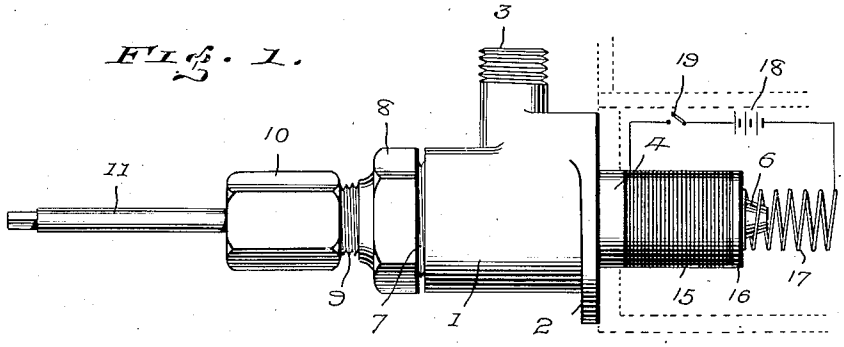

Fig. 2.

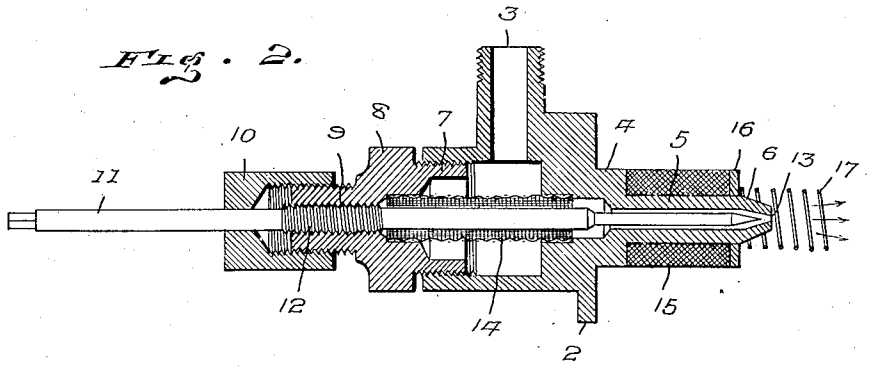

Fig. 3.

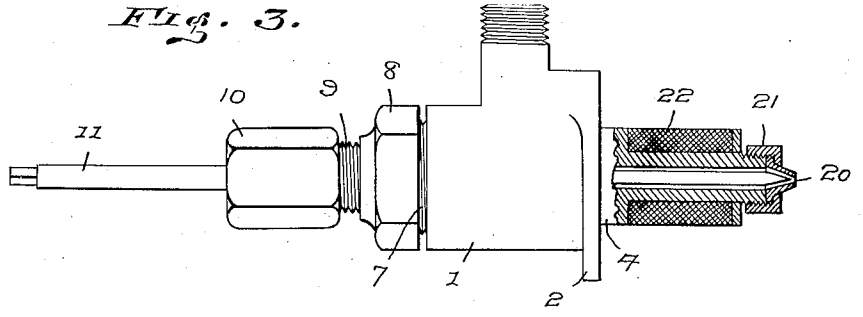

Inventor.
Hartley O. Baker
Fitz Gerald & Co
Attorneys

UNITED STATES PATENT OFFICE.

HARTLEY O. BAKER, OF PUEBLO, COLORADO, ASSIGNOR TO THE BAKER STEAM MOTOR CAR AND MANUFACTURING CO., INC., OF PUEBLO, COLORADO.

ELECTRICALLY-HEATED SPRAY-VALVE.

1,323,999. Specification of Letters Patent. Patented Dec. 2, 1919.

Application filed March 13, 1918. Serial No. 222,153.

To all whom it may concern:

Be it known that I, HARTLEY O. BAKER, a citizen of the United States, residing at Pueblo, in the county of Pueblo and State of Colorado, have invented certain new and useful Improvements in Electrically-Heated Spray-Valves; and I do hereby declare the following to be a full, clear, and exact description of the invention, such as will enable others skilled in the art to which it appertains to make and use the same.

This invention relates to electrically heated needle spray valves, especially designed for use in connection with my steam automobile primary burner and main burner which form the subject matter of respective co-pending applications filed March 25, 1918, and February 26, 1918, Serial Numbers 224,599 and 219,284.

The main object of the invention is to provide means for electrically heating the hydrocarbon prior to its being discharged from the needle valve.

A further object of the invention is to provide the needle valve with an electric heating coil positioned around the spray nozzle whereby the hydrocarbon may be heated and vaporized prior to its discharge from the nozzle.

A further object of the invention is to provide a second heating coil arranged in advance of the nozzle and in axial alinement therewith whereby the air surrounding the discharge end of the nozzle may be heated prior to its admixture with the hydrocarbon as it is shot from the valve nozzle.

A still further object of the invention is to arrange both heating coils in series so that the hydrocarbon will be heated and vaporized prior to its admixture with the heated air adjacent the discharge end of the nozzle.

A still further object of the invention is to provide a simple and inexpensive needle spray valve of the nature indicated which embodies a mimimum number of parts.

With these and other objects in view as will appear as the description proceeds, the invention comprises the various novel features of construction, combination and arrangement of parts as will be more fully described hereinafter and afterward specifically claimed.

Referring to the drawings, Figure 1 represents a side elevation of my improved construction of electrically heated needle spray valve.

Fig. 2 represents a vertical longitudinal sectional view therethrough, and

Fig. 3 represents a sectional elevation of a modified form of valve.

In order that the construction and operation of the invention may be readily comprehended by those skilled in the art to which the invention relates, I have illustrated an approved embodiment thereof in the accompanying drawings and will now proceed to describe the same in connection with said drawings, in which 1 is the valve body provided at one end with a flange 2 and at one side with a laterally projecting threaded nipple 3. A circular shoulder 4 is formed on the end of the valve body and carries a central longitudinally disposed nozzle 5 having a reduced or tapered discharge end 6.

The opposite end of the valve body is internally threaded for the reception of one end of the plug 7, said plug being formed non-circular intermediate its ends as indicated at 8 for the application of a wrench, while the outer end is reduced to form a neck 9 to which is threadedly connected a packing nut 10.

A needle valve rod 11 is disposed longitudinally through the nut 10, plug 7, valve body 1 and the nozzle 5, said valve rod being threaded through the plug 7 as indicated at 12. The forward end of the valve rod coöperates with the discharge orifice 13 of the nozzle.

A tubular strainer 14 is removably positioned within the valve body and plug and is supported thereby concentrically of the valve rod and serves to effectively arrest any foreign matter that may enter the valve with the hydrocarbon.

In order that the hydrocarbon prior to being discharged from the valve may be heated and vaporized, I position a suitable electric heating coil 15 around the nozzle 5 between the shoulder 4 and a disk 16 carried by the nozzle adjacent its outer end.

For desirable and additional heating a coil 17 is positioned around the discharge end of the nozzle and in axial alinement therewith and is connected in series with the heating coil 15. This additional heating coil will effectively serve to heat the surrounding atmosphere prior to the admixture of

the hydrocarbon with it as it is shot from the nozzle, thus producing a combustible gas in a more ready and efficient manner and at the same time tending to eliminate the hissing or roaring sound common to needle spray valves. This result is due to the fact that the electrical heating or resistance coil 17 which surrounds the tip or discharge end of the nozzle and which projects beyond said tip, has its convolutions spaced apart for the passage of air therethrough to the jet of vapor which discharges from the nozzle. Thus, the air in passing to the jet will be heated to attain the desired results.

In the use of the valve the forward end of the nozzle is projected through an opening in the burner casing until the flange 2 rests flush against the outer surface of the burner casing. The heating coils are connected in circuit with a battery 18 and a hand operable switch 19 adapted to be positioned within convenient reach of the motor vehicle driver's seat whereby the operator can at will initially heat and vaporize the hydrocarbon prior to its being discharged into the burners in starting the machine.

In the modification shown in Fig. 3 the nozzle is provided with a detachable tip 20 securely connected to the nozzle by a union nut 21. In this form of valve the additional heating coil 17 as hereinbefore mentioned is dispensed with, the coil 22 being entirely relied upon to effectively heat and vaporize the hydrocarbon within the valve prior to its being discharged or while it is being discharged if found desirable.

While I have described the forms of my invention which I consider to be the best embodiment thereof I desire to have it understood that such changes in construction and arrangement of parts may be made when desired as are within the scope of the appended claims.

Having thus fully described my invention what I claim as new is:

1. A needle valve having a shoulder formed at one end and a spray nozzle projecting centrally therefrom, a needle valve disposed within said nozzle to control the discharge, an electric heating coil positioned around said spray nozzle against said shoulder, a disk positioned at the outer end of said coil and mounted upon said nozzle, and an additional heating coil arranged beyond the discharge end of the spray nozzle and connected in series with the first named heating coil.

2. A spray valve comprising a nozzle for the discharge of fuel, an electrical heating coil on the nozzle between its ends for heating the fuel therein, a needle valve stem entering the nozzle from the rear end and controlling the flow from the discharge end, and a second electrical heating coil surrounding the stream of fuel at the discharge end of the nozzle and having its convolutions spaced apart for the passage of air therethrough to the discharging stream of fuel.

In testimony whereof I have signed my name to this specification in the presence of two subscribing witnesses.

HARTLEY O. BAKER.

Witnesses:
SARA MCKENZIE,
PAULINE S. BROWN.