June 13, 1972 YUGORO KOBAYASHI 3,669,537

AUTOMATIC COPYING AND BINDING MACHINE

Filed Aug. 25, 1970 2 Sheets-Sheet 1

FIG. 1

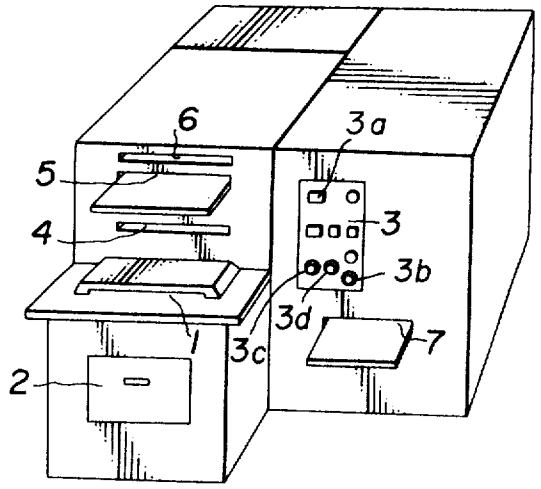

FIG. 2

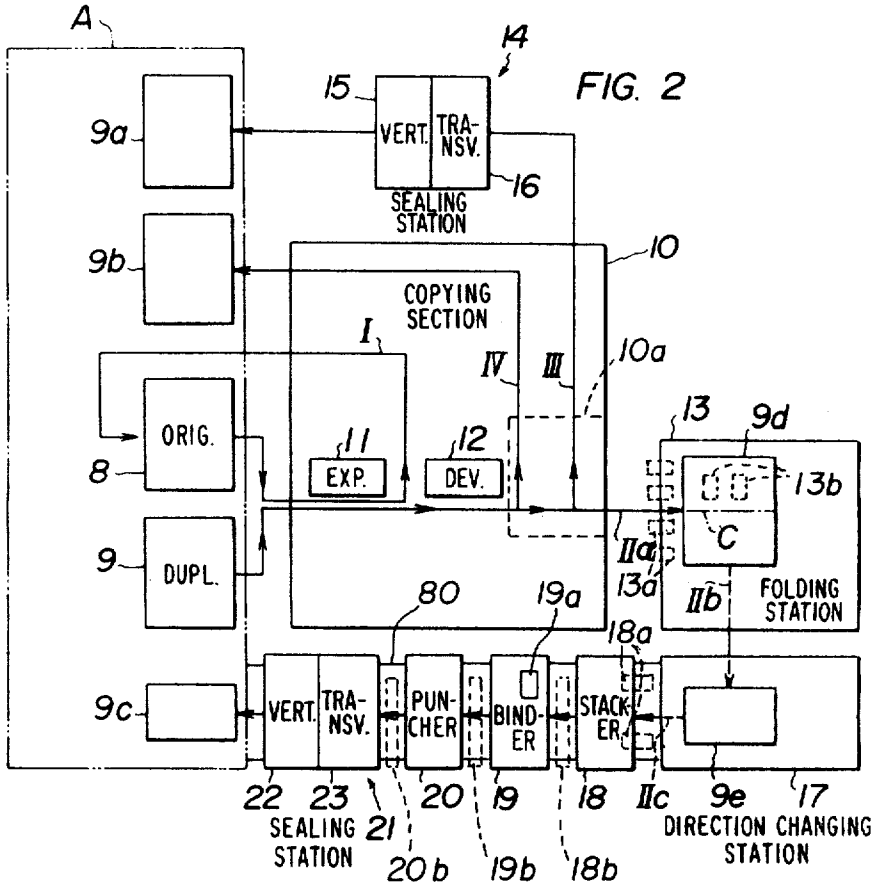

INVENTOR
YUGORO KOBAYASHI

Henry T. Burke
ATTORNEY

AUTOMATIC COPYING AND BINDING MACHINE

Filed Aug. 25, 1970 2 Sheets-Sheet 2

FIG. 3

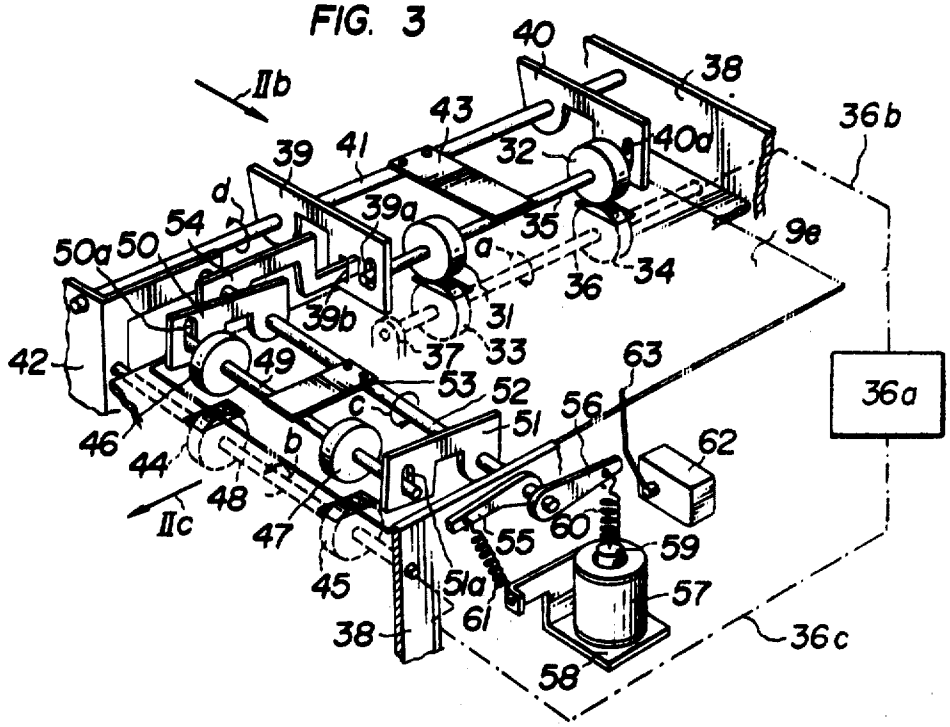

FIG. 4

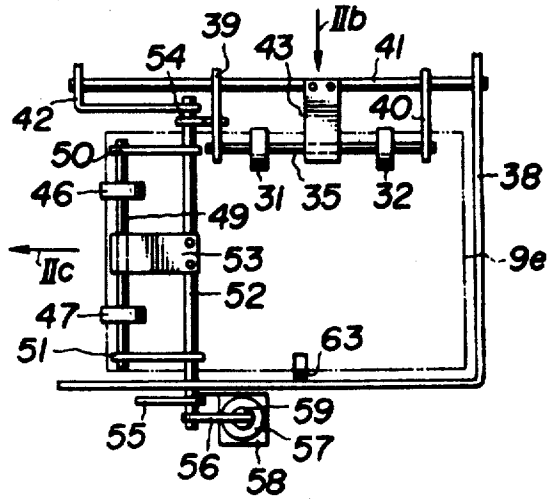

INVENTOR
YUGORO KOBAYASHI

Henry T. Burke
ATTORNEY

United States Patent Office 3,669,537 Patented June 13, 1972

3,669,537

AUTOMATIC COPYING AND BINDING MACHINE

Yugoro Kobayashi, Tokyo, Japan, assignor to Ricoh Co., Ltd., Tokyo, Japan

Filed Aug. 25, 1970, Ser. No. 66,736
Claims priority, application Japan, Aug. 30, 1970, 45/68,803
Int. Cl. G03b 27/62
U.S. Cl. 355—50 10 Claims

ABSTRACT OF THE DISCLOSURE

An automatic copying and binding machine capable of automatically producing duplicates of original documents to be copied and, when necessary, binding the duplicates together. The duplicates produced, either bound or not bound, and the originals from which the duplicates are produced may be stamped or sealed or have other simple clerical operations optionally performed thereon and copies and the original are automatically returned to the operator situated in front of the machine. Suitable means are accordingly disclosed for changing the direction of movement of the original and the copies within the machine, comprising cooperating sets of rollers arranged at right angles to each other and which respectively engage and release the processed sheets in response to the actuation of sensing switch means.

BACKGROUND OF THE INVENTION

The present invention relates to copying machines for producing duplicates of original documents and more particularly to a copying machine which is capable of automatically binding the duplicates to make up a set and supplying the set at the front of the machine.

While there are many copying machines in the market, few, if any, perform more than the simple copying operation with perhaps an added collating operation. However, there is a demand for an automatic copying machine which is capable of not only producing duplicates of originals to be copied but also binding the duplicates together and performing other related clerical tasks automatically.

This invention provides an automatic copying and binding machine which automatically performs simple business tasks and economizes on labor costs in such fields as issuing transcripts and abridged transcripts of census registrations of persons in a particular family and transcripts of registrations of real property and commercial rights and titles by automatically producing duplicates of originals, binding the duplicates together and placing official stamps and other indicia thereon, if necessary.

SUMMARY OF THE INVENTION

The present invention, involves an automatic copying and binding machine comprising a copying mechanism for exposing photosensitive sheets to produce duplicates of originals to be copied, a direction changing device for changing the direction of movement of the duplicates released from the copying mechanism so as to direct the same to a front portion of the machine where the operator is situated, a binding device disposed on the downstream side of said direction changing device for temporarily storing the duplicates delivered thereto so as to bind the duplicates together when all the duplicates making up a set are ready for binding, and control means for actuating said mechanism and devices in chronological sequence in synchronism with the movements of the duplicates through the machine. The machine according to this invention is comparatively compact and simple in construction and is adapted to perform alternative operations

while in each case supplying the desired copy or set of copies to the front of the machine.

Additional features and advantages of this invention will become evident from the description set forth hereinafter when considered in conjunction with the accompanying drawings.

BRIEF DESCRIPTION OF THE DRAWINGS

FIG. 1 is a perspective view of the automatic copying and binding machine comprising one embodiment of this invention;

FIG. 2 is a block diagram of the automatic copying and binding machine of FIG. 1 showing its components and the steps of operation.

FIG. 3 is a perspective view of one form of the direction changing device of the automatic copying and binding machine of FIG. 1; and

FIG. 4 is a plan view of the direction changing device of FIG. 3.

DESCRIPTION OF A PREFERRED EMBODIMENT

The present invention will be described with reference to a preferred embodiment thereof shown in FIG. 1 in the form of an automatic copying and binding machine for producing transcripts and abridged transcripts of census registrations of persons in particular family registers. It is to be understood, however, that though adapted for the purpose mentioned, the automatic copying and binding machine according to this invention can be duplicated and the duplicates produced can be bound together, if necessary.

In FIG. 1, a photosensitive sheet insertion port **2** is disposed below a feed port **1** for the original to be copied. An operation panel **3** is provided on the right side of the original feed port **1** for selecting the particular operation to be performed. An original return port **4**, general duplicate discharge port **5**, and census registration abridged transcript discharge port **6** are provided above the original feed port **1** in the indicated order. A census registration transcript discharge port **7** is provided below the operation panel **3**. It will thus be noted that the insertion of an original to be copied, and the blank sheets of duplicates to be produced, as well as the manipulation of the panel board **3** can be effected by the operator situated in front of the machine. Also, the originals that have been fed to the machine and the duplicates of the originals produced are returned to the operator at the front portion A of the machine.

As shown in FIG. 2, an original **8** is inserted in the port **1** after a main switch **3***a* is actuated, and a photosensitive sheet **9** is inserted in port **2**, and the two are fed to a copying mechanism **10** simultaneously. The copying mechanism **10** includes an exposing section **11** and a developing section **12**, and the original **8** and photosensitive sheet **9** superposed one on top of the other are introduced into the exposing section **11** where the image of the original **8** is formed on the photosensitive sheet **9**. Upon completion of exposure, the original **8** is passed along passageway I and returned to the front portion A through the port **4**.

The copying mechanism **10** may be either a copying apparatus of the diazo type utilizing the photolysis of diazonium salts or an electronic photo-copying machine relying on the photoconductivity of zinc oxide or amorphous selenium and of a conventional construction such as variously disclosed in U.S. Pats. Nos. 3,345,925, 3,380,065, 3,345,925 or 3,475,093. The photosensitive sheet **9** may be of a predetermined size cut previously or may be cut from a web of photosensitive sheet in roll form by cutting means provided in the machine. The manner of travel of the original **8** and the photosensitive sheet

9 and the manner of operation of the exposing and developing steps may be varied by appropriate control means. In the embodiment shown and described herein, the machine will be explained as using a copying apparatus of the diazo type as the printing mechanism **10**.

The photosensitive sheet **9** exposed in the exposing section **11** is delivered to the developing section **12** where it is developed. The developed photosensitive sheet **9** (hereinafter referred to as a duplicate **9***d*) makes up a set with other developed sheets that follow if it is intended to be a sheet of a transcript of the registration of a person in a family register which generally comes in a plurality of pages. Therefore, the duplicate **9***d* is moved along a passageway II*a* to a folding device **13**. However, if the duplicate **9***d* is intended to be an abridged transcription thereof which is usually in one page, it is moved along a passageway III to a sealing device **14** where an official seal is affixed thereto and then discharged through the abridged transcript discharge port **6** in the front portion A. The copying mechanism **10** is able to duplicate anything that may be fed thereto, so that if the original is a document, business letter or any material other than a registration in a registry, the duplicate **9***d* is moved along a passageway IV and discharged through the general duplicate discharge port **5** in the front portion A. The sealing device **14** which may be of any conventional type consists of vertical sealing means **15** and transverse sealing means **16** which are selectively actuated depending on whether the original **8** is written in vertical columns or transverse columns. Either of the means can be actuated by manipulating a control knob **3***b* on the operation panel **3** beforehand. The selection of one of the passages II*a*, III and IV may be made depending on the type of the original **8** by manipulating a control knob **3***c* on the operation panel **3** so as to vary the degree of tilting of a passageway switching plate **10***a* to a suitable level as desired.

Returning to the duplicate **9***d* intended to be a sheet of a transcript of the census registration of a person in a family register, it is fed to the folding device **13** where it is folded in the middle. The folding device **13** may be of the type such as disclosed in Japanese patent publication No. 5,409/1962 dated June 21, 1962 in which a half of the duplicate **9***d* is released from a pair of rollers **13***a* and is fed into a receiving box **13***c* juxtaposed to the pair of rollers and the slackened central portion of the duplicate is gripped and folded by another pair of rollers **13***b*. The duplicate **9***d* is folded in half along its center line (shown in a dash-and-dot line C) so that its upper surface may form the outer surfaces of a folded duplicate **9***e*. In the folding device **13**, the duplicate is moved at right angles to the passageway II*a* so that the folded duplicate **9***e* may be moved along a passageway II*b*. The direction of movement of the folded duplicate **9***e* is changed by 90° at a direction changing device **17** so that the folded duplicate **9***e* is now moved along a passageway II*c* toward the front portion A of the machine. The construction of the direction changing device **17** will be explained with reference to FIGS. 3 and 4.

In FIG. 3, rollers **31** and **32** firmly fixed to a shaft **35** are maintained in engagement with rollers **33** and **34** respectively firmly fixed on shaft **36**. The two shafts **35** and **36** are disposed one above the other with their axes being disposed at right angles to the passageway II*b*, so that the rollers **31**, **32**, **33** and **34** perform the function of conveying a duplicate **9***e* in the same direction as the passageway II*b*. The shaft **36** supporting the rollers **33** and **34** is rotatably supported by an immovable wall member **37** and a side wall **38** of the machine. The shaft **36** is connected, at its outer end, to a drive mechanism (**36***a*) through a chain **36***b* or the like. The shaft **36** normally rotates in the direction of the arrow *a* when the main switch **3***a* is closed. The shaft **35** supporting the rollers **31** and **32** has opposite end portions which

are loosely fitted in slots **39***a* and **40***a* formed in arms **39** and **40** respectively which are firmly fixed at their bases to a shaft **41**. The shaft **41** is rotatably supported at opposite ends by the side wall **38** and an immovable wall member **42** and has a central portion which mounts a leaf spring **43** urging the shaft **35** to move downwardly by its biasing force.

In FIG. 3, the passageway II*c* is disposed at right angles to the passageway II*b* and rollers **44** and **45** and rollers **46** and **47** adapted to come into engagement with each other are disposed in the entrance to the passageway II*c*. The rollers **44** and **45**, and **46** and **47** are mounted on shafts **48** and **49**, respectively, which are disposed one above the other with their axes being disposed at right angles to the passageway II*c*, so that the rollers **44**, **45**, **46** and **47** perform the function of conveying the duplicate in the same direction as the passageway II*c*. The shaft **48** is rotatably supported by the side wall **38** and immovable wall member **42** and connected, at its outer end, to the drive mechanism **36***a* for the shaft **36** through a chain **36***c* or the like. The shaft **48** normally rotates in the direction of the arrow *b*. The shaft supporting the rollers **46** and **47** has opposite end portions which are loosely fitted in slots **50***a* and **51***a* formed in arms **50** and **51** which are firmly fixed at their bases to a shaft **52**. The shaft **52** is also rotatably supported at opposite ends by the side wall **38** and immovable wall member **42**. The shaft **52** has a central portion which mounts a leaf spring **53** urging the shaft **49** to move downwardly by its biasing force. Mounted near the end of the shaft **52** on the side of the arm **50** is an engaging arm **54** which has a forward end loosely fitted in a slot **39***b* formed in the arm **39** which supports the rollers **31** and **32**. Firmly secured to the shaft **52** near the end thereof on the side of the side wall **38** are arms **55** and **56** which face in opposite directions. Disposed below the arms **55** and **56** is a solenoid **57** which is supported by a support plate **58** firmly fixed to the side wall **38**. An actuator **59** for the solenoid **57** is connected to the free end of the arm **56** through a tension spring **60**. The free end of the arm **55** is urged to move downwardly by the biasing force of a tension spring **61**. Thus, the shaft **52** is urged to rotate in the direction of the arrow *c* when the solenoid **57** is inoperative. If the shaft **52** rotates in the direction of the arrow *c*, then the arms **50** and **51** and the leaf spring **53** are urged to move in the same direction, so that the rollers **46** and **47** remain in engagement with the rollers **44** and **45** respectively. The engaging arm **54** is also urged to move in the same direction and thereby move the arm **39** upwardly. This causes the rollers **31** and **32** to move upwardly out of engagement with the rollers **33** and **34**, respectively against the spring **43** which thus causes the shaft **41** to rotate in the direction of the arrow *d*.

The solenoid **57** is connected to a normally closed switch **62** and maintained operative at all times when the main switch **62** is closed. When the solenoid **57** is operative, the arm **56** is pulled by the actuator **59**, so that the shaft **52** is urged to rotate in a direction opposite to the direction *c* in which it is normally urged to rotate. This brings the rollers **46** and **47** out of engagement with the rollers **44** and **45** respectively and the rollers **31** and **32** into engagement with the rollers **33** and **34** respectively. This state continues while the switch **62** remains closed.

Assuming that the folded duplicate **9***e* is introduced from the passageway II*b* into the direction changing device which is in the state described, it is gripped by the rollers **31**, **32** and **33** and **34** maintained in contact with each other and moved further ahead. An actuator **63** for the switch **62** is disposed in front of the rollers **31**, **32**, **33** and **34**, so that when the actuator **63** is moved by the duplicate **9***e* the switch **62** is opened and the solenoid **57** is rendered inoperative. When the solenoid **57** is rendered inoperative, then the rollers **31** and **32** are brought out of engagement with the rollers **33** and **34** respectively and

the rollers **44** and **45** are brought into engagement with the rollers **46** and **47** respectively.

The relative positions of the passageway II*b* and the rollers **31**, **32**, **33** and **34** are such that when the duplicate **9***e* is gripped by the rollers **31**, **32**, **33** and **34** it is moved forwardly while its left end portion as seen in FIG. 4 is disposed between the rollers **46**, **47** and **44**, **45** out of engagement with each other. The actuator **63** for the switch **62** is disposed such that it is pushed by the duplicate **9***e* when the duplicate is correctly disposed relative to the passageway II*c* (see FIG. 4). Accordingly, if the duplicate **9***e* positioned as shown in FIG. 4 pushes the actuator **63** of the switch **62**, then the solenoid **57** is deenergized and the duplicate is gripped in that position by the rollers **44**, **45** and **46**, **47** and introduced into the passageway II*c*. As aforesaid, the passageway II*c* is disposed at right angles to the passageway II*b* and faces the forward portion A of the machine as shown in FIG. 2. The duplicate **9***e* having its direction of movement changed at the direction changing device **17** is introduced into a temporary storage device **18** where it is held till the following sheets of duplicates of the same set are delivered. When the duplicates **9***e* in a predetermined number of sheets are piled in a stack in the device **18**, they are moved to a binding device **19** in a stack. When the duplicate **9***e* having its direction of movement changed in the direction changing device **17** is introduced into the temporary storage device **18**, its folded edge is pressed with a strong force by a pair of duplicate conveying rollers (**18***a*) disposed in the passageway II*c* on the upstream side of the device **18**. The pair of rollers is disposed at right angles to the folded edge, so that the pressure per unit area applied by the rollers to the folded edge of the duplicate is very high. Accordingly, the folded edge of each duplicate sheet is pressed flat without any crease so that a stack of several sheets of duplicates has a very small thickness without becoming fluffy.

The temporary storage device **18** may be of any conventional type and include, for example, a stopper (**18***b*) adapted to move in and out of the passageway II*c*. The stopper operates such that it remains in the passageway II*c* when the duplicates **9***e* are disposed in the device **18**, but when the last sheet of duplicate is delivered to the device **18** the stopper moves out of the passageway II*c* to let all the sheets of duplicates move ahead.

The binding device **19** may be a conventional electric stapler (**19***a*) for stapling all the sheets of duplicates forming a set which are stopped temporarily in the device **19**. It is to be understood that if the binding device **19** includes a stopper **19***b* the temporary storage device **18** may be done without unless otherwise required.

The set of sheets of duplicates **9***e* bound together at the binding device **19** is then forwarded to an alteration prevention device **20** where the duplicates **9***e* may be punched, perforated or imprinted to prevent them from being tampered with. The device **20** includes a stopper **20***b*. A conventional numeral puncher may be used as the alteration prevention device **20**. The set of duplicates **9***e* is then moved to a conventional sealing device **21** where either the vertical sealing means **22** or transverse sealing means **23** is actuated, as set beforehand, by manipulating a control knob **3***d* on the panel **3**, so that an official seal can be affixed either longitudinally or vertically in accordance with the arrangement of the columns in the particular original **8**. The set of duplicates **9***e* to which an official seal has been affixed is discharged through the transcript discharge port **7** in the front portion A of the machine as a transcript **9***c* of the registration of the particular person in his family register.

The temporary storage device **18**, binding device **19**, alteration prevention device **20** and sealing device **21** may be operated by means of control cams, or the like, which are actuated by signals produced by a detection means (such as switch **62**). Upon detection of the last duplicate sheet of a number of duplicates forming a set solenoid, such as **57**, mounted in the devices are similarly operated so that the devices may be actuated in a chronological sequence which may be set beforehand. After being released from the direction changing device **17**, the duplicates are conveyed between devices by a conventional roller conveyor **80** which is rendered operative at all times after the main switch is closed.

From the foregoing description, it will be appreciated that the automatic copying and binding machine according to this invention offers many advantages. The provision of the direction changing device on the downstream side of the folding device permits a transcript or abridged transcript of the census registration of a person in his family register to be discharged in the front portion of the machine where the original has been fed to the machine. Besides, the provision of the sealing device in the machine eliminates the manual operation of affixing an official seal to each transcript after it is discharged from the copying machine. Thus, the present invention economizes on labor and simplifies business procedures in providing a transcription or abridged transcription of a census registration or similar type of records or documents.

The provision of the direction changing device in the machine offers an additional advantage in that it permits the binding device and alteration prevention device to be disposed parallel to the path of movement of the duplicate, toward the front of the machine. The folded duplicate is fed with its folded edge being disposed at right angles to the roller conveyor, so that folding can be effected positively and readily.

While the automatic copying and binding machine according to this invention has been described as being used for producing a transcript or abridged transcript of the census registration of a person in his family register, it is to be understood that the machine can be used for producing a duplicate of any material and binding the duplicates thus produced as well as performing other suitable clerical operations automatically.

Further, the direction changing device may be used throughout the machine to direct the processed documents to the front such as in the case of the original and the abridged transcripts.

I claim:

1. An automatic copying and binding machine comprising a copying means for exposing photosensitive sheets to produce duplicates of originals to be copied, direction changing means for changing the direction of movement of the originals and duplicates released from the copying means so as to direct the same to a front portion of the machine in front of which the operator is situated, a binding means disposed on the downstream side of said direction changing means for temporarily storing the duplicates delivered thereto so as to bind the duplicates when all the duplicates making up a set are ready for binding, a sealing means for affixing an official seal to said duplicates in a predetermined position prior to the discharge of the duplicates from the machine, and control means for actuating the aforesaid means in chronological sequence in synchronism with the movement of the duplicates through the machine.

2. An automatic copying and binding machine as claimed in claim **1** wherein said direction changing device comprises a roller conveyor consisting of a plurality of sets of rollers arranged such that their axes cross one another, and means for causing said rollers to open successively in synchronism with the movements of the duplicates.

3. An automatic copying machine of the type having:

(a) means on the front for accepting an original document to be copied and a photosensitive sheet to act as the duplicate document;

(b) copying means wherein the photosensitive sheet is exposed to produce a duplicate of the original document;

(c) means for transporting the original and duplicate documents from the accepting means into the copying means and out of the copying means after the exposure;

wherein the improvement comprises:

(d) means for transporting the documents after exiting from said copying means back to the front of the machine said transporting means including:

(i) a first cooperating set of rollers;

(ii) means for pressing said first set of rollers together for engaging and transporting a document therebetween transversely with respect to their rotational axes;

(iii) a second set of cooperating rollers arranged with their rotational axes normal to the rotational axes of said first set of rollers and such that the edge of a document being transported by said first set of rollers will pass therebetween;

(iv) means for pressing said second set of rollers together for engaging and transporting a document therebetween transversely with respect to their rotational axes; and

(v) switch means actuated by said document after being transported a predetermined distance by said first set of rollers to release said first roller set pressing means and actuate said second roller set pressing means to change the direction of transportation of said document.

4. A machine as in claim **3** including:

(f) means for receiving and stacking successive documents whose direction of transportation has been changed; and

(g) means for binding a stack of said documents after a predetermined number have been received.

5. A machine as in claim **3** including means for sealing documents whose direction of transportation has been changed.

6. A machine as in claim **3** including means on the front of said machine for controlling said copying means and said transporting means.

7. A machine as in claim **3**, comprising means for folding said documents.

8. A machine as in claim **3**, wherein one roller in a cooperating set is mounted on a fixed axis and the other roller is mounted on a pivotable axis.

9. A machine as in claim **3**, comprising solenoid means for actuating said pressing means.

10. A machine as in claim **3**, wherein said switch means comprises a lever arm positioned at a point corresponding to said predetermined distance for engagement with said transported document.

References Cited

UNITED STATES PATENTS

2,627,203	2/1953	Hessert	355—48
2,995,242	8/1961	Branscomb	209—110

SAMUEL S. MATTHEWS, Primary Examiner

R. A. WINTERCORN, Assistant Examiner

U.S. Cl. X.R.

209—110; 271—9; 355—64, 75