(12) UK Patent (19) GB (11) 2 267 169 (13) B

(54) Title of Invention

Operating environment setting system and method of setting the operating environment

(51) INT CL[5]; B41J 29/393, G06F 3/12

(21) Application No
9309883.8

(22) Date of filing
13.05.1993

(30) Priority Data

(31) 04148248

(32) 14.05.1992

(33) JP

(43) Application published
24.11.1993

(45) Patent published
13.09.1995

(52) Domestic classification
(Edition N)
G4H HGN HQD HQG H1A
H13D H14D

(56) Documents cited
GB2227112 A
GB2155674 A
EP0076328 A1
US5024544 A
US4836699 A

(58) Field of search

As for published application
2267169 A *viz:*
UK CL(Edition L) G3N NG1A1
NG1A3 NG1A9, G4A AFGDC,
G4H HGN HQD HQG HTAN
HTAR HTAT
INT CL[5] B41J, G06F
updated as appropriate

Additional Fields
INT CL[5] G06K

(72) Inventor(s)
Takashi Kato
Katsuhiko Nizhizawa

(73) Proprietor(s)
Seiko Epson Corporation

(Incorporated in Japan)

4-1 Nishi-Shinjuku
2-chome
Shinjuku-ku
Tokyo 163
Japan

(74) Agent and/or
Address for Service
J Miller & Co
34 Bedford Row
Holborn
London
WC1R 4JH
United Kingdom

226716

FIG. 1

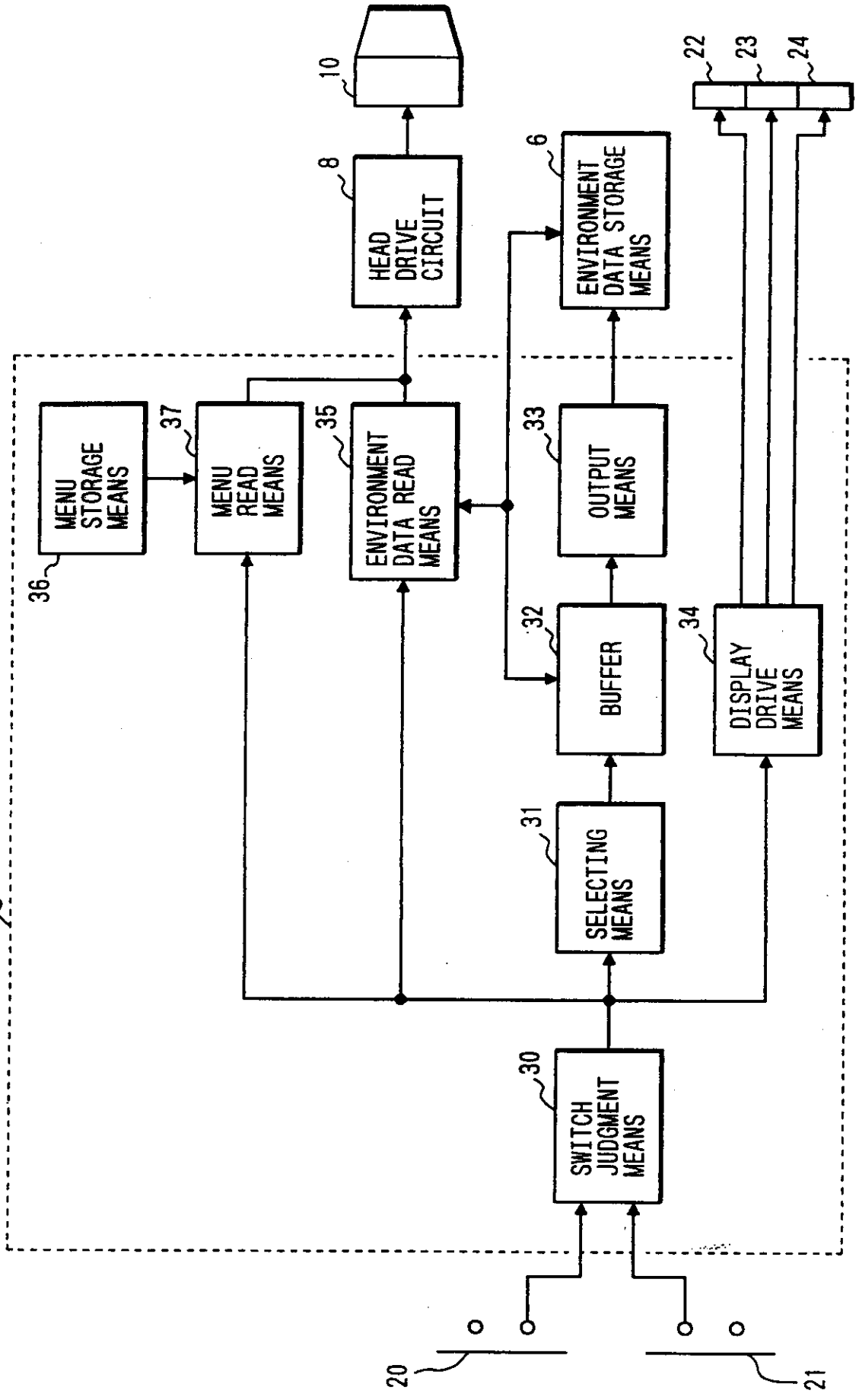
29
10
8
HEAD DRIVE CIRCUIT
6
ENVIRONMENT DATA STORAGE MEANS
22
23
24
MENU STORAGE MEANS
36
37
MENU READ MEANS
35
ENVIRONMENT DATA READ MEANS
33
OUTPUT MEANS
32
BUFFER
34
DISPLAY DRIVE MEANS
31
SELECTING MEANS
30
SWITCH JUDGMENT MEANS
20
21

FIG. 2

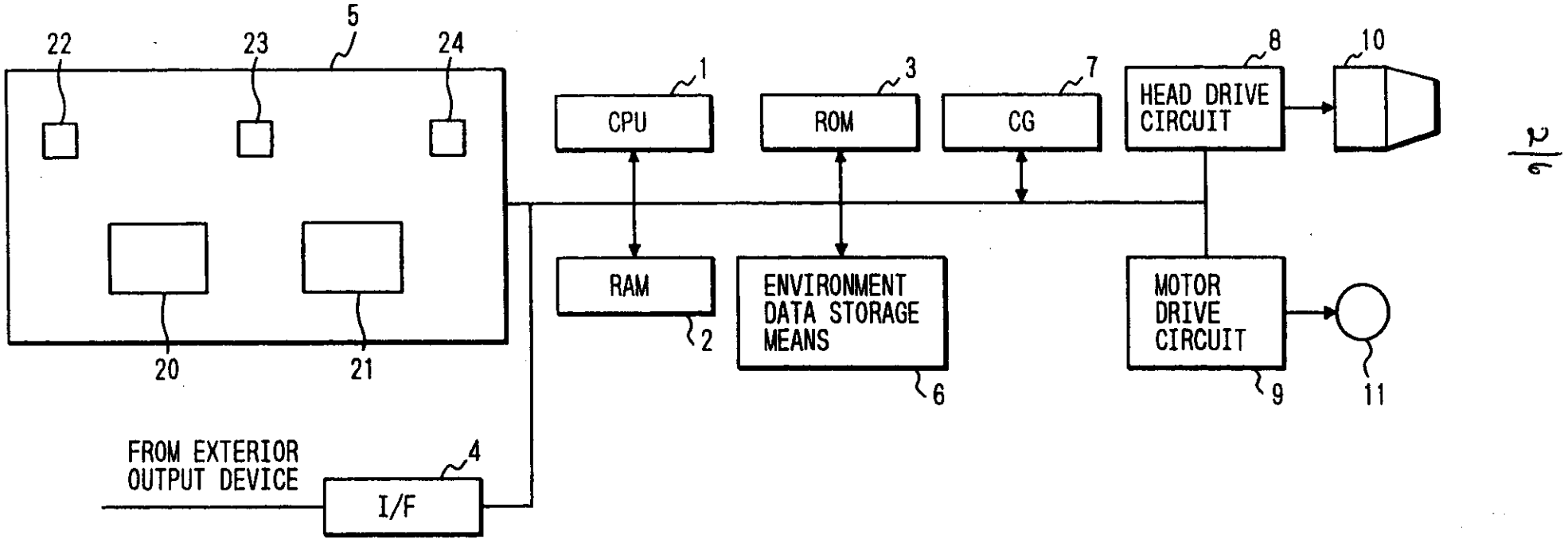
5
22
23
24
20
21
CPU
1
ROM
3
CG
7
HEAD DRIVE CIRCUIT
8
10
RAM
2
ENVIRONMENT DATA STORAGE MEANS
6
MOTOR DRIVE CIRCUIT
9
11
FROM EXTERIOR OUTPUT DEVICE
I/F
4

FIG. 3

DISPLAY 1	DISPLAY 2	READY DISPLAY	SELECTABLE ITEM	SELECTABLE DETAILS
OFF	ON	OFF	Emulation	ESC/P
		ON		IBM Proprinter
OFF	BLINK	OFF	Character pitch	Pica
		ON		Elite
ON	OFF	OFF	Page length group	〈A〉 11inch, 12inch
		ON		〈B〉 8.5inch, 70/6inch
ON	ON	OFF	Page length	〈A〉 11inch
		ON		〈A〉 12inch
		OFF		〈B〉 8.5inch
		ON		〈B〉 70/6inch [A4]
ON	BLINK	OFF	Skip perforation	No skip
		ON		Skip 1 inch
BLINK	OFF	OFF	Zero face	0
		ON		0 with slash
BLINK	ON	OFF	Automatic tear-off	Valid
		ON		Invalid
BLINK	BLINK	OFF	Automatic LF by CR	Depend on I/F
		ON		Valid

FIG. 4

DISPLAY 1	DISPLAY 2	READY DISPLAY	CHARACTER TABLE
OFF	OFF	ON	Italic-U. S. A.
OFF	OFF	BLINK	Italic-France
OFF	ON	OFF	Italic-Germany
OFF	ON	ON	Italic-U. K.
OFF	ON	BLINK	Italic-Denmark 1
OFF	BLINK	OFF	Italic-Sweden
OFF	BLINK	ON	Italic-Italy
OFF	BLINK	BLINK	Italic-Spain 1
ON	OFF	OFF	PC 437
ON	OFF	ON	PC 850
ON	OFF	BLINK	PC 860
ON	ON	OFF	PC 863
ON	ON	ON	PC 865

FIG. 5

DISPLAY 1	DISPLAY 2	READY DISPLAY	UPPER MARGIN
OFF	OFF	ON	-3
OFF	OFF	BLINK	-2
OFF	ON	OFF	-1
OFF	ON	ON	±0
OFF	ON	BLINK	+1
OFF	BLINK	OFF	+2
OFF	BLINK	ON	+3

FIG. 6

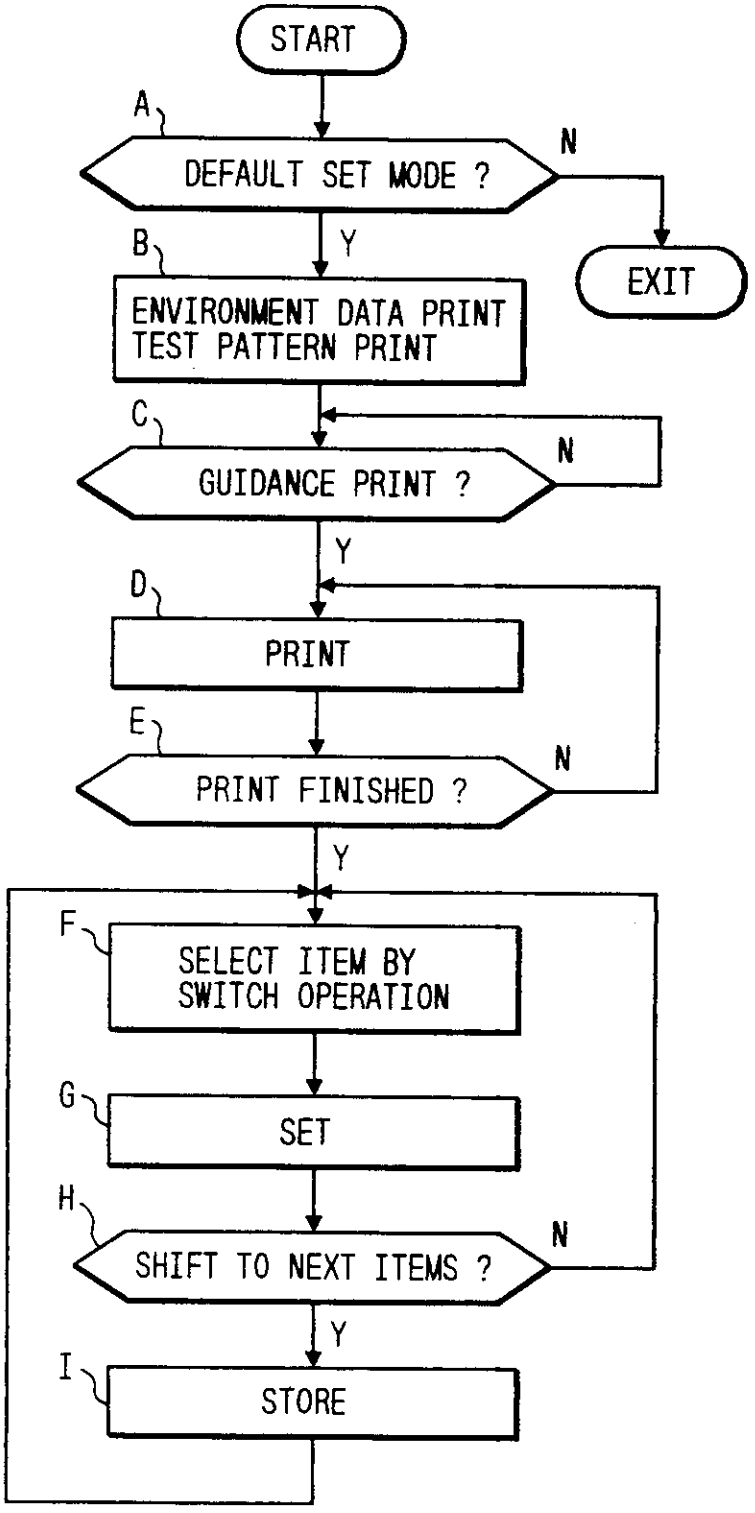
START
A
DEFAULT SET MODE ?
N
EXIT
Y
B
ENVIRONMENT DATA PRINT
TEST PATTERN PRINT
C
GUIDANCE PRINT ?
N
Y
D
PRINT
E
PRINT FINISHED ?
N
Y
F
SELECT ITEM BY
SWITCH OPERATION
G
SET
H
SHIFT TO NEXT ITEMS ?
N
Y
I
STORE

FIG. 7

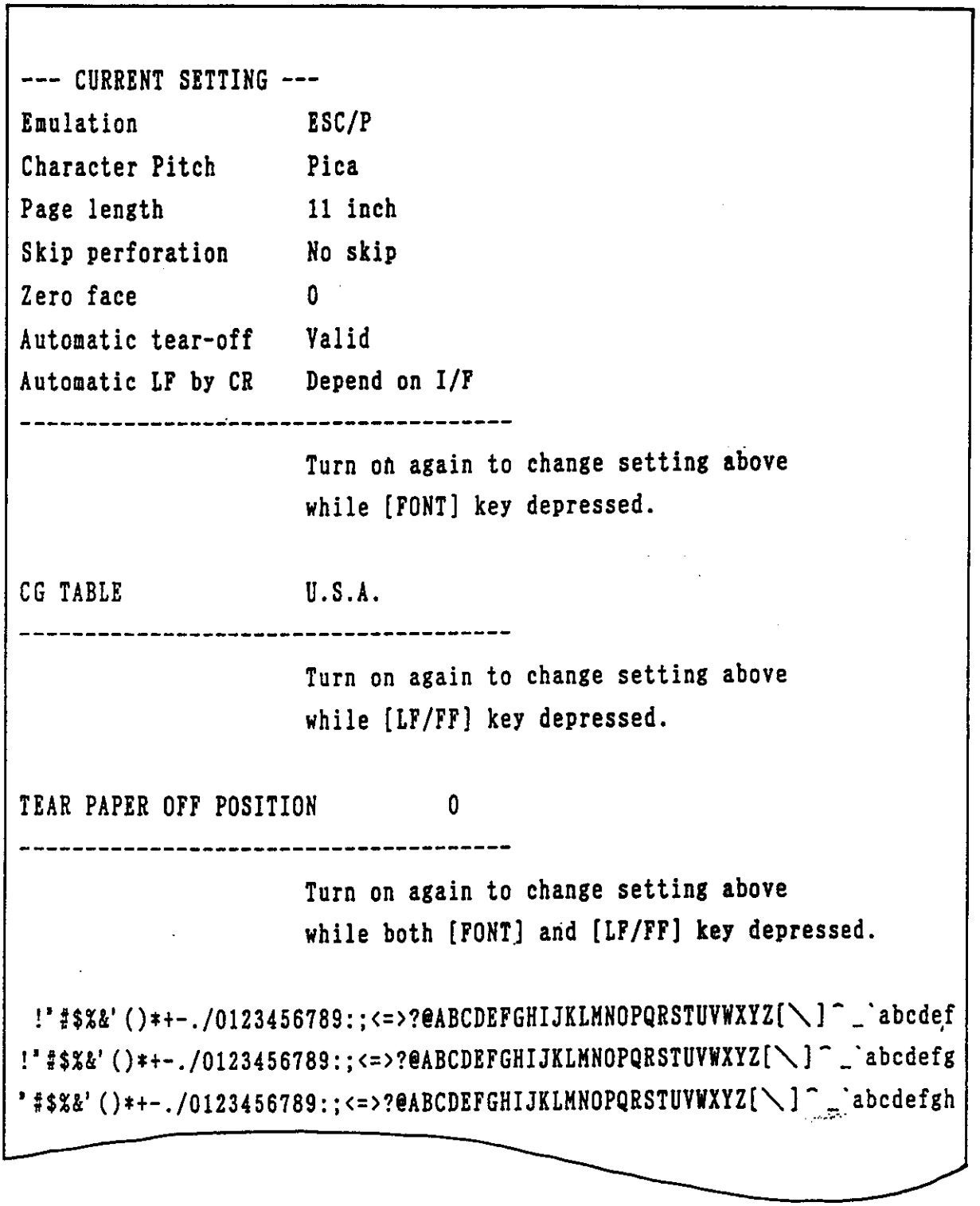
--- CURRENT SETTING ---
Emulation ESC/P
Character Pitch Pica
Page length 11 inch
Skip perforation No skip
Zero face 0
Automatic tear-off Valid
Automatic LF by CR Depend on I/F
Turn on again to change setting above
while [FONT] key depressed.
CG TABLE U.S.A.
Turn on again to change setting above
while [LF/FF] key depressed.
TEAR PAPER OFF POSITION 0
Turn on again to change setting above
while both [FONT] and [LF/FF] key depressed.
!"#$%&'()*+-./0123456789:;<=>?@ABCDEFGHIJKLMNOPQRSTUVWXYZ[\]^_`abcdef
!"#$%&'()*+-./0123456789:;<=>?@ABCDEFGHIJKLMNOPQRSTUVWXYZ[\]^_`abcdefg
"#$%&'()*+-./0123456789:;<=>?@ABCDEFGHIJKLMNOPQRSTUVWXYZ[\]^_`abcdefgh

2267169

OPERATING ENVIRONMENT SETTING SYSTEM AND METHOD OF SETTING THE OPERATING ENVIRONMENT

The present invention relates to an environment setting systems and method of setting the operating environment. In particular, the method is suitable for a recording apparatus such as a printer, which is used to set functions so that the recording apparatus can be interfaced with different types of computer or other equipment.

It is desirable that a printer is designed to be flexible so that a variety of types of data output units can be interfaced therewith. That is to say, the printer should be capable of operating with a plurality of different types or sets of print format-related data, such as the page length of the recording paper, etc., as well as different serial interface protocols, printer control codes and characters codes. Switches and jumpers are also provided so that the user can select the desired functions.

However, during manufacture of the printer, a number of steps are required in wiring these switches and mounting the switch parts, thereby increasing costs and reducing reliability.

To overcome these problems, a printer control system has been proposed which comprises a software switch implemented to use, for example, the printer's sheet forward switch and paper discharge switch, which are otherwise necessarily provided to control the printer's operations. (See Japanese Patent Examined Publication No. 10974/1990).

This system allows a display or a default setting switch to be dispensed with, thus reducing costs and improving reliability. On the other hand, the system disadvantageously requires a printing operation to be carried out each time an item is set or changed, thereby impairing the operability of the printer.

The present invention has been made in view of the above circumstances. Accordingly, an object of the present invention is to provide an operating environment setting system, suitable for an apparatus such as a printer with the smallest and simplest

possible display device, yet which is excellent in operability and which dispenses with the printing operation during the setting procedures.

To achieve the above and other objections, the present invention provides a number of switches for selecting basic functions of the apparatus; environment data storage means for storing operating environment items; display means; menu storage means for storing a menu in which said environment setting items are correlated with display conditions of said display means; and means for printing said menu; whereby an environment item stored in said environment data storage means is changed by pressed selected ones of said switches, said display means displays the result in the form of display conditions of said display means.

Also the present invention provides a method of setting an operating environment for a printer comprising:

storing in said printer a plurality of environment setting items for establishing an operating environment of said printer;

storing in said printer a menu containing states of said operating environment setting items correlated with display conditions of display means of said printer;

placing said printer in an operating environment setting state;

printing said menu with said printer;

operating at least one of a plurality of switches for selecting basic functions of said printer to select one of said environment setting items to be changed;

displaying display conditions indicative of the state of the selected one of said environment setting items;

operating said switches to change said selected one of said environment setting items in a desired state by comparing said display conditions with display conditions on the printed menu; and

storing the changed selected one of said environment setting items.

Prior to the setting of an environment item, the relationship between the display conditions of the display means and a setting item is printed on a recording sheet as a

menu. Since this menu includes the description of the relationship between the display conditions of the display means and setting items, a desired environment item can be selected by changing the display condition of the display means so as to match the setting item using the switches.

Embodiments of the present invention will now be described with reference to the accompanying drawings, of which:

Figure 1 is a block diagram showing an operating environment setting system for a printer, which is constructed in accordance with a preferred embodiment of the present invention;

Figure 2 is a block diagram showing an exemplary printer to which the operating environment setting system of the invention is applied;

Figure 3 is a diagram showing an exemplary hard copy of the data stored as a guide;

Figure 4 is another exemplary hard copy of the data stored as a guide;

Figure 5 is still another exemplary hard copy of the data stored as a guide;

Figure 6 is a flowchart showing an operation of the operating environment setting system shown in Figure 1; and

Figure 7 is a diagram showing exemplary data to be printed at the time of setting defaults.

Preferred embodiments of the present invention will now be described in detail with reference to the drawings.

Figure 2 is a diagram showing the overall configuration of an operating environment setting system constructed in accordance with a preferred embodiment of the invention. In Figure 2, reference numeral 1 designates a CPU which functions as a controller. The CPU constitutes a microcomputer together with a RAM 2 and a ROM 3 for storing control programs. An external data output unit through an interface 4 and switches for selecting the basic functions of the printer, such as a font selecting switch 20, a sheet forwarding switch 21, and a plurality of displays 22, 23 and 24 are connected

to the CPU 1. The displays are implemented with light-emitting diodes or the like. The switches and the displays constitute a control panel 5.

Reference numeral 6 designates environment data storage means, which is constituted by an electrically erasable semiconductor memory. The environment data storage means erasably stores data specifying the basic functions of the printer, such as emulation data for decoding control codes of the external data output unit, types of character patterns used at the time of printing, sizes of recording paper, and margins.

Reference numeral 7 designated a character generator for converting data inputted through the interface 4 into dot matrix data. The character generator 7 is formed by storing a plurality of character fonts as necessary.

Reference numerals 8 and 9 designate a head drive circuit and a motor drive circuit, respectively. These circuits are respectively employed to drive a recording head 10 and a motor 11 of a recording paper handling mechanism, such as a sheet forwarding mechanism, based on the data from the microcomputer.

Figure 1 is a block diagram showing the functions performed by the microcomputer. The microcomputer is programmed so as to implement switch judgement means 30 for judging the state of the switches 20 and 21 in the default set mode at the time the power is turned on; selecting means 31 for selecting an environment to be set by a signal sent from the switch judgement means 30; a buffer 32 for temporarily storing set data; output means 33 for causing the environment data storage means 6 to store the data in the buffer 32 at the time the environment data is set; display drive means 34 for driving the displays 22, 23 and 24 so as to correspond to the condition of the switches 20 and 21; environment data reading means 35 for reading the data stored in the environment data storage means 6 at the time the environment is set; and menu reading means 37 for reading data from a menu storage means 36 (described later) at the time the environment is set.

The data stored in the menu storage means 36 will be described next.

Figures 3, 4 and 5 show the data stored in the menu storage means 36. Figure 3 shows the basic operation items with the state of the displays 22, 23 & 24 for each item.

Such items include a selection of control codes of the printer, character pitch, page length, sheet forward mode at the time of printing on successive paper, typeface of the zero character "0", and the sheet forward code signals. Figure 4 shows the relationship between the displays 22, 23 and 24 that select font data if the character generator 7 has a plurality of kinds of font data. Figure 5 shows data defining the relationship between the upper margin which can be selected and the displays 22, 23 and 24.

The operation of the thus-configured system will be described with reference to the flowchart shown in Figure 6.

When a power switch (not shown) of the main body of the printer has been turned on, the switch judgement means 30 judges whether a function switch, such as the font selecting switch 20, is set to the default set mode (Step A), whereupon a sheet of recording paper is loaded to a recording paper handling mechanism. When the function switch is not set to the default set mode, the data stored in the environment data storage means 6 is read as an initial value to operate the printer. Upon completion of the preparatory work for printing, the environment data stored in the environment data storage means 6 is read, and the read data is stored in the buffer 32 and outputted to the recording head. Then, a test chart suitable for checking the print quality is printed (Step B) by pressing the font selecting switch.

By the operation, the current environment data followed by a test pattern for checking the character and print quality are printed on recording paper, as shown in Figure 7, and provided to the operator.

To change the CURRENT SETTING under this condition, the function switches, such as the font selecting switch 20, are pressed (Step C). Then, the menu read means 36 reads the menu data related to the CURRENT SETTING stored in the menu storage means 36. This data is printed on the recording paper by the recording head 10 as a guide so that the setting items can be selected in combination with the display conditions of the displays 22, 23 and 24. In other words the desired combination of "ON", "OFF", and "BLINK" states as shown in Figure 3 (Step D). After the menu has been printed (Step E), the display conditions of the displays 22, 23 and 24 corresponding to the

desired item to be set, are reviewed while referring to the printed menu, and the switches 20 and 21 are operated to obtain the desired display conditions (Step F).

Specifically, the display condition of the displays 22 and 23 can be changed every time the font selecting switch 20 is pressed, and the display condition of the display 24 can be changed every time the sheet forwarding switch 21 is pressed.

For example, to change the character set from "Pica", which is the current setting, to "Elite", the font selecting switch 20 is continuously pressed until the display 22 is held "OFF" and the display 23 is set to "BLINK". At this point, the display 22 is held "OFF" and the display 23 is set in the "BLINK" state, but the display 24 is held "OFF" since "Pica" is set as the current setting. Then, the sheet forwarding switch 21 is pressed to change the display 24 to "ON", so that the character pitch item in the buffer 32 is set to "Elite" (Step G).

When the desired item has been set in this way and the function switches have been pressed to shift the display condition of the displays 22, 23 and 24 to the next items (Step H), the last data is stored in the environment data storage means 6 from the buffer 32 (Step I).

Upon completion of setting the CURRENT SETTING operation, the power switch of the printer is turned off and on to reset the printer. As a result, the printer performs its operations with the new data stored in the environment data setting storage means 6 as a default.

If the sheet forwarding switch 21 is pressed in Step C, the printer outputs a guide relating to the character generator TABLE shown in Figure 4, whereas if the font selecting switch 20 and the sheet forward switch 21 are pressed at the same time, the printer outputs a guide related to "Paper Tear Off Position". Operation of the other switches thus permits the operator to change the setting by a similar operation to the font selecting switch 20 and the sheet forwarding switch 21.

While the font selecting switch 20 and the sheet forwarding selecting switch 21 and the three displays 22, 23 and 24 are used in this embodiment, other switches and displays provided on the printer may be used. Other embodiments may thus increase not

only the number of switches but also the number of displays involved in setting the defaults. In addition, the same advantages can be obtained by using a display device having a plurality of display areas provided on a single display surface, such as a liquid crystal display panel.

As described above, the present invention is characterised by including a number of switches for selecting basic functions of the apparatus; environment data storage means for storing operating environment items; display means; menu storage means for storing a menu in which said environment setting items are correlated with display conditions of said display means; and means for printing said menu; whereby an environment item stored in said environment data storage means is changed by pressed selected ones of said switches, said display means displays the result in the form of display conditions of said display means. Thus, the various setting items can be outputted as a hard copy. Preferably, the selection of setting items is specified by the display means provided on a panel. As a result, selecting the setting by operating the switches can be performed by referring to the menu prepared in advance, and the environment setting can be effected easily with the provision of minimal display means. Further, in contrast to the conventional technique involving an interactive operation of setting items, only selected items may be changed, thus allowing not only the setting time to be reduced, but also the setting contents to be simplified.

The aforegoing description has been given by way of example only and it will be appreciated by a person skilled in the art that modifications may be made without departing from the scope of the present invention.

CLAIMS

1. An operating environment setting system for an apparatus comprising:

a number of switches for selecting basic functions of the apparatus; environment data storage means for storing operating environment items; display means; menu storage means for storing a menu in which said environment setting items are correlated with display conditions of said display means; and means for printing said menu; whereby an environment item stored in said environment data storage means is changed by pressed selected ones of said switches, said display means displays the result in the form of display conditions of said display means.

2. An operating environment setting system as claimed in claim 1, in which said apparatus comprises a printer and wherein said switches comprise a font selecting switch and a sheet forwarding switch

3. An operating environment setting system as claimed in claim 1 or 2, wherein said display means comprises a plurality of LEDs.

4. An operating environment setting system as claimed in any one of claims 1 to 3, wherein said display conditions are "ON", "OFF" and "BLINK".

5. A method of setting an operating environment for a printer comprising:

storing in said printer a plurality of environment setting items for establishing an operating environment of said printer;

storing in said printer a menu containing states of said operating environment setting items correlated with display conditions of display means of said printer;

placing said printer in an operating environment setting state;

printing said menu with said printer;

operating at least one of a plurality of switches for selecting basic functions of said printer to select one of said environment setting items to be changed;

displaying display conditions indicative of the state of the selected one of said environment setting items;

operating said switches to change said selected one of said environment setting items in a desired state by comparing said display conditions with display conditions on the printed menu; and

storing the changed selected one of said environment setting items.

6. An operating environment setting system substantially as shown in or as hereinbefore described with reference to Figure 1 or 2.

7. An operating environment setting system substantially as shown in or as hereinbefore described with reference to Figure 1 or 2 and any one of Figures 3 to 6.

8. A method of setting an operating environment substantially as shown or as hereinbefore described with reference to figure 6.

REGISTER ENTRY FOR GB2267169

Form 1 Application No GB9309883.8 filing date 13.05.1993

Priority claimed:
14.05.1992 in Japan - doc: 04148248

Title OPERATING ENVIRONMENT SETTING SYSTEM AND METHOD OF SETTING THE OPERATING ENVIRONMENT

Applicant/Proprietor
SEIKO EPSON CORPORATION, Incorporated in Japan, 4-1 Nishi-Shinjuku, 2-chome, Shinjuku-ku, Tokyo 163, Japan [ADP No. 05608948001]

Inventors
TAKASHI KATO, SEIKO EPSON CORPORATION, 3-5 Owa 3-chome, Suwa-shi, Nagano-ken, Japan [ADP No. 06334775001]

KATSUHIKO NIZHIZAWA, SEIKO EPSON CORPORATION, 3-5 Owa 3-chome, Suwa-shi, Nagano-ken, Japan [ADP No. 06334783001]

Classified to
G4H
B41J G06F

Address for Service
J MILLER & CO, 34 Bedford Row, Holborn, LONDON, WC1R 4JH, United Kingdom [ADP No. 00001149002]

Publication No GB2267169 dated 24.11.1993

Examination requested 24.11.1993

Patent Granted with effect from 13.09.1995 (Section 25(1)) with title OPERATING ENVIRONMENT SETTING SYSTEM AND METHOD OF SETTING THE OPERATING ENVIRONMENT

**** END OF REGISTER ENTRY ****

RENEWAL DETAILS

PUBLICATION NUMBER GB2267169

PROPRIETOR(S)

Seiko Epson Corporation, Incorporated in Japan, 4-1 Nishi-Shinjuku, 2-chome, Shinjuku-ku, Tokyo 163, Japan

DATE FILED 13.05.1993

DATE GRANTED 13.09.1995

DATE NEXT RENEWAL DUE 13.05.1997

DATE NOT IN FORCE

DATE OF LAST RENEWAL

YEAR OF LAST RENEWAL 00

STATUS PATENT IN FORCE

**** END OF REPORT ****